Right choice for ultimate yield

LSIS strives to maximize customers' profit in gratitude of choosing us for your partner.

Programmable Logic Controller

Positioning Module

XGT Series

User's Manual

XGF-PO1H XGF-PD1H
XGF-PO2H XGF-PD2H
XGF-PO3H XGF-PD3H
XGF-PO4H XGF-PD4H

Safety Instructions

- Read this manual carefully before installing, wiring, operating, servicing or inspecting this equipment.
- Keep this manual within easy reach for quick reference.

LS Industrial Systems

http://eng.lsis.biz

Before using the product …

For your safety and effective operation, please read the safety instructions thoroughly before using the product.

- Safety Instructions should always be observed in order to prevent accident or risk with the safe and proper use the product.

- Instructions are divided into “Warning” and “Caution”, and the meaning of the terms is as follows.

⚠ ***Warning***	This symbol indicates the possibility of serious injury or death if some applicable instruction is violated
⚠ ***Caution***	This symbol indicates the possibility of severe or slight injury, and property damages if some applicable instruction is violated

Moreover, even classified events under its caution category may develop into serious accidents relying on situations. Therefore we strongly advise users to observe all precautions properly just like warnings.

- The marks displayed on the product and in the user’s manual have the following meanings.

  ⚠ Be careful! Danger may be expected.

  ⚠ Be careful! Electric shock may occur.

- The user’s manual even after read shall be kept available and accessible to any user of the product.

Safety Instructions for design process

⚠ Warning

- ***Please install a protection circuit on the exterior of PLC so that the whole system may operate safely regardless of failures from external power or PLC.*** Any abnormal output or operation from PLC may cause serious problems to safety in whole system.
  - Install protection units on the exterior of PLC like an interlock circuit that deals with opposite operations such as emergency stop, protection circuit, and forward/reverse rotation or install an interlock circuit that deals with high/low limit under its position controls.
  - If any system error (watch-dog timer error, module installation error, etc.) is detected during CPU operation in PLC, all output signals are designed to be turned off and stopped for safety. However, there are cases when output signals remain active due to device failures in Relay and TR which can't be detected. Thus, you are recommended to install an addition circuit to monitor the output status for those critical outputs which may cause significant problems.
- ***Never overload more than rated current of output module nor allow to have a short circuit***. Over current for a long period time maycause a fire .
- ***Never let the external power of the output circuit to be on earlier than PLC power***, which may cause accidents from abnormal output oroperation.
- ***Please install interlock circuits in the sequence program for safe operations in the system when exchange data with PLC or modify operation modes using a computer or other external equipments*** Read specific instructions thoroughly when conducting control operations with PLC.

Safety Instructions for design process

⚠ Caution

- ***I/O signal or communication line shall be wired at least 100mm away from a high-voltage cable or power line.*** Fail to follow this

Safety Instructions on installation process

⚠ Caution

- ***Use PLC only in the environment specified in PLC manual or general standard of data sheet.*** If not, electric shock, fire, abnormal operation of the product may be caused.
- ***Before install or remove the module, be sure PLC power is off.*** If not, electric shock or damage on the product may be caused.
- ***Be sure that every module is securely attached after adding a module or an extension connector.*** If the product is installed loosely or incorrectly, abnormal operation, error or dropping may be caused. In addition, contact failures under poor cable installation will be causing malfunctions as well.
- ***Be sure that screws get tighten securely under vibrating environments.*** Fail to do so will put the product under direct vibrations which will cause electric shock, fire and abnormal operation.
- ***Do not come in contact with conducting parts in each module***, which may cause electric shock, malfunctions or abnormal operation.

Safety Instructions for wiring process

⚠ Warning

- ***Prior to wiring works, make sure that every power is turned off.*** If not, electric shock or damage on the product may be caused.
- ***After wiring process is done, make sure that terminal covers are installed properly before its use.*** Fail to install the cover may cause electric shocks.

⚠ Caution

- ***Check rated voltages and terminal arrangements in each product prior to its wiring process.*** Applying incorrect voltages other than rated voltages and misarrangement among terminals may cause fire or malfunctions.
- ***Secure terminal screws tightly applying with specified torque.*** If the screws get loose, short circuit, fire or abnormal operation may be caused. Securing screws too tightly will cause damages to the module or malfunctions, short circuit, and dropping.
- ***Be sure to earth to the ground using Class 3 wires for FG terminals which is exclusively used for PLC***. If the terminals not grounded correctly, abnormal operation or electric shock may be caused.
- ***Don't let any foreign materials such as wiring waste inside the module while wiring,*** which may cause fire, damage on the product or abnormal operation.
- ***Make sure that pressed terminals get tighten following the specified torque. External connector type shall be pressed or soldered using proper equipments.***

Safety Instructions for test-operation and maintenance

⚠ Warning

- ***Don't touch the terminal when powered***. Electric shock or abnormal operation may occur.
- ***Prior to cleaning or tightening the terminal screws, let all the external power off including PLC power.*** If not, electric shock or abnormal operation may occur.
- ***Don't let the battery recharged, disassembled, heated, short or soldered***. Heat, explosion or ignition may cause injuries or fire.

⚠ Caution

- ***Do not make modifications or disassemble each module.*** Fire, electric shock or abnormal operation may occur.
- ***Prior to installing or disassembling the module, let all the external power off including PLC power.*** If not, electric shock or abnormal operation may occur.
- ***Keep any wireless equipment such as walkie-talkie or cell phones at least 30cm away from PLC***. If not, abnormal operation may be caused.
- ***When making a modification on programs or using run to modify functions under PLC operations, read and comprehend all contents in the manual fully.*** Mismanagement will cause damages to products and accidents.
- ***Avoid any physical impact to the battery and prevent it from dropping as well.*** Damages to battery may cause leakage from its fluid. When battery was dropped or exposed under strong impact, never reuse the battery again. Moreover skilled workers are needed when exchanging batteries.

Safety Instructions for waste disposal

⚠ Caution

- ***Product or battery waste shall be processed as industrial waste.*** The waste may discharge toxic materials or explode itself.

Revision History

Version	Date	Remark	Revised position
V 1.0	’09. 8	First Edition	-
V 1.1	’10.4	“Read/Write Variable Data (XVRD, XVWR)” added	Ch6.3.36~6.3.37 Ch7.4.9~7.4.10 Ch9.7.4, App. 3
		Encoder main axis function added to CAM operation	Ch6.3.15,Ch7.7.4
		Connector pin arrary modified	Ch2.3.3, Ch3.3.2 App2.2
V 1.2	’10.7	Position specifed speed/position switching control added (XVTPP, XPM_VTPP)	Ch6.2, Ch6.3.9 Ch7.2, Ch7.8.6 Ch8.1.6, Ch8.2.6 Ch9.2.15
V 1.3	’13.3	Connection example of LS Mecapion added	Ch3.3.2
		Infinite running repeat added	Ch4
		Position-specified speed override coordinate added	Ch4
		Speed/Position switching coordinate added	Ch4
		Setting position output added	Ch4, Ch6, Ch7, Ch8 Ch9
		Main axis offset-specified CAM operation added	Ch6, Ch7, Ch9
		Restart added	Ch6, Ch7
		User CAM operation	Ch9, Appendix 3

※ The number of User’s manual is indicated right part of the back cover.

ⓒ LSIS Co., Ltd 2010 All Rights Reserved.

About User's Manual

Congratulations on purchasing PLC of LS Industrial System Co.,Ltd.

Before use, make sure to carefully read and understand the User's Manual about the functions, performances, installation and programming of the product you purchased in order for correct use and importantly, let the end user and maintenance administrator to be provided with the User's Manual.

The User's Manual describes the product. If necessary, you may refer to the following description and order accordingly. In addition, you may connect our website (http://eng.lsis.biz/) and download the information as a PDF file.

Relevant User's Manuals

Title	Description	No. of User's Manual
XG5000 IEC User's Manual	It describes how to use XG5000 software, which it is applied to the IEC standard language, especially about online functions such as programming, printing, monitoring and debugging by using XGT series products.	10310000834
XGK/XGB Instructions & Programming User's Manual	It is the user's manual for programming to explain how to use commands that are used PLC system with XGK/XGB CPU.	10310000833
XGI CPU User's Manual	It describes CPU specifications and technical terms for the XGT PLC system using a series of XGI CPU module.	10310000832
XGR CPU User's Manual	It describes CPU specifications and technical terms for the XGT PLC system using a series of XGR CPU module.	10310000855

◎ Table of Contents ◎

Chapter 1 Overview……. 1-1 ~ 1-12
1.1 Characteristics....1 - 1
1.2 Purpose of Positioning Control ....1 - 3
1.3 Signal Flow of Positioning Module.... 1 - 4
1.4 Function Overview of Positioning Module ....1 - 5
1.4.1 Positioning Control ....1 - 5
1.4.2 Interpolation Control ....1 - 6
1.4.3 Speed Control ....1 - 11
1.4.4 FEED Control ....1 - 12

Chapter 2 Specification……. 2-1 ~ 2-11
2.1 General Specification ....2 - 1
2.2 Performance Specifications....2 - 2
2.2.1 Function Specifications ....2 - 2
2.3 External Interface I/O Specifications ....2 - 4
2.3.1 Input Specifications ....2 - 4
2.3.2 Output Specifications ....2 - 5
2.3.3 External Equipment and Interface Specification .... 2 - 6
2.4 The Name of Each Part ....2 - 9
2.4.1 The Name of Each Part ....2 - 9
2.5 Connection of XGT Servo System ....2 - 10
2.5.1 Connection of Open Collector ....2 - 10
2.5.2 Connection of Line Driver .... 2 - 11

Chapter 3 Operation Order and Installation……. 3-1 ~ 3-24
3.1 Operation Order....3 - 1
3.2 Installation ....3 - 2
3.2.1 Installation Environment .... 3 - 2
3.2.2 Notice in Handling ....3 - 2
3.3 Notice in Wiring .... 3 - 3
3.3.1 Notice in Wiring ....3 - 3
3.3.2 Connection Example of Servo and Stepping Motor Drive Machine ....3 - 4
3.3.3 Encoder Input (DC 5V Voltage Output) Wiring Example .... 3 - 23
3.3.4 Encoder Input (DC 5V Line Driver Output) Wiring Example ....3 - 24

Chapter 4 Positioning Parameter & Operation Data……. 4-1 ~ 4-42
4.1 Parameter & Operation Data .... 4 - 1
4.2 Basic Parameter .... 4 - 2
4.2.1 Basic Parameter ....4 - 2

4.2.2 Basic Parameter Setting ..... 4 - 3
4.3 Expansion Parameter ..... 4 - 7
4.3.1 Contents of Expansion Parameter ..... 4 - 7
4.3.2 Expansion Parameter Setting ..... 4 - 8
4.4 Manual Operation Parameter ..... 4 - 25
4.4.1 Manual Operation Parameter ..... 4 - 25
4.4.2 Manual Operation Parameter Setting ..... 4 - 25
4.5 Homing Parameter ..... 4 - 27
4.5.1 Homing Parameter ..... 4 - 27
4.5.2 Homing Parameter Setting ..... 4 - 28
4.6 I/O Signal Parameter ..... 4 - 31
4.6.1 I/O Signal Parameter ..... 4 - 31
4.6.2 Setting Range of I/O Signal Parameter ..... 4 - 31
4.7 Common Parameter ..... 4 - 32
4.7.1 Common Parameter ..... 4 - 32
4.7.2 Common Parameter Setting ..... 4 - 32
4.8 Operation Data ..... 4 - 37
4.8.1 Operation Data ..... 4 - 37
4.8.2 Operation Data Setting ..... 4 - 38

Chapter 5 Internal Memory and I/O Signal ..... 5-1 ~ 5-11
5.1 Internal Memory ..... 5 - 1
5.1.1 Step Data during Point Start ..... 5 - 1
5.1.2 Teaching Data ..... 5 - 2
5.1.3 Step Data of Simultaneous Start ..... 5 - 3
5.1.4 State Information ..... 5 - 4
5.2 I/O Signal ..... 5 - 9
5.2.1 Contents of I/O Signal ..... 5 - 9
5.2.2 Use of I/O Signal ..... 5 - 10

Chapter 6 Command ..... 6-1 ~ 6-56
6.1 Contents of General Command ..... 6 - 1
6.1.1 Internal Memory Read (GET, GETP Command) ..... 6 - 1
6.1.2 Internal Memory Write (PUT, PUTP Command) ..... 6 - 2
6.2 Dedicated Commands ..... 6 - 3
6.3 Use of Dedicated Command ..... 6 - 5
6.3.1 Homing Start (Command: XORG) ..... 6 - 6
6.3.2 Floating origin setting (Command: XFLT) ..... 6 - 7
6.3.3 Direct start (Command: XDST) ..... 6 - 8
6.3.4 Indirect start (Command: XIST) ..... 6 - 9
6.3.5 Simultaneous start (Command: XSST) ..... 6 - 10
6.3.6 Simultaneous Start Step Setting (Command: XSWR) ..... 6 - 11
6.3.7 Ellipse start (Command: XELIN) ..... 6 - 12
6.3.8 Speed/Position Switching Control (Command: XVTP) ..... 6 - 13
6.3.9 Position specified Speed/Position Switching Control (Command: XVTPP) ..... 6 - 14

6.3.10 Position/Speed Switching Control (Command: XPTV) ..... 6 - 15
6.3.11 Deceleration Stop (Command: XSTP) ..... 6 - 16
6.3.12 Skip Operation (Command: XSKP) ..... 6 - 17
6.3.13 Synchronous Start by Position (Command: XSSP) ..... 6 - 18
6.3.14 Synchronous Start by Speed (Command: XSSS) ..... 6 - 19
6.3.15 Speed synchronous start by position (Command: XSSSP) ..... 6 - 20
6.3.16 CAM Operation (Command: XCAM) ..... 6 - 21
6.3.17 Main axis offset-designated CAM Operation (Command: XCAMO) ..... 6 - 22
6.3.18 Position Override (Command: XPOR) ..... 6 - 23
6.3.19 Speed Override (Command: XSOR) ..... 6 - 24
6.3.20 Position Assigned Speed Override (Command: XPSO) ..... 6 - 25
6.3.21 Continuous Operation (Command: XNMV) ..... 6 - 26
6.3.22 Inching Operation (Command: XINCH) ..... 6 - 27
6.3.23 Return to the Previous Manual Operation Position (Command: XRTP) ..... 6 - 28
6.3.24 Start Step No. Change (Command: XSNS) ..... 6 - 29
6.3.25 Repeat Step No. Change (Command: XSRS) ..... 6 - 29
6.3.26 M Code Release (Command: XMOF) ..... 6 - 30
6.3.27 Current Position Preset (Command: XPRS) ..... 6 - 31
6.3.28 Encoder Preset (Command: XEPRS) ..... 6 - 31
6.3.29 Teaching Array (Command: XTEAA) ..... 6 - 32
6.3.30 Teaching Array Data Setting (Command: XTWR) ..... 6 - 33
6.3.31 Basic Parameter Teaching (Command: XSBP) ..... 6 - 34
6.3.32 Extended Parameter Teaching (Command: XSEP) ..... 6 - 36
6.3.33 Homing Parameter Teaching (Command: XSHP) ..... 6 - 39
6.3.34 Manual Operation Parameter Teaching (Command: XSMP) ..... 6 - 41
6.3.35 I/O Signal Parameter Teaching (Command: XSES) ..... 6 - 42
6.3.36 Common Parameter Teaching (Command: XSCP) ..... 6 - 43
6.3.37 Operation Data Teaching (Command: XSMD) ..... 6 - 44
6.3.38 Read Variable Data (Command: XVRD) ..... 6 - 46
6.3.39 Write Variable Data (Command: XVWR) ..... 6 - 48
6.3.40 Parameter/Operation Data Save (Command: XWRT) ..... 6 - 49
6.3.41 Emergency Stop (Command: XEMG) ..... 6 - 49
6.3.42 Error Reset (Command: XCLR) ..... 6 - 50
6.3.43 Error History Reset (Command: XECLR) ..... 6 - 50
6.3.44 POINT Start (Command: XPST) ..... 6 - 51
6.3.45 POINT Start Step Data Setting (Command: XPWR) ..... 6 - 52
6.3.46 Operation State Read (Command: XSRD) ..... 6 - 54
6.3.47 Restart (Command: XRSTR) ..... 6 - 55
6.3.48 Setting Position Signal Output Enable/Disable (Command: XPOE) ..... 6 - 56

Chapter 7 Function Block ..... 7-1 ~ 7-59
7.1 Common Issues of Function Block ..... 7 - 1
7.2 Function Block of Positioning Module ..... 7 - 3
7.3 Function Block related to Module Information Read ..... 7 - 5
7.3.1 Operation Information Read (XPM_CRD) ..... 7 - 6

7.3.2 Operation State Read (XPM_SRD) ..... 7 - 7
7.3.3 Encoder Value Read (XPM_ENCRD) ..... 7 - 9
7.4 Parameter/Operation Data Teaching Function Block ..... 7 - 10
7.4.1 Basic Parameter Teaching (XPM_SBP) ..... 7 - 10
7.4.2 Extended Parameter Teaching XPM_SEP) ..... 7 - 12
7.4.3 Homing Parameter Teaching (XPM_SHP) ..... 7 - 14
7.4.4 Manual Operation Parameter Teaching (XPM_SMP) ..... 7 - 16
7.4.5 I/O Signal Parameter Teaching (XPM_SIP) ..... 7 - 17
7.4.6 Common Parameter Teaching (XPM_SCP) ..... 7 - 15
7.4.7 Operation Data Teaching (XPM_SMD) ..... 7 - 19
7.4.8 Teaching Array (XPM_ATEA) ..... 7 - 21
7.4.9 Read Variable Data (XPM_VRD) ..... 7 - 23
7.4.10 Write Variable Data (XPM_VWR) ..... 7 - 24
7.4.11 Saving Parameter/Operation Data (XPM_WRT) ..... 7 - 25
7.5 Start/Stop Function Block ..... 7 - 26
7.5.1 Homing Start (XPM_ORG) ..... 7 - 26
7.5.2 Direct Start (XPM_DST) ..... 7 - 27
7.5.3 Indirect Start (XPM_IST) ..... 7 - 28
7.5.4 Ellipse Interpolation (XPM_ELIN)) ..... 7 - 29
7.5.5 Simultaneous Start (XPM_SST) ..... 7 - 30
7.5.6 Point Start (XPM_PST) ..... 7 - 31
7.5.7 Deceleration Stop (XPM_STP) ..... 7 - 32
7.5.8 Emergency Stop (XPM_EMG) ..... 7 - 33
7.5.9 Restart (XPM_RSTR) ..... 7 - 34
7.5.10 Setting Position Output Enable/Disable (XPM_POE) ..... 7 - 35
7.6 Manual Operation Function Block ..... 7 - 36
7.6.1 JOG Operation (XPM_JOG) ..... 7 - 36
7.6.2 Inching Operation (XPM_INC) ..... 7 - 37
7.6.3 Returning to Previous Manual Operation Position (XPM_RTP) ..... 7 - 38
7.7 Synchronization Start Function Blocks ..... 7 - 39
7.7.1 Position Synchronization (XPM_SSP) ..... 7 - 39
7.7.2 Speed Synchronization (XPM_SSS) ..... 7 - 40
7.7.3 Position Assigned Speed Synchronization (XPM_SSSP) ..... 7 - 41
7.7.4 CAM Operation (XPM_CAM) ..... 7 - 42
7.7.5 Main Axis offset-specified CAM Operation (XPM_CAMO) ..... 7 - 43
7.8 Modification Function Block ..... 7 - 44
7.8.1 Position Override (XPM_POR) ..... 7 - 44
7.8.2 Speed Override (XPM_SOR) ..... 7 - 45
7.8.3 Position Assigned Speed Override (XPM_PSO) ..... 7 - 46
7.8.4 Position/Speed Switching Control (XPM_PTV) ..... 7 - 47
7.8.5 Speed/Position Switching Control (XPM_VTP) ..... 7 - 48
7.8.6 Position specified Speed/Position Switching Control (XPM_VTPP) ..... 7 - 49
7.8.7 Skip Operation (XPM_SKP) ..... 7 - 50
7.8.8 Continuous Operation (XPM_NMV) ..... 7 - 51
7.8.9 Start Step Change (XPM_SNS) ..... 7 - 52
7.8.10 Repeat Step Number Change (XPM_SRS) ..... 7 - 53

7.8.11 Current Position Change (XPM_PRS) ..... 7 - 54
7.8.12 Encoder Value Preset (APM_EPRE) ..... 7 - 55
7.9 Error Function Blocks ..... 7 - 56
7.9.1 Error Reset (XPM_RST) ..... 7 - 56
7.9.2 Error History Reset (XPM_HRST ..... 7 - 57
7.10 Other Function Blocks ..... 7 - 58
7.10.1 Floating Origin Setting (XPM_FLT) ..... 7 - 58
7.10.2 M Code Release (XPM_MOF) ..... 7 - 59

Chapter 8 Program ..... 8-1 ~ 8-119
8.1 Examples of XGK Program ..... 8 - 1
8.1.1 General Description ..... 8 - 1
8.1.2 Current State Read ..... 8 - 1
8.1.3 Operating Test ..... 8 - 3
8.1.4 Parameter and Operation Data Setting ..... 8 - 8
8.1.5 Positioning Operation ..... 8 - 16
8.1.6 Operation Setting Change while Operating ..... 8 - 37
8.1.7 Error ..... 8 - 51
8.2 Examples of XGI Program ..... 8 - 53
8.2.1 General Description ..... 8 - 53
8.2.2 Current State Read ..... 8 - 53
8.2.3 Operation Test ..... 8 - 58
8.2.4 Parameter and Operation Data Setting ..... 8 - 64
8.2.5 Positioning Operation ..... 8 - 73
8.2.6 Operation Setting Change while Operating ..... 8 - 100
8.2.7 Error ..... 8 - 118

Chapter 9 Function ..... 9-1 ~ 9-164
9.1 Homing ..... 9 - 1
9.1.1 Homing Method ..... 9 - 1
9.1.2 Parameter for Homing ..... 9 - 1
9.1.3 Origin Detection after Near Point off ..... 9 - 2
9.1.4 Origin Detection after Deceleration when Near Point on ..... 9 - 4
9.1.5 Origin Detection by origin and High/Low Limit ..... 9 - 5
9.1.6 Origin Detection by Near Point ..... 9 - 6
9.1.7 High Speed Homing ..... 9 - 7
9.1.8 Origin Detection by High/Low Limit ..... 9 - 8
9.1.9 Origin Detection by Origin ..... 9 - 9
9.2 Positioning Control ..... 9 - 11
9.2.1 Operation Data for Positioning Control ..... 9 - 12
9.2.2 Operation mode of Positioning Control ..... 9 - 13
9.2.3 Shortening Position Control ..... 9 - 27
9.2.4 Shortening Speed Control ..... 9 - 29
9.2.5 Shortening Feed Control ..... 9 - 31
9.2.6 Linear Interpolation Control with 2 axes ..... 9 - 32

9.2.7 Linear Interpolation Control with 3 axes .....9 - 43
9.2.8 Linear Interpolation Control with 4 axes .....9 - 51
9.2.9 Designate Midpoint of Circular Interpolation .....9 - 52
9.2.10 Circular interpolation control of designating midpoint .....9 - 58
9.2.11 Circular interpolation control with designated radius .....9 - 67
9.2.12 Helical Interpolation Control .....9 - 75
9.2.13 Ellipse Interpolation Control .....9 - 78
9.2.14 Speed/Position Switching Control .....9 - 82
9.2.15 Speed/Position Switching Control .....9 - 84
9.2.16 Position/Speed Switching Control .....9 - 86
9.2.17 Start of Positioning .....9 - 88
9.2.18 Positioning Stop .....9 - 92
9.2.19 Setting position output .....9 - 100
9.3 Manual Operation Control .....9 - 103
9.3.1 JOG Operation .....9 - 103
9.3.2 Inching Operation .....9 - 107
9.3.3 Returning to the previous position of manual operation .....9 - 109
9.4 Synchronous Control .....9 - 111
9.4.1 Speed Synchronous Control .....9 - 111
9.4.2 Position synchronous control .....9 - 117
9.4.3 CAM Operation .....9 - 120
9.4.4 User CAM Operation .....9 - 129
9.5 Modification Function of Control .....9 - 130
9.5.1 Floating Origin Setting .....9 - 130
9.5.2 Continuous Operation .....9 - 131
9.5.3 Skip Operation .....9 - 133
9.5.4 Position Override .....9 - 135
9.5.5 Speed Override .....9 - 138
9.5.6 Positioning Speed Override .....9 - 140
9.5.7 Current Position Preset .....9 - 143
9.5.8 Encoder Preset .....9 - 144
9.5.9 Start Step Number Change .....9 - 145
9.5.10 Repeat Operation Step Number Change .....9 - 146
9.6 Auxiliary functions of Control .....9 - 148
9.6.1 High/Low Limit .....9 - 148
9.6.2 M Code .....9 - 151
9.7 Data Modification Function .....9 - 153
9.7.1 Teaching Array .....9 - 153
9.7.2 Parameter Change from Program .....9 - 155
9.7.3 Data Change from Program .....9 - 161
9.7.4 Write/Read Variable Data .....9 - 163

Appendix 1 Positioning Error Information & Solutions ..... A1-1~ A1-13
Appendix 1 Positioning Error Information & Solutions A1-1

Appendix 2 Difference Comparison with Formal Product …….....……..… A2-1~ A2-3
Appendix 2.1 Functional Difference A2-1
Appendix 2.2 Pin Array of Connector A2-3

Appendix 3 Module Internal Memory Address of “Read/Write Variable Data” command .....A3-1~ A3-85

Chapter 1 Overview

This user's manual describes the standard of positioning module, installation method, the method to use each positioning function, programming and the wiring with external equipment.

1.1 Characteristics

The characteristics of positioning module are as follows.

(1) The positioning module is available for XGT Series.

(2) Various positioning control function
It has various functions needed for positioning system such as positioning control, speed control etc.
(a) The operation data including positioning address and operation method, operation pattern is available to set up to 400 for each axis.
With this operation data, positioning for each axis is carried out
(b) Various sing-axis operations are available.
1) Position Control
2) Speed Control
3) Feed Control
4) Multi-axis Synchronous Start
5) Point Operation
(c) Various Multi-axis Operations are available.
1) Circular arc Interpolation (up to 2 groups, 2 axes per one group)
2) Linear Interpolation (up to 4 axes)
3) Helical Interpolation
4) Ellipse Interpolation
(d) Switching Control in operation is available.
1) Position/Speed Control Switching
2) Speed/Position Control Switching.
(e) Cam Control is available.
It is available to create up to 8 kinds of cam data with various cam profile of XG-PM.
(f) Various Homing Control Function.
1) 7 methods are available for Homing
a) Origin detection after DOG Off
b) Origin detection after deceleration in case of DOG On
c) Origin detection by the HOME and upper/lower limit
d) Origin detection by DOG
e) High speed Origin detection
f) Origin detection by upper-lower limit
g) Origin detection by HOME
2) Available to set the origin of machine without homing by setting the floating origin
(g) For the Acceleration/Deceleration method, it is available to select trapezoid or S-type.

(3) High speed start process
Due to the realization of high speed start process, the start time reduced to 1 ㎳. In addition, there is no delay time between axes in synchronous start and interpolation start.

(4) Easy maintenance
Various data such as operation data, operation parameter are saved on FRAM in APM module. Therefore, data will be saved without delay time and there is no limit in writing count.

(5) The number of positioning module can be used in one base is not limited
(But, they have to be used within the capacity of power module.)

(6) Self-diagnosis, monitoring and test are available with strong software package, XG-PM.
(a) Monitoring (Module & External Input/output Signal) Function
(b) Trace Function
(c) Trend Function
(d) Reading and Saving Module Parameter/Operation Data
(e) Creation of Cam Data
(f) Simulation Function
(g) Providing details about errors and the solution for it
(h) Print Function of various forms
(i) Editing operation data in Excel program is available

(7) Applicable XGT CPU version for XPM module

XGT CPU Module Type	Version
XGK CPU Module	V3.0 or Upper
XGI CPU Module	V3.0 or Upper
XGR CPU Module	V1.6 or Upper

1.2 Purpose of Positioning Control

The purpose of positioning module is to transfer the moving objects (tools etc.) with setting speed from the current position and stop them on the setting position correctly. And high precision positioning is available by positioning pulse string signal as it is connected to various control driving devices such as servo driving devices or stepping motor.
In application, it can be used widely with engineering machine, semiconductor assembly machine, grinder, small machine center, lifter etc.

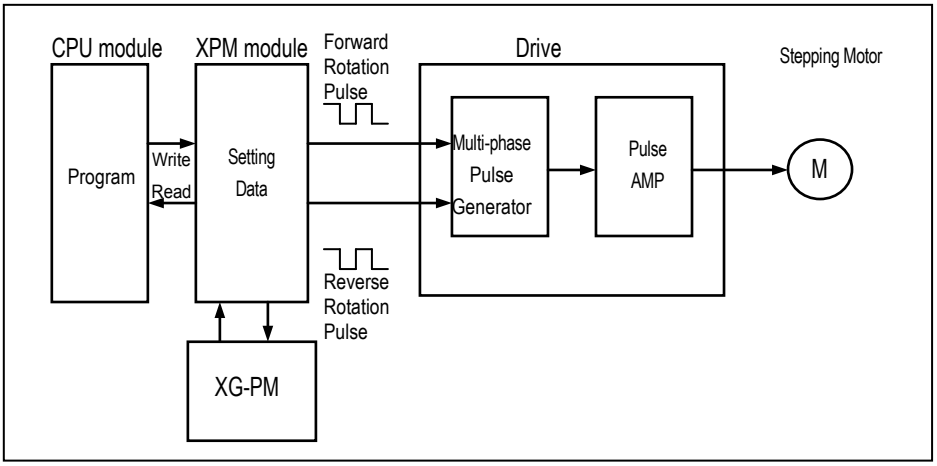

Fig. 1.1 Overview of Position Control for Stepping Motor

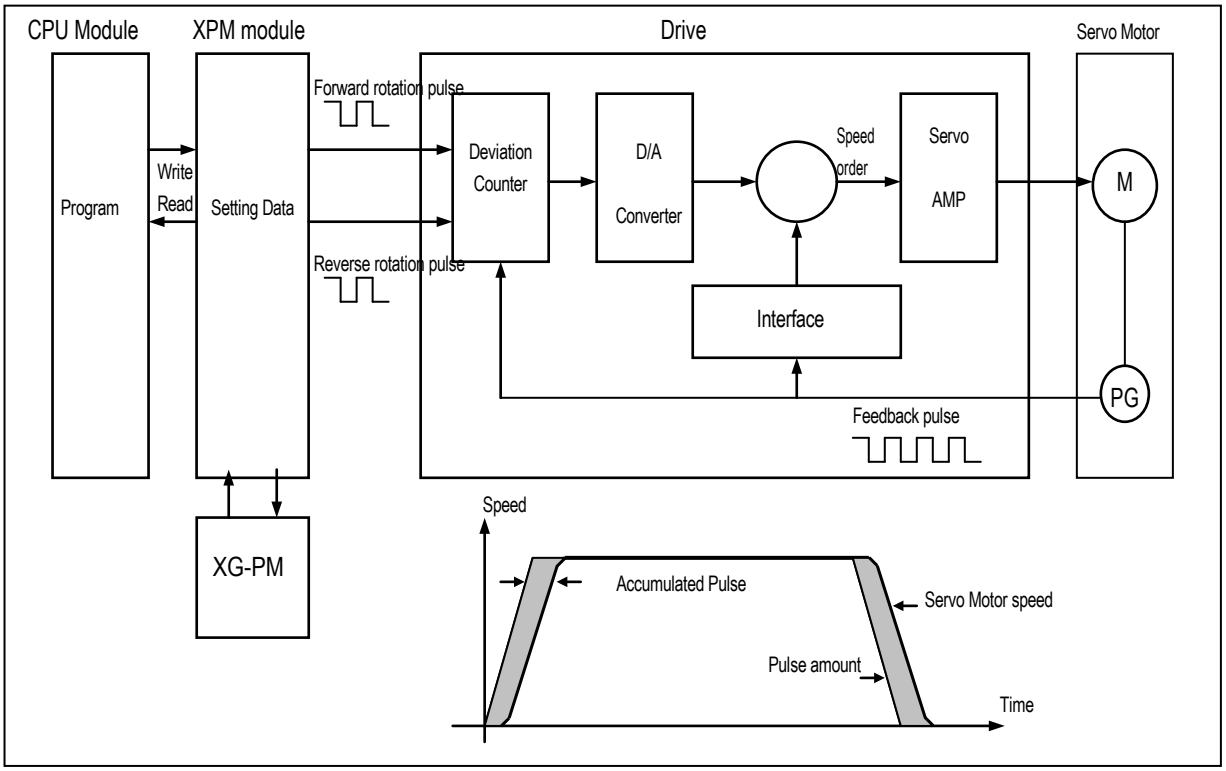

Fig. 1.2 Overview of Position Control for Servo Motor

1.3 Signal Flow of Positioning Module

The flow of PLC system using the positioning module is as follows.

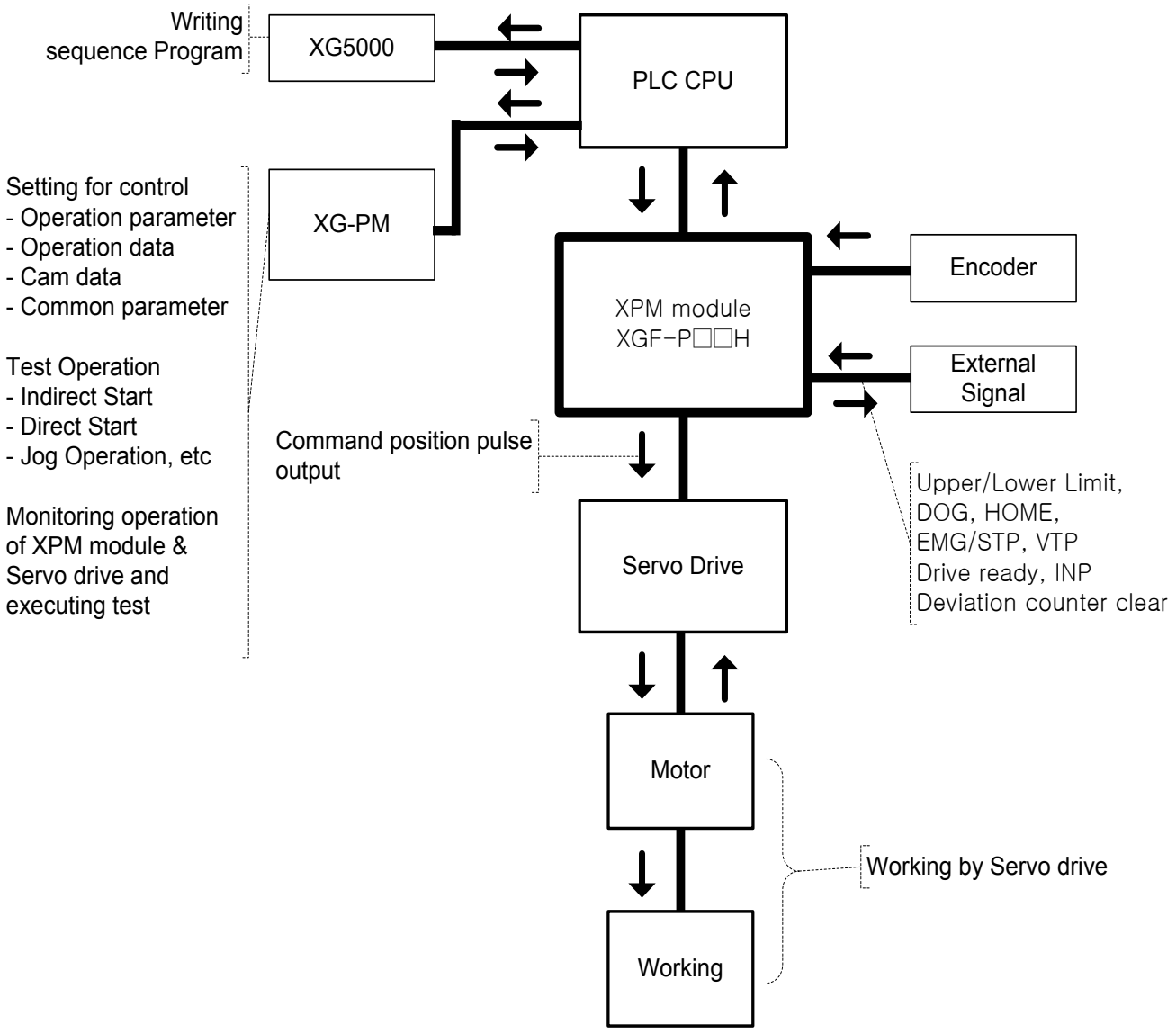

1.4 Function overview of APM module

Describe Representative functions of APM module (Coordinate & Linear Interpolation, Circular Interpolation & Stop) briefly.

1.4.1 Position Control

Execute positioning control for the designated axis from starting position(current position) to goal position(the position to move to).

(1) Control by Absolute coordinates

(a) Execute positioning control from starting position to goal position designated in positioning data
(b) Positioning control is executed based on origin designated in homing
(c) Moving direction is decided by starting position and goal position.
■Starting Position < Goal Position : Forward Positioning Operation
■Starting Position > Goal Position : Reverse Positioning Operation

[Example]
■Starting Position : 1000
■Goal Position : 8000
Value of Forward movement is 7000 (7000=8000-1000)

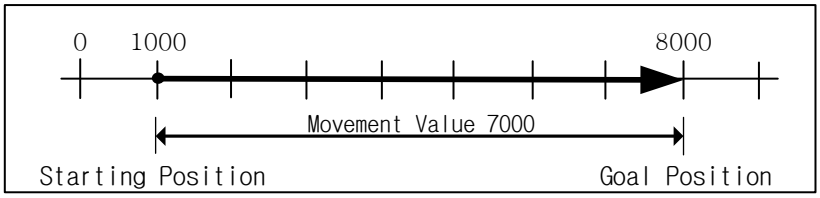

(2) Control by Incremental Coordinates

(a) Execute positioning control from starting position as much as goal movement value.
The difference from absolute coordinates control is that the goal position is movement value, not position value.
(b) Moving direction depends on sign of movement value.
■Positive value (+ or 0) : Positioning operation with forward direction
■Negative value (-) : Positioning operation with reverse direction

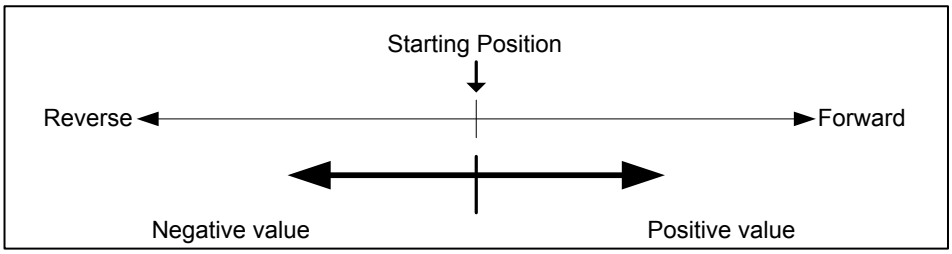

[Example]

■ Starting Position : 5000

■ Goal Position : -7000

In this condition, it moves reversely and stops at -2000.

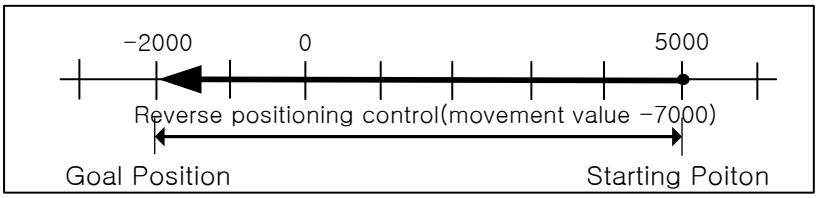

1.4.2 Interpolation Control

(1) Linear Interpolation Control

Execute Linear interpolation control with designated axis at start position (Current position).
Combination of interpolation axis is unlimited and it is available to execute max. 4 axis Linear interpolation control.

(a) Linear interpolation by absolute coordinates

1) Execute Linear interpolation from starting position to goal position designated by positioning data.
2) Positioning control is executed based on origin designated in homing.
3) Movement direction is designated by starting position & goal position of each axis.

■ Starting position < Goal position : Positioning operation with forward direction

■ Starting position > Goal position : Positioning operation with reverse direction

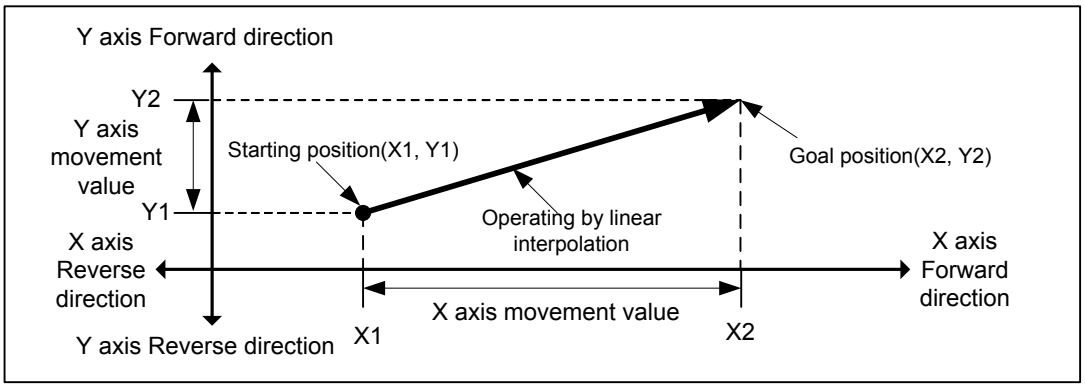

[Example]

■ Starting Position (1000, 4000)

■ Goal Position (10000, 1000)

In this condition, operation is as follows.

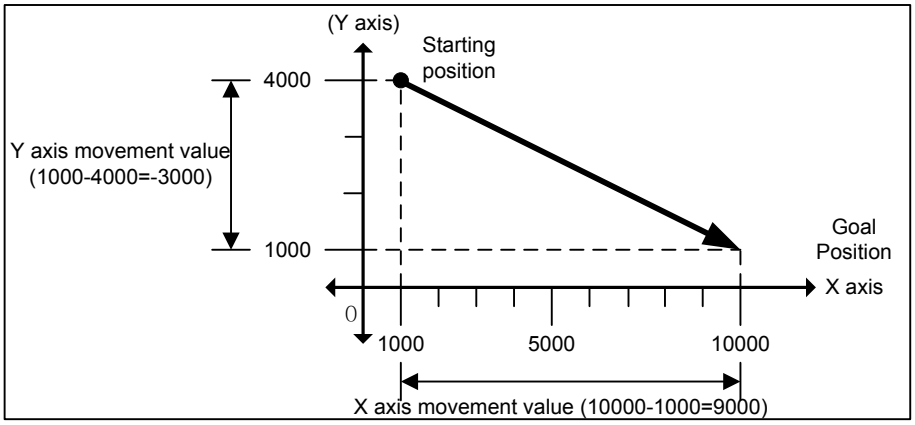

(b) Linear Interpolation by incremental coordinates

1) Goal value becomes movement value
2) Moving direction depends on movement value is positive or negative.
   ■Positive value (+ or 0) : Positioning operation with forward direction
   ■Negative value (-) : Positioning operation with reverse direction

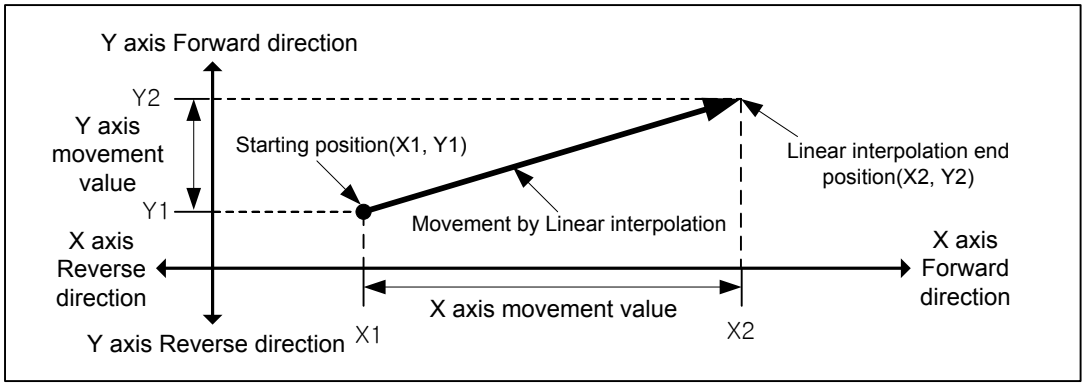

[Example]

■ Starting position (1000, 4000)
■ Goal position (9000, -3000)
   In this condition, operation is as follows.

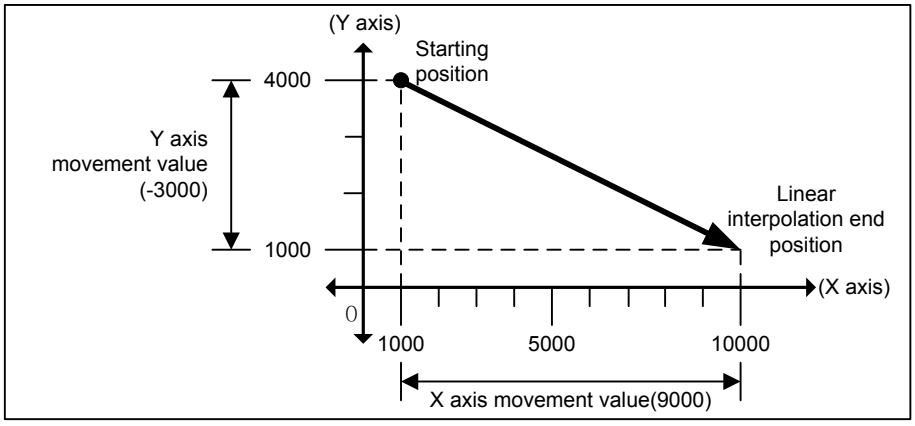

(2) Circular Interpolation Control

Execute interpolation operation along the trace of circle with 2 axes in forward direction that already designated for each axis.

Circular interpolation has 3 types according to auxiliary point, Middle point method passing auxiliary point, Center point method using auxiliary point as center of circle and Radius method using auxiliary point as radius of circle.

In addition, it is available to be executed more than 360° circular interpolation according to the value of "circular interpolation turns'.

The combination of 2 axes that used in circular interpolation is unlimited. (Available to use any 2 of axis1~4)

(a) Circular interpolation with middle point designation form.

1) Starts operating at starting position and execute circular interpolation through the designated middle point.
2) There will be a circular arc whose center point is crossing point of perpendicular bisection between starting position and middle point or middle point and goal position.

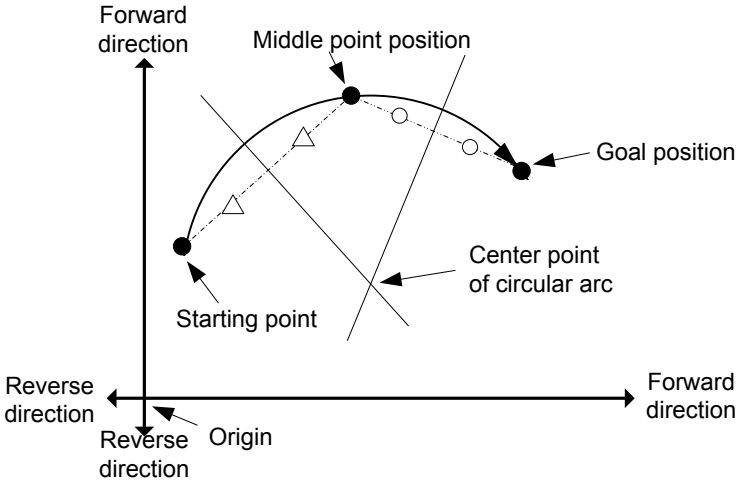

3) Control unit "degree" is not available to be used for circular interpolation control.
4) Movement direction is automatically designated by goal position and auxiliary point of circular interpolation.

(b) Circular interpolation with center point designation form

1) Starts operating from starting position and execute circular interpolation along trace of circle that has distance from starting point to designated center point as radius.

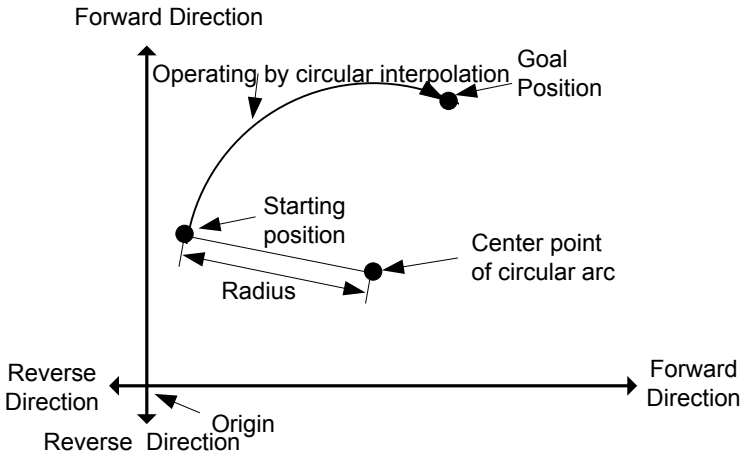

2) If the goal position is same as starting position, it is available to have an operation like a circle that has distance from starting point to auxiliary point as its radius.

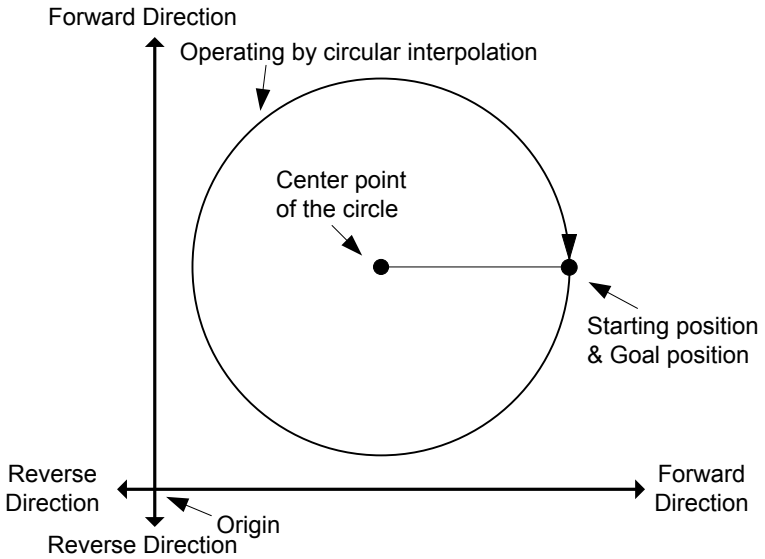

3) Control unit “degree” is not available to be used for circular interpolation control.

4) Direction is determined in setting of “Cir int. mode” (Center point CW, Center point CCW).

(c) Circular interpolation with radius designation form

1) Starts operating from starting position and execute circular interpolation along trace of circular arc that has value designated in auxiliary point of main axis as it radius. Depending on size setting of circular arc(<180°,>=180°), center point of circular arc will be different.

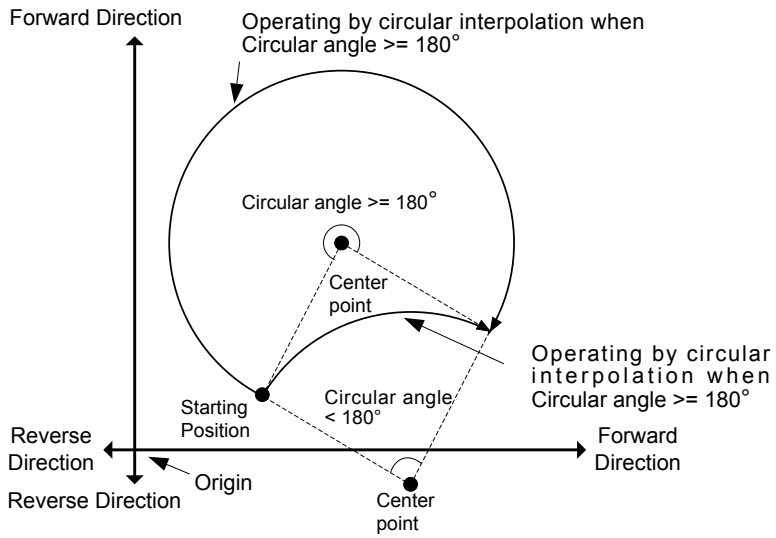

2) In radius designation form, goal position can not be set the same as starting position.
3) Control unit “degree” is not available to be used for circular interpolation control.
4) The direction and arc size are determined in “Cir. int. mode”.

(3) Helical Interpolation

(1) Moves along the designated trace of circular arc depending on circular arc interpolation setting and executes Linear interpolation synchronously.
(2) It is available to execute helical interpolation of more than 360°depending on ‘Circular interpolation turns’ setting.
(3) The combination of axis that used for helical interpolation control is unlimited, 3 axes among axis1 ~ 4 are used.

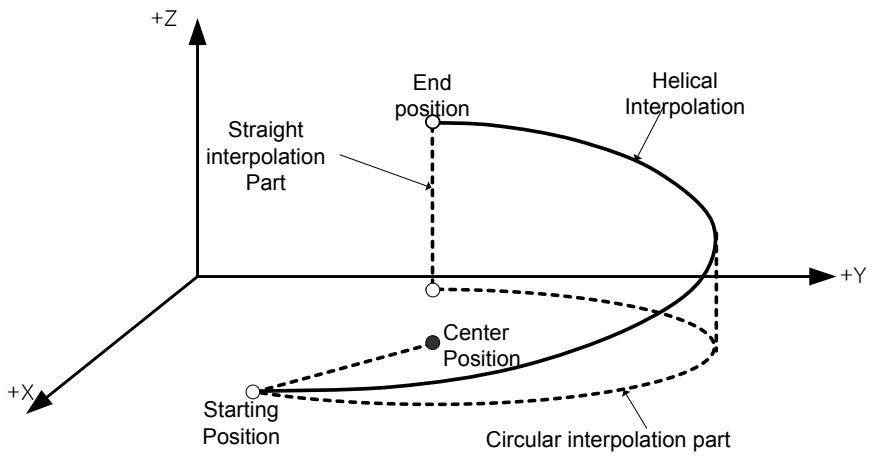

1.4.3 Speed Control

(1) It is executed by positioning operation start command (Direct start, Indirect start, Synchronous start) and keeps operating with designated speed until Dec. stop command.
(2) Speed control has forward operation and reverse operation.
(a) Forward operation : Position value >= 0
(b) Reverse operation : Position value < 0
(3) In case of speed control, M code will be on only when M code mode is “With”.
(4) Operating Timing

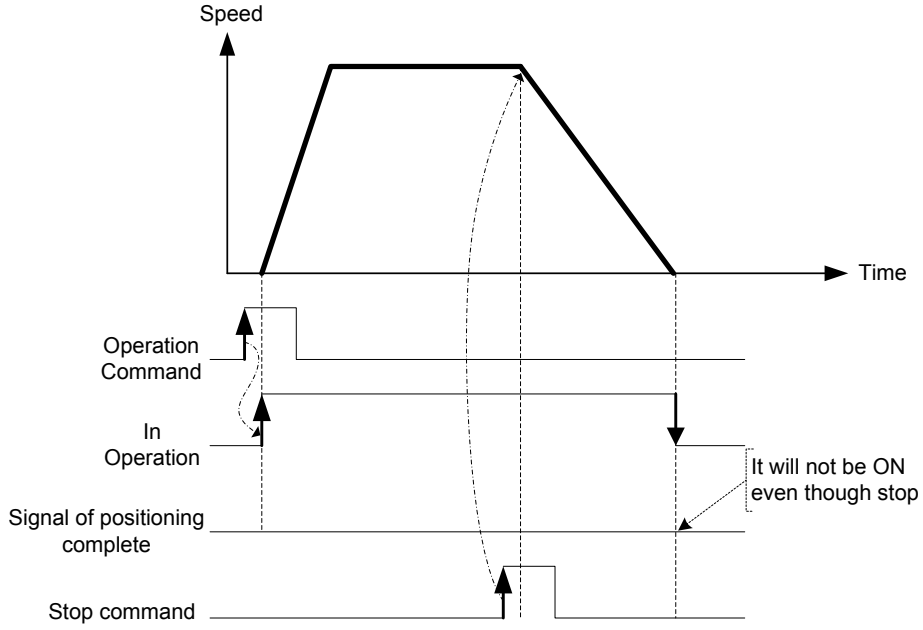

1.4.4 FEED Control

(1) After executed by positioning start, reset the current position as 0 and start positioning as much as movement value already set.
(2) Movement direction is decided by movement value.
(3) Feed control has forward direction operation and reverse direction operation.
(a) Forward direction : Position value >= 0
(b) Reverse direction : Position value <0

(4) Operation timing is as follows.

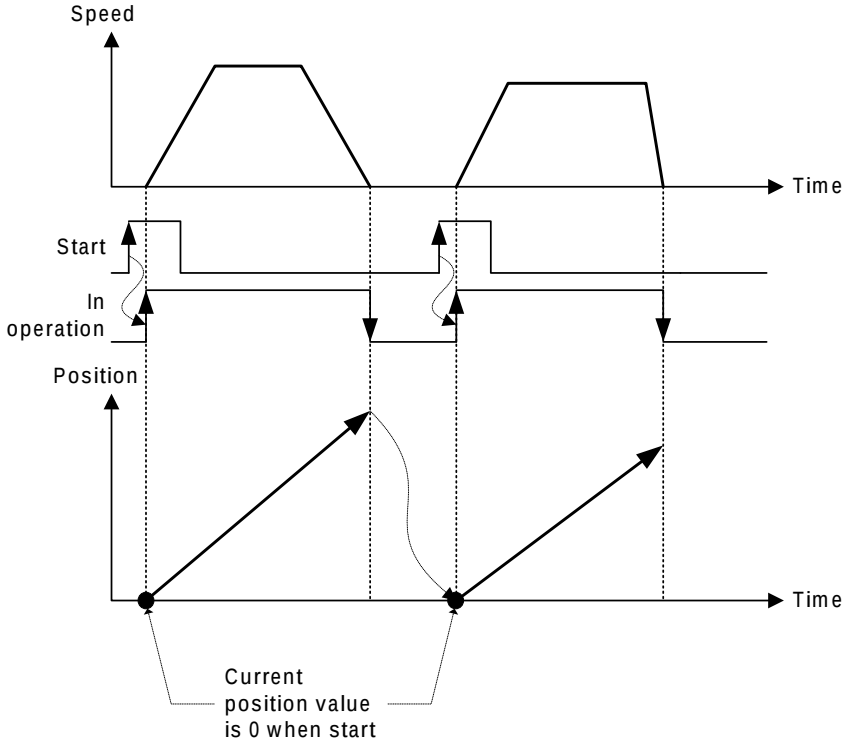

Chapter 2 Specifications

2.1 General Specifications

The following table shows the general specification of XGT series.

No.	Item	Specifications				Related specifications
1	Ambient temperature	0℃ ~ +55℃				-
2	Storage temperature	-25℃ ~ +70℃				-
3	Ambient humidity	5 ~ 95%RH (Non-condensing)				-
4	Storage humidity	5 ~ 95%RH (Non-condensing)				-
5	Vibration resistance	Occasional vibration			-	-
		Frequency	Acceleration	Amplitude	How many times	IEC61131-2
		10 ≤ f < 57 ㎐	-	0.075 ㎜	10 times each directions (X, Y and Z)	
		57 ≤ f ≤ 150 ㎐	9.8 ㎧ (1G)	-		
		For continuous vibration				
		Frequency	Acceleration	Amplitude		
		10 ≤ f < 57 ㎐	-	0.035 ㎜		
		57 ≤ f ≤ 150 ㎐	4.9 ㎧ (0.5G)	-		
6	Shock resistance	• Peak acceleration: 147 m/s^2(15G) • Duration: 11ms • Half-sine, 3 times each direction per each axis				IEC61131-2
7	Noise resistance	Square wave Impulse noise	AC: ± 1,500V DC: ±900V			LSIS standard
		Electrostatic discharge	Voltage : 4kV (contact discharging)			IEC 61131-2, IEC 61000-4-2
		Radiated electromagnetic field noise	80 ~ 1,000 MHz, 10V/m			IEC 61131-2, IEC 61000-4-3
		Fast transient/bust noise	Segment	Power supply module	Digital/analog input/output communication interface	IEC 61131-2, IEC 61000-4-4
			Voltage	2kV	1kV	
8	Environment	Free from corrosive gasses and excessive dust				-
9	Altitude	Up to 2,000 ms				-
10	Pollution degree	Less than equal to 2				-
11	Cooling	Air-cooling				-

N0ote

(1) IEC (International Electrotechnical Commission):
An international nongovernmental organization which promotes internationally cooperated standardization in electric/electronic field, publishes international standards and manages applicable estimation system related with.

(2) Pollution degree:
An index indicating pollution degree of the operating environment which decides insulation performance of the devices. For instance, Pollution degree 2 indicates the state generally that only non-conductive pollution occurs. However, this state contains temporary conduction due to dew produced.

2.2 Performance Specifications

The following table shows the performance specifications of XGT Positioning Module.

2.2.1 Function Specifications

Items \ Model		XGF-PO1H XGF-PD1H	XGF-PO2H XGF-PD2H	XGF-PO3H XGF-PD3H	XGF-PO4H XGF-PD4H
No. of control axis		1	2	3	4
Interpolation function		None	▪2 axis linear interpolation ▪2 axis circular interpolation	▪2/3 axis linear interpolation ▪2 axis circular interpolation ▪3 axis helical interpolation	▪2/3/4 axis linear interpolation ▪axis2 circular interpolation ▪3 axis helical interpolation
Control method		Position control, Speed control, Speed/Position control, Position/Speed control, Feed control			
Control unit		Pulse, ㎜, inch, degree			
Positioning data		Each axis can have up to 400 operation data .(Operation step number : 1 ~ 400) Available to set with software package or program			
Software package	Connection	RS-232C port of CPU module or USB			
	Setting data	Common, Basic, Extended, Manual operation, Homing, Input/output signal parameter, Operation data, Cam data, Command information			
	Monitor	Operation information, Trace, Input terminal information, Error information			
Back-up		Save the parameter, operation data in Flash ROM (No need of Battery)			
POSITIONING	Positioning method	Absolute method/Incremental method			
	Position address range				
	Speed range				
	Acc./Dec. process	Trapezoid type, S-type			
	Acc./Dec. time	0 ~ 2,147,483,647 ㎳ selection is available from 4 types of acceleration/deceleration pattern			
Manual Operation		Jog Operation, MPG Operation, Inching Operation			
Homing method		DOG + HOME (Off), DOG + HOME(On), upper limit + HOME, DOG, High speed, Upper/Lower limit, HOME			
Speed change function		Speed change (Percent/Absolute value)			

Position address range:

	Absolute	Incremental	Speed/Position, Position/Speed Switching control
㎜	-214748364.8~ 214748364.7(㎛)	-214748364.8~ 214748364.7(㎛)	-214748364.8~ 214748364.7(㎛)
Inch	-21474.83648 ~ 21474.83647	-21474.83648 ~ 21474.83647	-21474.83648 ~ 21474.83647
degree	-21474.83648 ~ 21474.83647	-21474.83648 ~ 21474.83647	-21474.83648 ~ 21474.83647
pulse	-2147483648 ~ 2147483647	-2147483648 ~ 2147483647	-2147483648 ~ 2147483647

Speed range:

㎜	0.01 ~ 20000000.00(㎜/min)
Inch	0.001 ~ 2000000.000(Inch/min)
degree	0.001 ~ 2000000.000(degree/min)
pulse	1 ~ 4,000,000(pulse/sec): Line driver 1 ~ 500,000(pulse/sec): Open collector
rpm	0.1 ~ 100000.0(RPM)

Items \ Models		XGF-PO1H XGF-PD1H	XGF-PO2H XGF-PD2H	XGF-PO3H XGF-PD3H	XGF-PO4H XGF-PD4H
External Encoder input	Channel	Channel 1			
	Max. Input	500 kpps			
	Input form	Line drive input (RS-422A IEC specification)			
	Input type	CW/CCW, PULSE/DIR, Phase A/B			
Control Period		1ms			
Max. output speed		XGF-PO1H, XGF-PO2H, XGF-PO3H, XGF-PO4H : 500 kpps XGF-PD1H, XGF-PD2H, XGF-PD3H, XGF-PD4H : 4 Mpps (PHASE : 1Mpps)			
Max. connection distance		XGF-PO1H, XGF-PO2H, XGF-PO3H, XGF-PO4H : 5 m XGF-PD1H, XGF-PD2H, XGF-PD3H, XGF-PD4H : 10 m			
Error indication		Indicated by LED			
Connection connector		40 Pin connector		80 Pin connector	
Size of use cable		AWG #24			
I/O share point		Variable: 16 points, Fixed: 64 points			
Consumable current		XGF-PO1H : 400mA XGF-PD1H : 520mA	XGF-PO2H : 410mA XGF-PD2H : 600mA	XGF-PO3H : 420mA XGF-PD3H : 850mA	XGF-PO3H : 430mA XGF-PD3H : 890mA
Weight		113g	114g	126g	128g

2.3 External Interface I/O Specifications

Here describes the I/O interface for external equipment.

2.3.1 Input Specifications

Signal name	Rated input voltage/ current	Use voltage range	On voltage/ current	Off voltage/current	Input resistance	Response time
DOG	DC 24V/4.7 ㎃	DC 20.4～26.4V	≥DC 16V/3.1 ㎃	≤DC 4V/1.0 ㎃	Approx. 5.1 ㎏Ω	≤0.7 ㎳
External high-limit	DC 24V/4.7 ㎃	DC 20.4～26.4V	≥DC 16V/3.1 ㎃	≤DC 4V/1.0 ㎃	Approx. 5.1 ㎏Ω	≤0.7 ㎳
External low-limit	DC 24V/4.7 ㎃	DC 20.4～26.4V	≥DC 16V/3.1 ㎃	≤DC 4V/1.0 ㎃	Approx. 5.1 ㎏Ω	≤0.7 ㎳
EMG stop/DEC stop	DC 24V/4.7 ㎃	DC 20.4～26.4V	≥DC 16V/3.1 ㎃	≤DC 4V/1.0 ㎃	Approx. 5.1 ㎏Ω	≤0.7 ㎳
Speed/position switching signal	DC 24V/4.7 ㎃	DC 20.4～26.4V	≥DC 16V/3.1 ㎃	≤DC 4V/1.0 ㎃	Approx. 5.1 ㎏Ω	≤0.7 ㎳
Drive Ready	DC 24V/4.7 ㎃	DC 20.4～26.4V	≥DC 16V/3.1 ㎃	≤DC 4V/1.0 ㎃	Approx. 5.1 ㎏Ω	≤0.7 ㎳
In-position	DC 24V/4.7 ㎃	DC 20.4～26.4V	≥DC 16V/3.1 ㎃	≤DC 4V/1.0 ㎃	Approx. 5.1 ㎏Ω	≤0.7 ㎳
Home	DC 5V/8 ㎃	DC 4.25～5.5 V	≥DC 3V/3.5 ㎃	≤DC 1V/0.7 ㎃	Approx. 670Ω	≤0.2 ㎳
	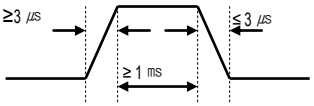					
Manual pulse generator / Encoder input	DC 5V/10㎃	DC 4.25～5.5 V	≥DC 3V/5.0㎃	≤DC 1V/1.0㎃	Approx. 470Ω	≤0.5 ㎲
	Encoder input : based on RS-422A Line Driver Level (Am26LS31)					
	1) Pulse width 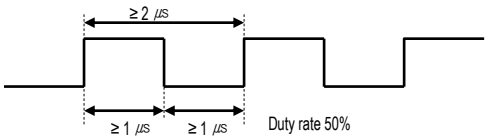 2) Phase difference 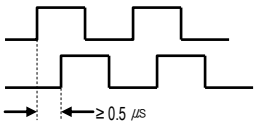 If A phase input pulse precedes B phase input pulse, the position address value increases. If B phase input pulse precedes A phase input pulse, the position address value decreases.					

2.3.2 Output Specifications

Signal	Rated load voltage	Use load voltage range	Max. load current / Dash current	Max. voltage falling (On)	Leakage current (Off)	Response Time
Pulse Input	DC 5~24V	DC 4.75~26.4V	50㎃(1 point) / ≤200㎃ 10㎳	≤DC 0.5V	≤0.1㎃	-

▷Differential Line Driver (in case of Line Driver) based on Am26C31
▷CW/ CCW type, PLS/DIR type, PHASE type can be selected from pulse output mode of basic parameter for program and APM S/W Package.
▷Pulse output mode (settable in basic parameter of XG-PM or program)
Pulse output level (settable in from common parameter of XG-PM or program) is as follows.

Pulse output mode		Selection of output signal level			
		High Active		Low Active	
		Forward	Reverse	Forward	Reverse
CW / CCW	CW	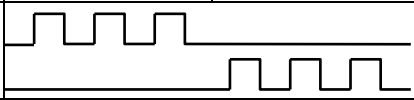		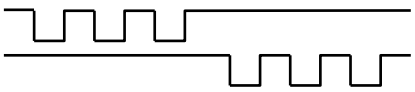	
	CCW				
PLS / DIR	PULSE	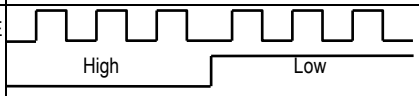		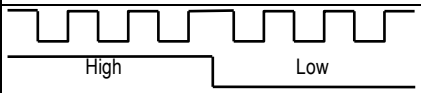	
	DIR	High	Low	High	Low
Phase	A	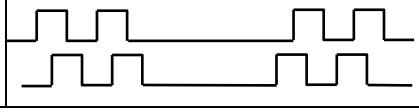		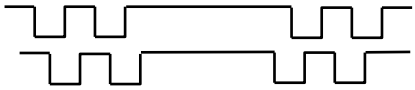	
	B				

Signal	Rated load voltage	Use load voltage range	Max. load current / Dash current	Max. voltage falling (On)	Leakage current (Off)	Response Time
Deviation Counter Clear	DC 5~24V	DC 4.75~26.4V	0.1A(1point) /0.4A ≤10 ㎳	≤ DC 1V ≤DC 2.5V (max)	≤0.1 ㎃	≤0.1ms

2.3.3 External Equipment and Interface Specifications

(1) Pin Array of Connector

Pin Array	Pin no. AX1	Pin no. AX2	Pin no. AX3	Pin no. AX4	Signal Name		Signal direction positioning-external	Action condition
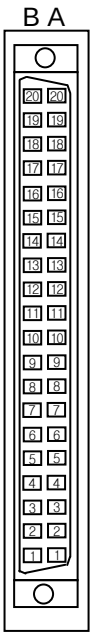 Axis1/2	20A				MFG A+	Manual pulse generator/Encoder A+ input	←	
	20B				MFG A-	Manual pulse generator/Encoder A- input	←	
	19A				MFG B+	Manual pulse generator/Encoder B+ input	←	
	19B				MFG B-	Manual pulse generator/Encoder B- input	←	
	20C, 19C, 20D, 19D				NC	Not use		
	18A	18B	18C	18D	FP+	Pulse output (Differential Motion +)	→	
	17A	17B	17C	17D	FP-	Pulse output (Differential Motion -)	→	
	16A	16B	16C	16D	RP+	Pulse sign (Differential Motion +)	→	
	15A	15B	15C	15D	RP-	Pulse sign (Differential Motion -)	→	
	14A	14B	14C	14D	OV+	Upper Limit	←	
	13A	13B	13C	13D	OV-	Lower Limit	←	
	12A	12B	12C	12D	DOG	DOG	←	
	11A	11B	11C	11D	EMG	Emergency Stop	←	
					STOP	Dec. Stop Signal		
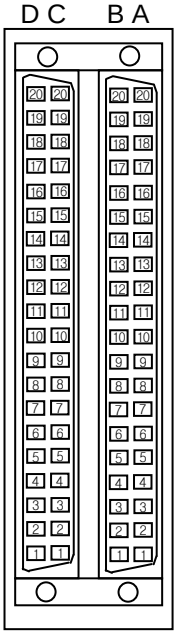 Axis1/2/3/4	10A	10B	10C	10D	VTP	Speed/Position Control Switching Signal	←	
	9A	9B	9C	9D	COM	Common (OV+, OV-, DOG, EMG/STOP, VTP)	⇔	
	8A	8B	8C	8D	DR	Drive ready Signal	←	
	7A	7B	7C	7D	INP	In-Position Signal	←	
	6A	6B	6C	6D	DR/INP COM	DR/INP Signal Common	⇔	
	5A	5B	5C	5D	CLR	Deviation counter clear signal	→	
	4A	4B	4C	4D	CLR COM	Deviation counter clear signal common	⇔	
	3A	3B	3C	3D	HOME +5V	Home Signal (+5V)	←	
	2A	2B	2C	2D	HOME COM	Home Signal (+5V) Common	⇔	
	1A, 1C				+24V	External 24V Power	←	
	1B, 1D				+24V COM	External 24V GND	⇔	

Note

(1) Open collector should be structured so that the external 24V power(24V: 20A,20C 0V: 20B,20D) is connected to an axis to operate. No pulse is outputted unless the external 24V is supplied.

(2) Internal circuit of connector

(a) Pulse output

Internal circuit	Pin No. Ax 1	Ax 2	Ax 3	Ax 4	Signal	
Open collector output 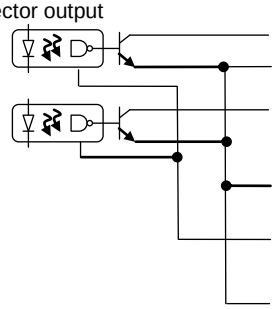	18A	18B	18C	18D	FP+	Forward Pulse(CW/PLS/Phase A)
	17A	17B	17C	17D	FP-	Pulse COM(CW/PLS/Phase A)
	16A	16B	16C	16D	RP+	Reverse Pulse(CCW/DIR/Phase B)
	15A	15B	15C	15D	RP-	Pulse COM(CCW/DIR/Phase B)
	1A, 1C				+24V	External 24V power
	1B, 1D				+24V COM	External 24V GND
Line Driver output 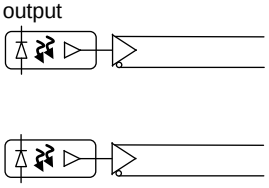	18A	18B	18C	18D	FP+	Forward Pulse+(CW/PLS/Phase A)
	17A	17B	17C	17D	FP-	Forward Pulse-(CW/PLS/Phase A)
	16A	16B	16C	16D	RP+	Reverse Pulse+(CW/DIR/Phase B)
	15A	15B	15C	15D	RP-	Reverse Pulse-(CW/DIR/Phase B)

(b) Input signal

Classification	Pin No. Ax 1	Ax 2	Ax 3	Ax 4	Internal circuit	Signal	
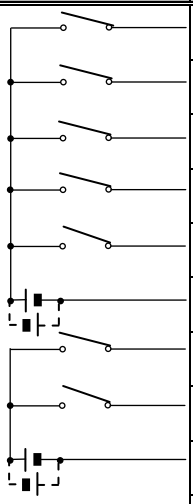	14A	14B	14C	14D	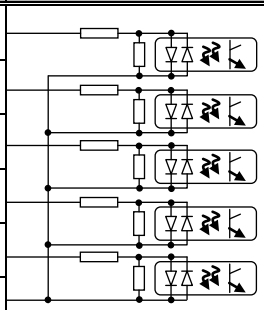	OV+	Upper limit signal(B contact point)
	13A	13B	13C	13D		OV-	Lower limit signal(B contact point)
	12A	12B	12C	12D		DOG	DOG
	11A	11B	11C	11D		EMG/STOP	Emergency Stop Signal/ External Stop Signal
	10A	10B	10C	10D		VTP	Speed/Position switching signal
	9A	9B	9C	9D		COM	Common (0V+,0V-,DOG,EMG,STOP,VTP)
	8A	8B	8C	8D	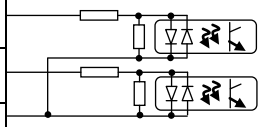	DR	Drive ready signal
	7A	7B	7C	7D		INP	In-Position Signal
	6A	6B	6C	6D		DR/INP COM	DR/INP Signal Common
*1 Wiring path without signal	5A	5B	5C	5D			
	4A	4B	4C	4D			
	3A	3B	3C	3D	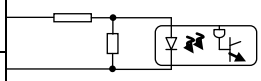	HOME +5V	Home signal (+5V)
	2A	2B	2C	2D		HOME COM	HOME (+5V) Common

*1: Available to use NPN or PNP type device.

(c) External Output Signal

Classification	Pin No.				Internal Circuit	Signal	
	Ax1	Ax2	Ax3	Ax4			
	5A	5B	5C	5D	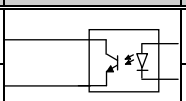	CLR	Deviation counter Clear Signal
	4A	4B	4C	4D		CLR COM	Deviation counter Clear Common.

(d) Manual pulse generator input/encoder input

Classification	Pin No.	Internal circuit	Signal	
Open collector type voltage 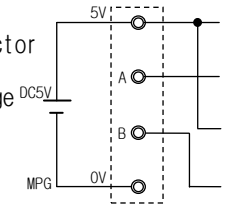	20A	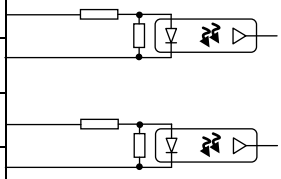	MPG A+	Manual pulse generator A+ input
	20B		MPG A-	Manual pulse generator A- input
	19A		MPG B+	Manual pulse generator B+ input
	19B		MPG B-	Manual pulse generator B- input
Line driver type 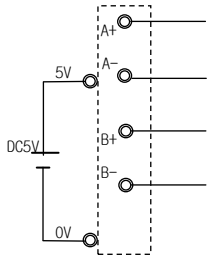	20A	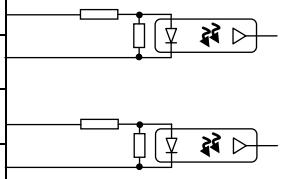	MPG A+	Encoder A+ input
	20B		MPG A-	Encoder A- input
	19A		MPG B+	Encoder B+ input
	19B		MPG B-	Encoder B- input

2.4 The Name of Each Part

2.4.1 The name of each part

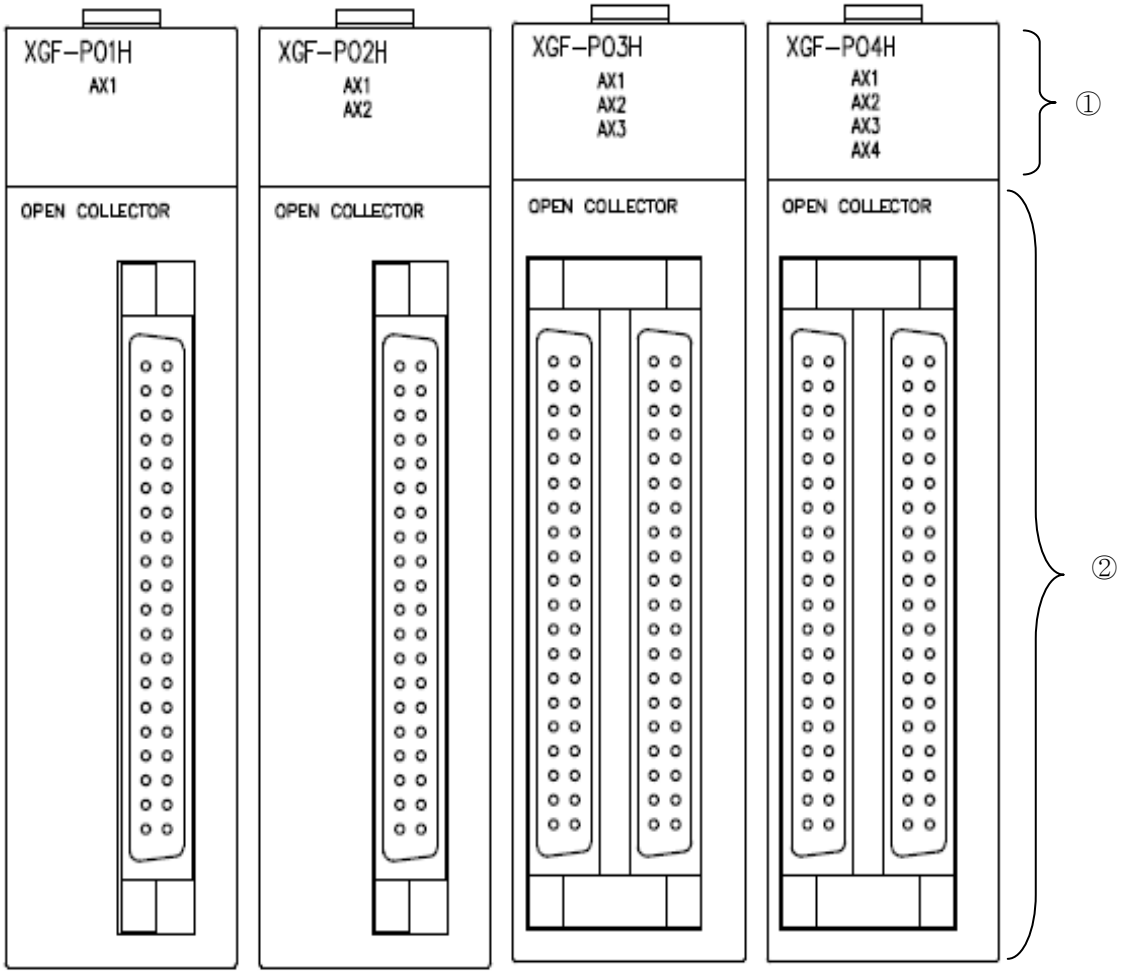

No.	Name	Description
①	LED Indication for Operating axis (Axis1 ~ Axis4)	1. Operating indication ▶Light-On: during operation of the corresponding axis ▶Light-Off: when the corresponding axis stops 2. Error indication ▶Light-On: during normal operation ▶Blink: error of the corresponding axis (LED of axis having error would be blinking)
②	External wiring connector	Connector for drive machinery, input, encoder

2.5 Connection to XGT Servo System

2.5.1 Connection of Open Collector

The following shows the basic wiring diagram of XGF-PO1H and XGT Servo System XDA-S Series. The connection between XGF-PO2H, XGF-PO3H, XGF-PO4H and XGT Servo System XDA-S Series should be wired by referring to “2.3.3 External Equipment and Interface Specification”.

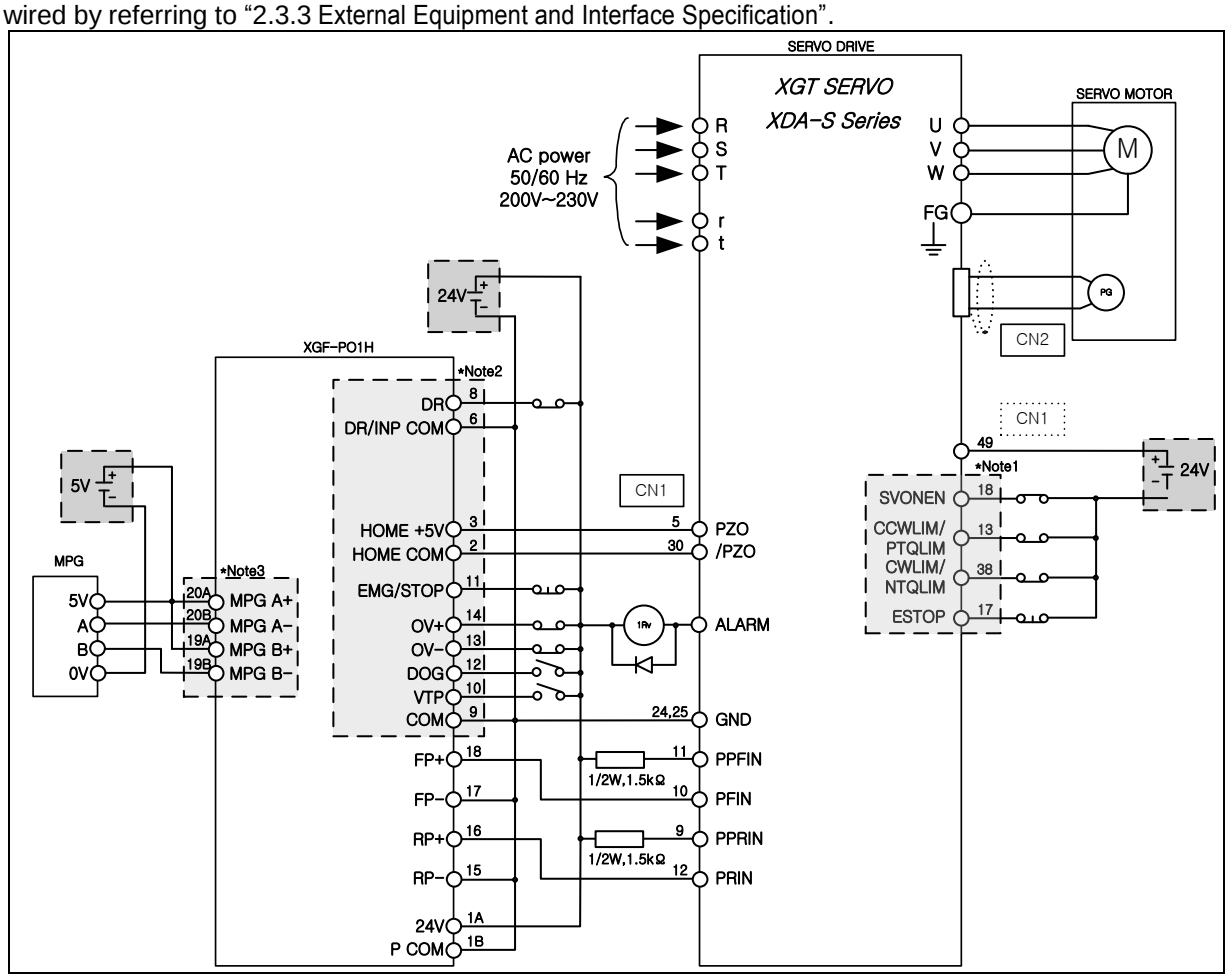

Note

*Note 1
The external input signal of XGT Servo Drive can be changed by setting the parameter of servo drive. The number allocated in the wiring diagram is applied when setting the parameter of servo drive to “Position control setting mode (Ph07-01=27).”
For the details of external input setting of servo drive, refer to “3.8 Input Point Function Setting”
*Note 2
The operation condition of XGF-PO1H may vary on the input signal parameter, refer to the content of “5.4 Input Signal Parameter”.
*Note 3
The manual pulse generator (MPG) illustrates 5V voltage output type(open collector). If 12V/24V type manual pulse generator (MPG) is used, the input voltage should be changed from 5V to 12V/24V. Connect 1 ㎏ for 12V and 2.2 ㎏ for 24V to MPG A+ (Pin 1A), MPG B+ (Pin 2A) then connect power (Pull-up resistor is needed.)

2.5.2 Connection of Line Driver

The following diagram shows the basic wiring of XGF-PD1H and XGT Servo System XDA-S Series. For the connection of XGF-PD2H, XGF-PD3H, XGF-PD4H and XGT Servo System XDA-S Series, please refer to “2.3.3 External Equipment and Interface Specification”

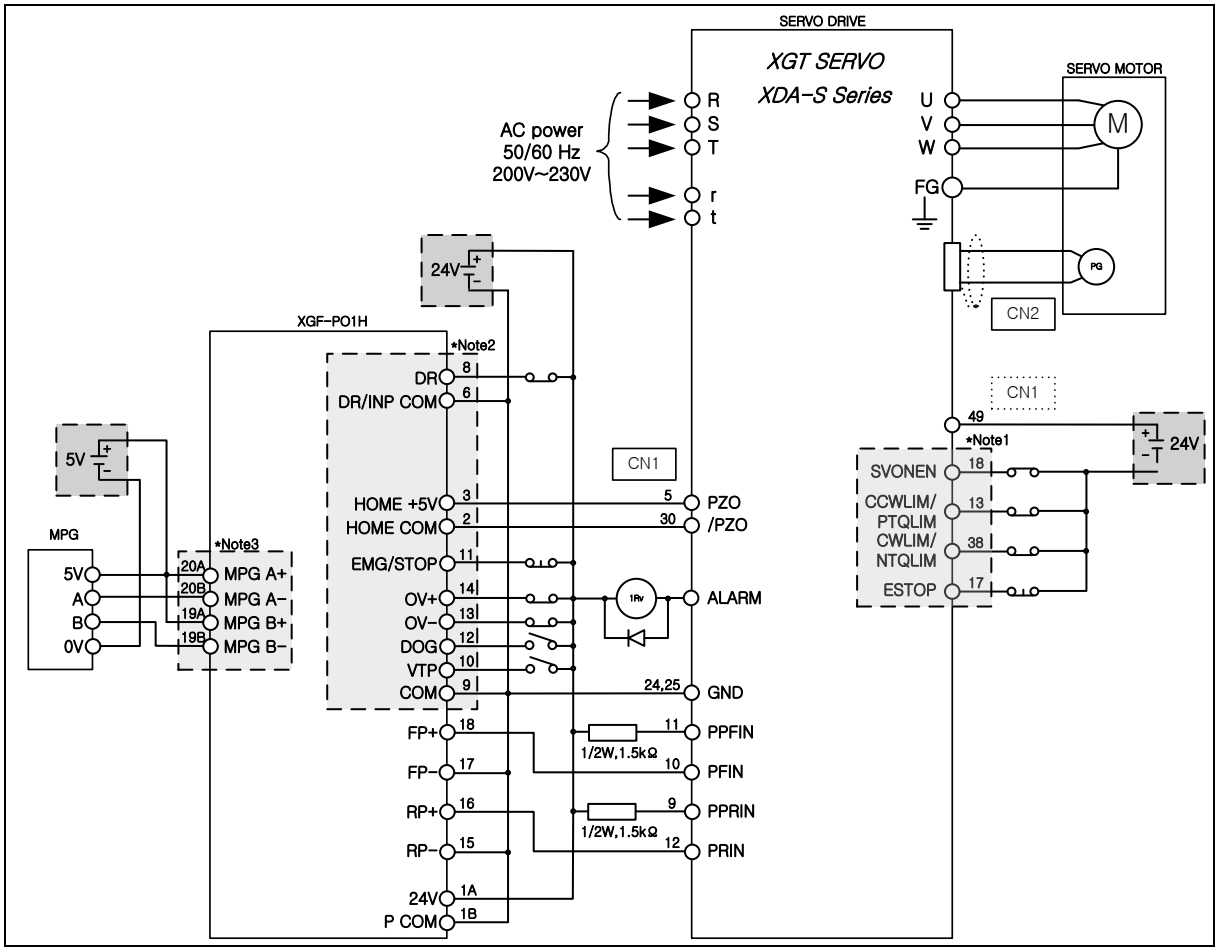

Note

*Note 1
The external input signal of XGT Servo Drive can be changed by setting the parameter of servo drive. The number allocated in the wiring diagram is applied when setting the parameter of servo drive to “Position control setting mode(Ph07-01=27).”
For the details of external input setting of servo drive, refer to “3.8 Input Point Function Setting”
*Note 2
The operation condition of XGF-PD1H may vary on the input signal parameter, refer to the content of “5.4 Input Signal Parameter”.
*Note 3
The manual pulse generator (MPG) illustrates 5V voltage output type(open collector). If 12V/24V type manual pulse generator (MPG) is used, the input voltage should be changed from 5V to 12V/24V. Connect 1 ㎏ for 12V and 2.2 ㎏ for 24V to MPG A+ (Pin 1A), MPG B+ (Pin 2A) then connect power (Pull-up resistor is needed.)

Chapter 3 Operation Order and Installation

3.1 Operation Order

▶ This chapter describes the Operation order in case of positioning operation by positioning module.

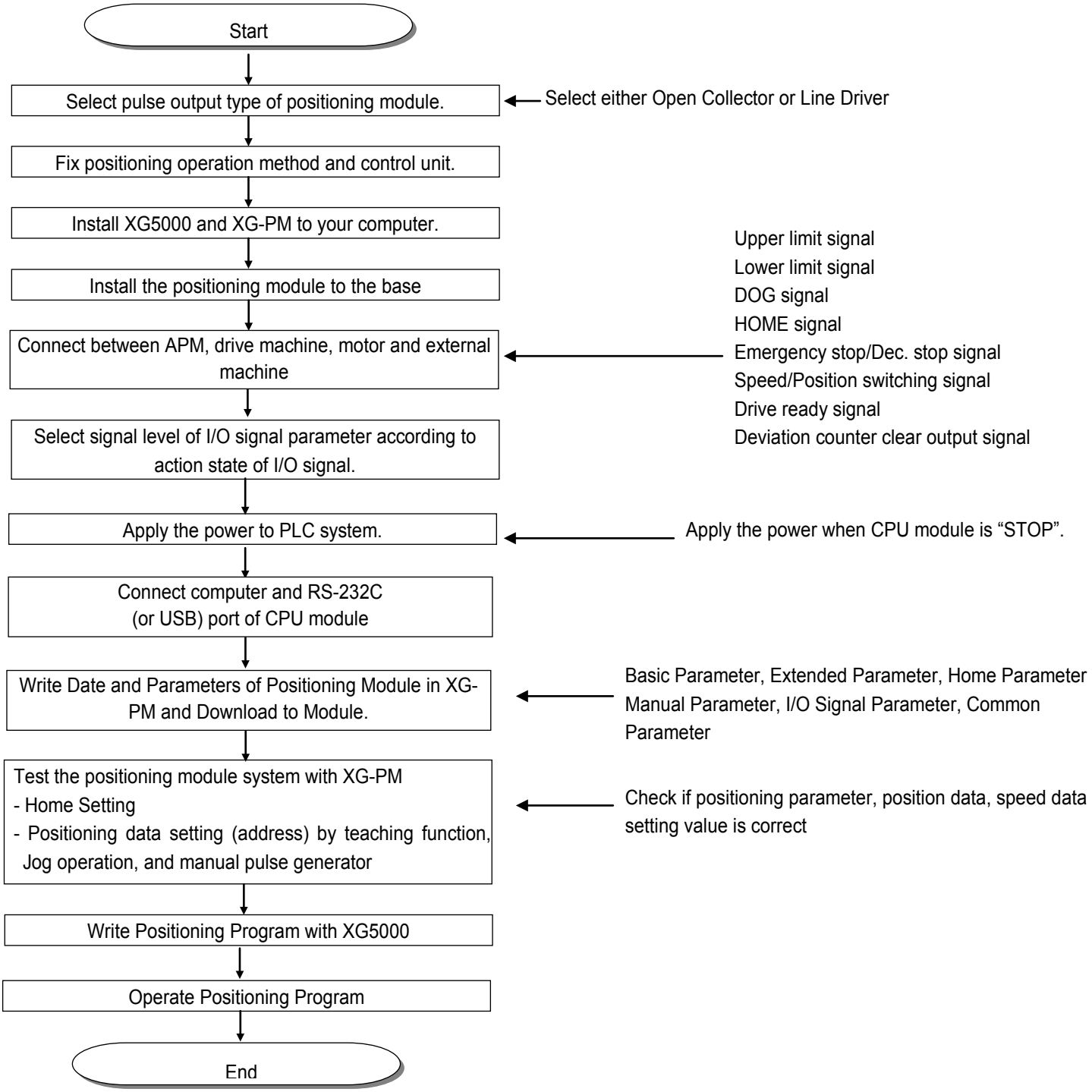

3.2 Installation

3.2.1 Installation Environment

This machine has a good reliability regardless of installation environment but cares should be taken in the following items to guarantee the reliability and safety of the system.

(1) Environment Condition
- Install the control panel available for water-proof, anti-vibration.
- The place free from continuous impact or vibration.
- The place not exposed to direct rays.
- The place with no dew phenomena by rapid temperature change.
- The place where surrounding temperature maintains 0-55℃.

(2) Installation Construction
- In case of processing the screw hole or wiring, cares should be taken not to put the wiring remnants to PLC inside.
- Install on the good place to operate.
- Do not install the high voltage machine on the same Panel.
- The distance from duct or surrounding module shall be more than 50mm.
- Ground to the place where surrounding noise environment is good enough.

3.2.2 Notices in Handling

Here describes the notices in handling the positioning module from opening to installation.
(1) Do not fall down or apply the strong impact.
(2) Do not remove PCB from the case. It may cause the failure.
(3) In wiring, cares should be taken not to put the wiring remnants or foreign materials to the upper part of module. If something entered, it should be removed.
(4) The removal of module in the status of power ON is prohibited.
(5) When using the system of positioning control, please use it after you've set up the origin.
When Power On or Off, change of pulse output could occurred by Power On or Off.

3.3 Notices in Wiring

3.3.1 Notices in Wiring

(1)The length of connecting cable between positioning module and drive machine shall be as short as possible. (Max. length: 2m and 10m).
(2)For alternating current and external I/O signal of positioning module, it is required to use the separate cables to avoid the surge or induction noise generated from the alternating current.
(3)The wires should be selected considering surrounding temperature, allowable current and it is recommended to be more than max. size AWG22(0.3㎟).
(4)In wiring, if it is too close to the high temperature machine or material or it is directly contacted to the oil for a long time, the short-circuit will occur that may cause the damage or malfunction.
(5)Make sure to check the polarity before applying the external contact signal to the terminal board.
(6)In case of wiring the high voltage cable and power cables together, the induction noise occurs that may cause the malfunction or failure.
(7)In case of wiring by the pipe, the grounding of pipe is required.
(8)For the power supplied from outside (DC 5V, DC24V), it is required to use the safe and stable power.
(9)In case that there may be the noise source in wiring between positioning module and drive machine, it is required to use and connect Twist pair and shielded cable for the wiring of output pulse that comes from the positioning and enters into the motor drive.

3.3.2 Connection Example of Servo and Stepping Motor Drive Machine

Notes

▶ Connection example is applied when the input signal parameter of XPM is set as follows.

Upper limit signal: B contact, lower limit signal: B contact, DOG signal: A contact, Home signal: A contact, Emergency/Dec. stop signal: B contact, Speed position switching control signal: A contact, Drive ready signal: A contact, In-position signal: A contact

(1) MITSUBISHI

(a) MR-H□A Connection (Line Driver)

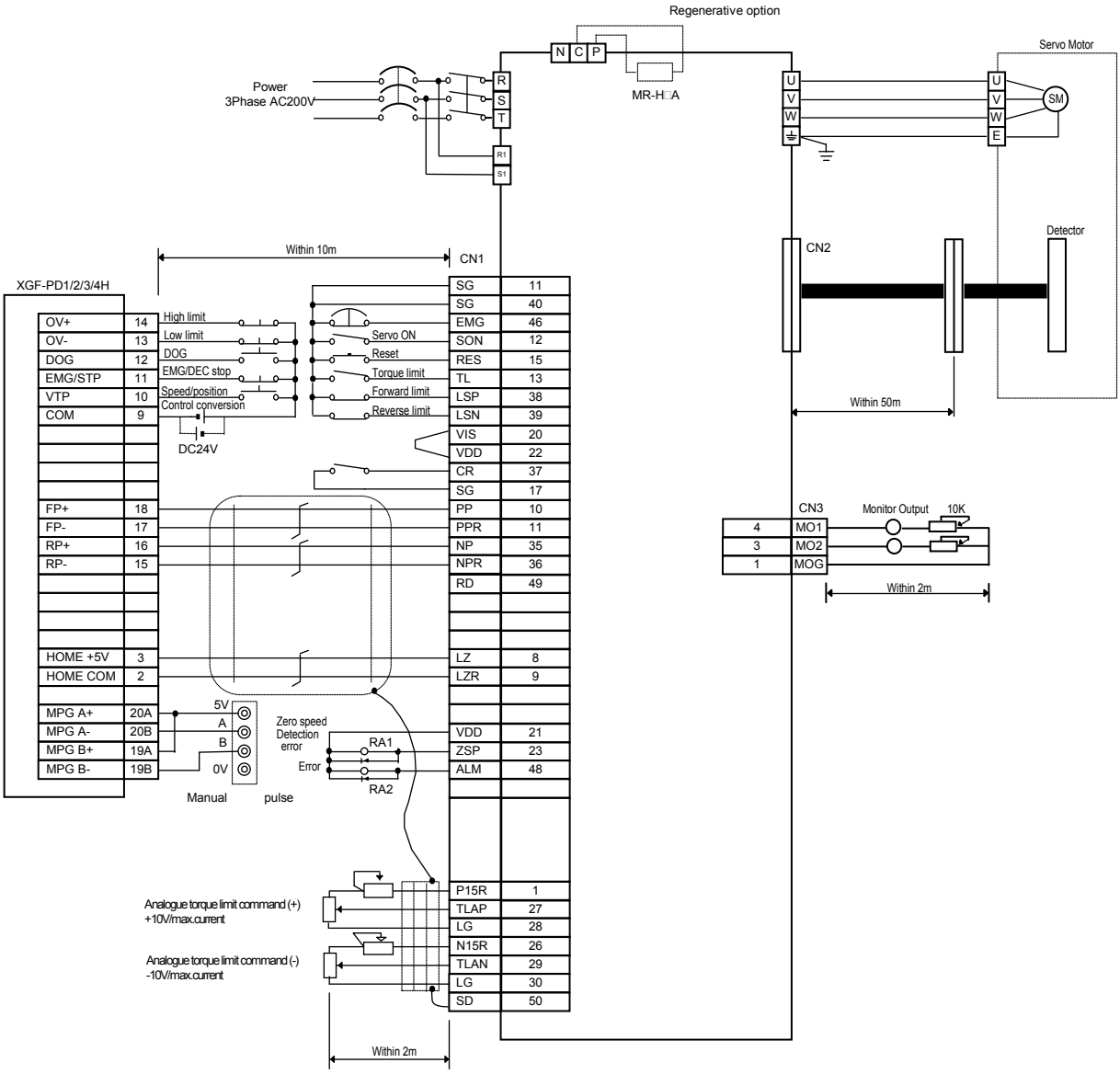

(b) MR-J2/J2S-□A Connection

1) Line Driver

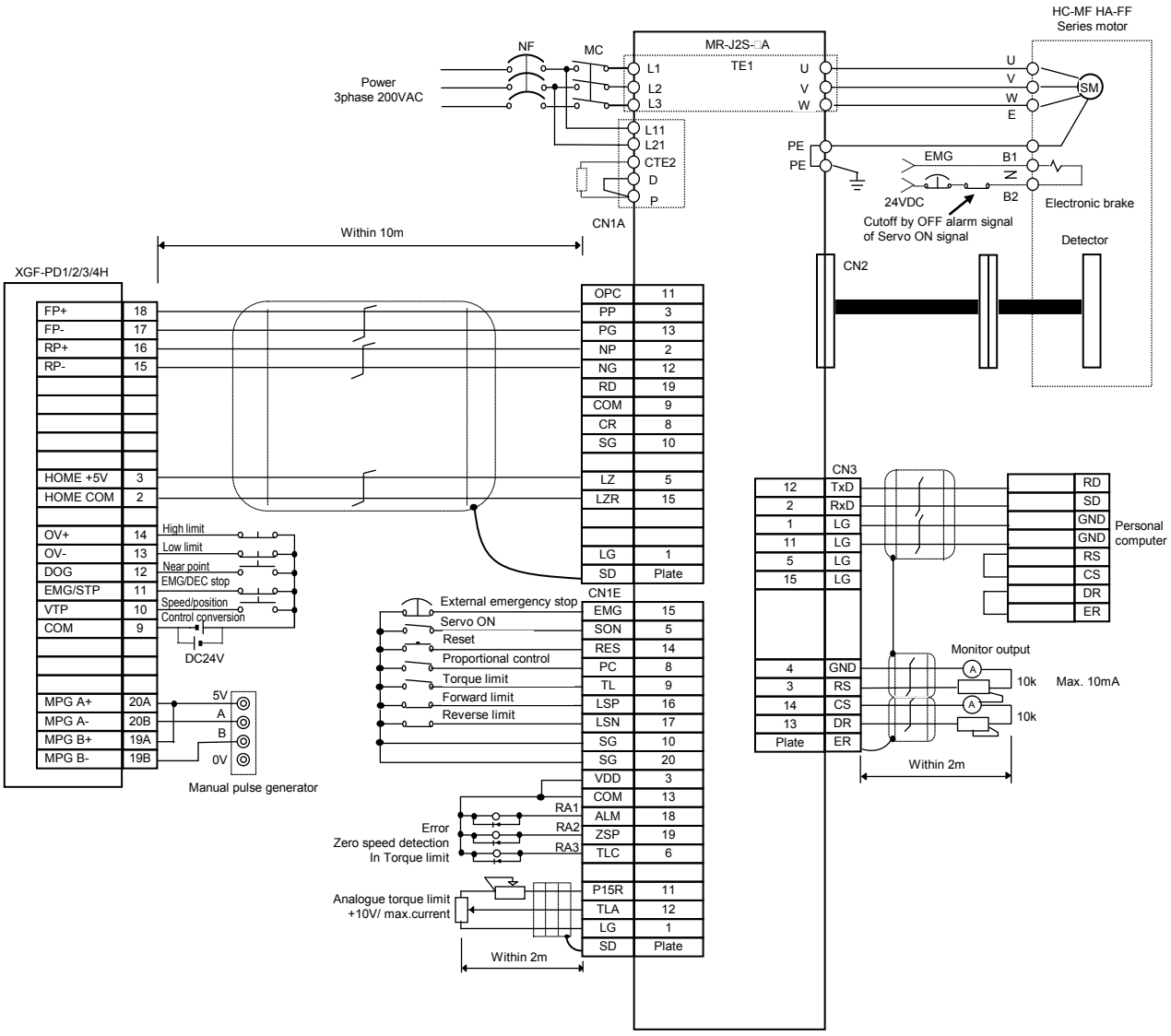

2) Open Collector

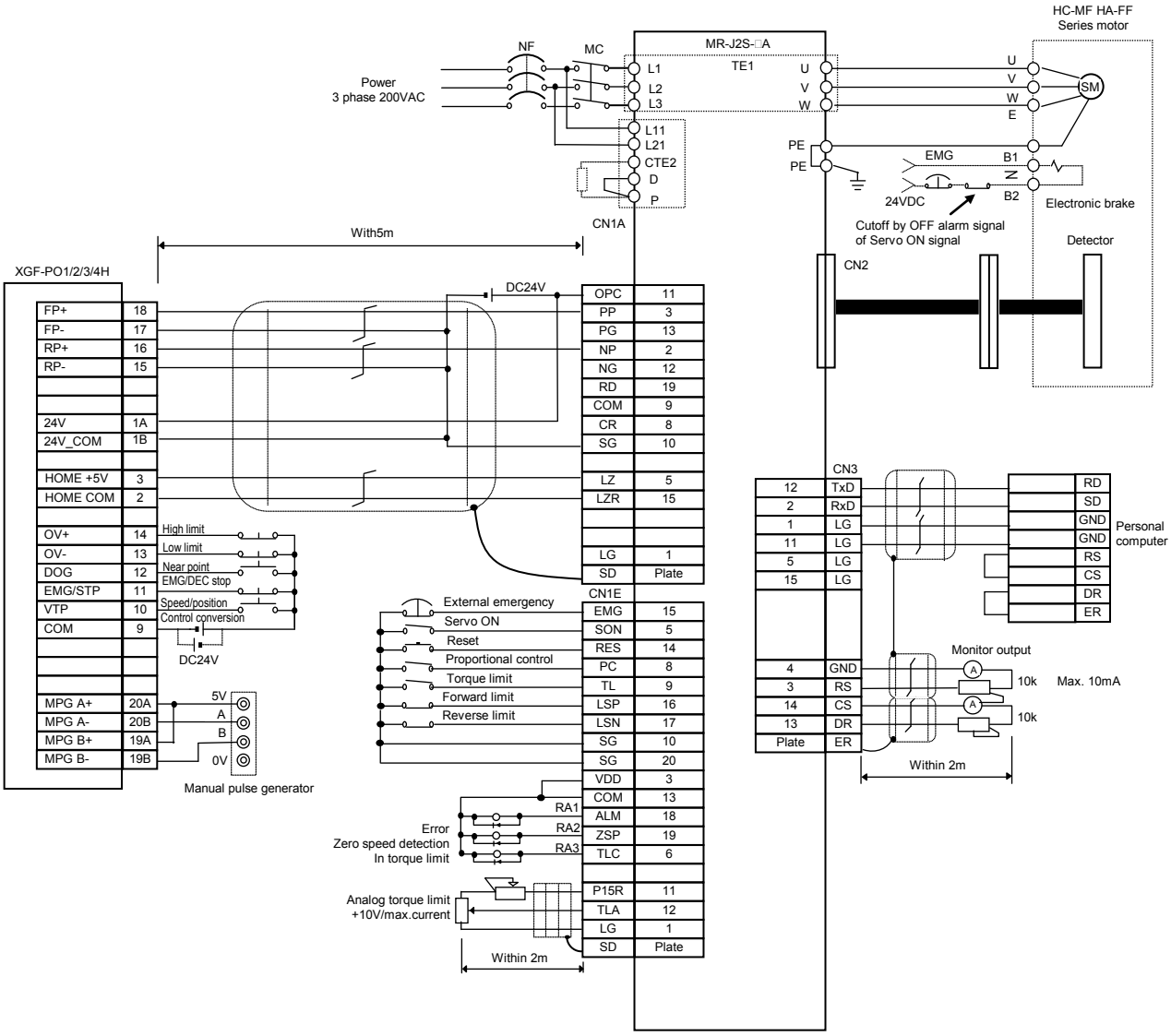

(c) MR-J3-□A Connection

1) Line Driver

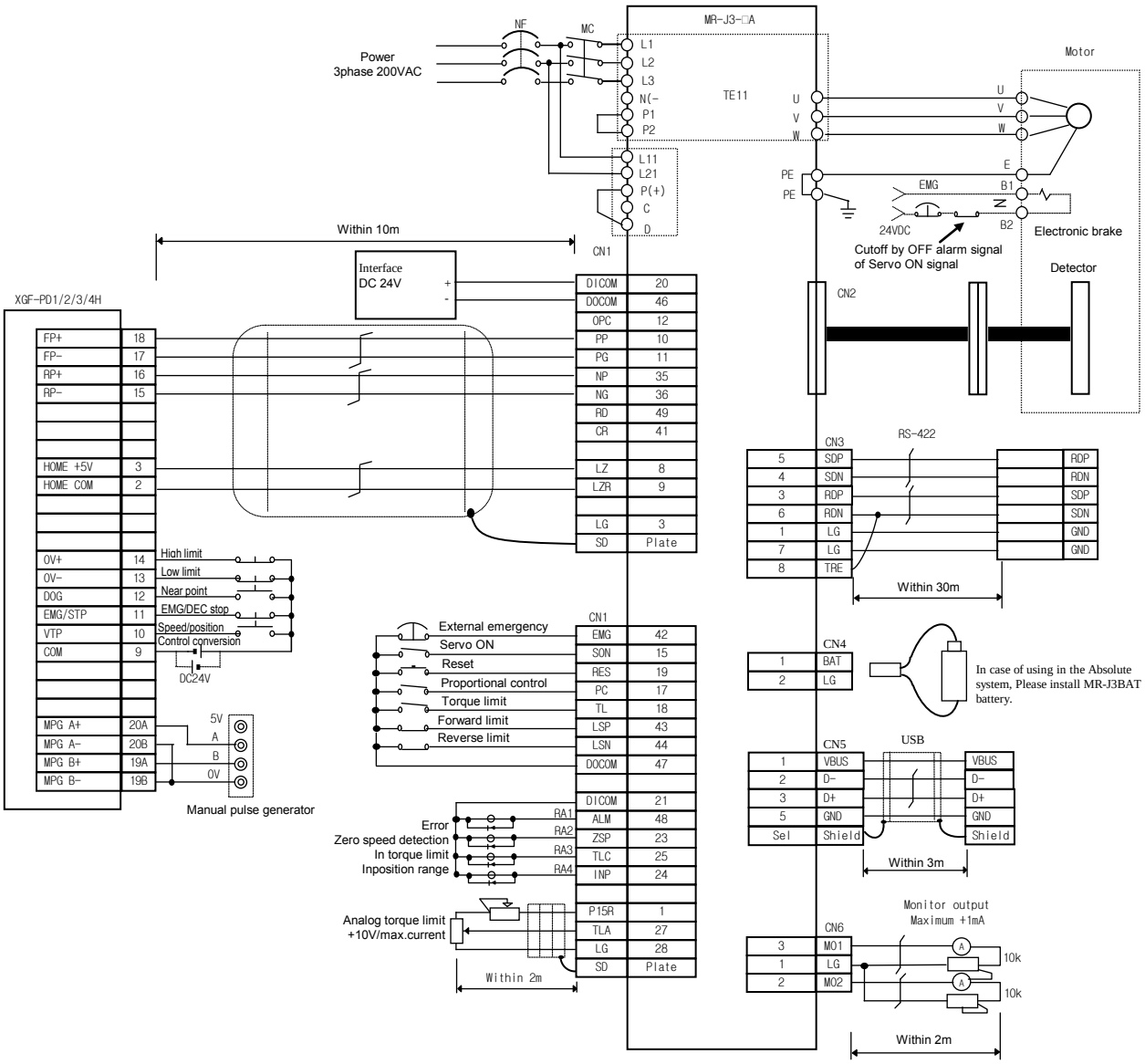

2) Open collector

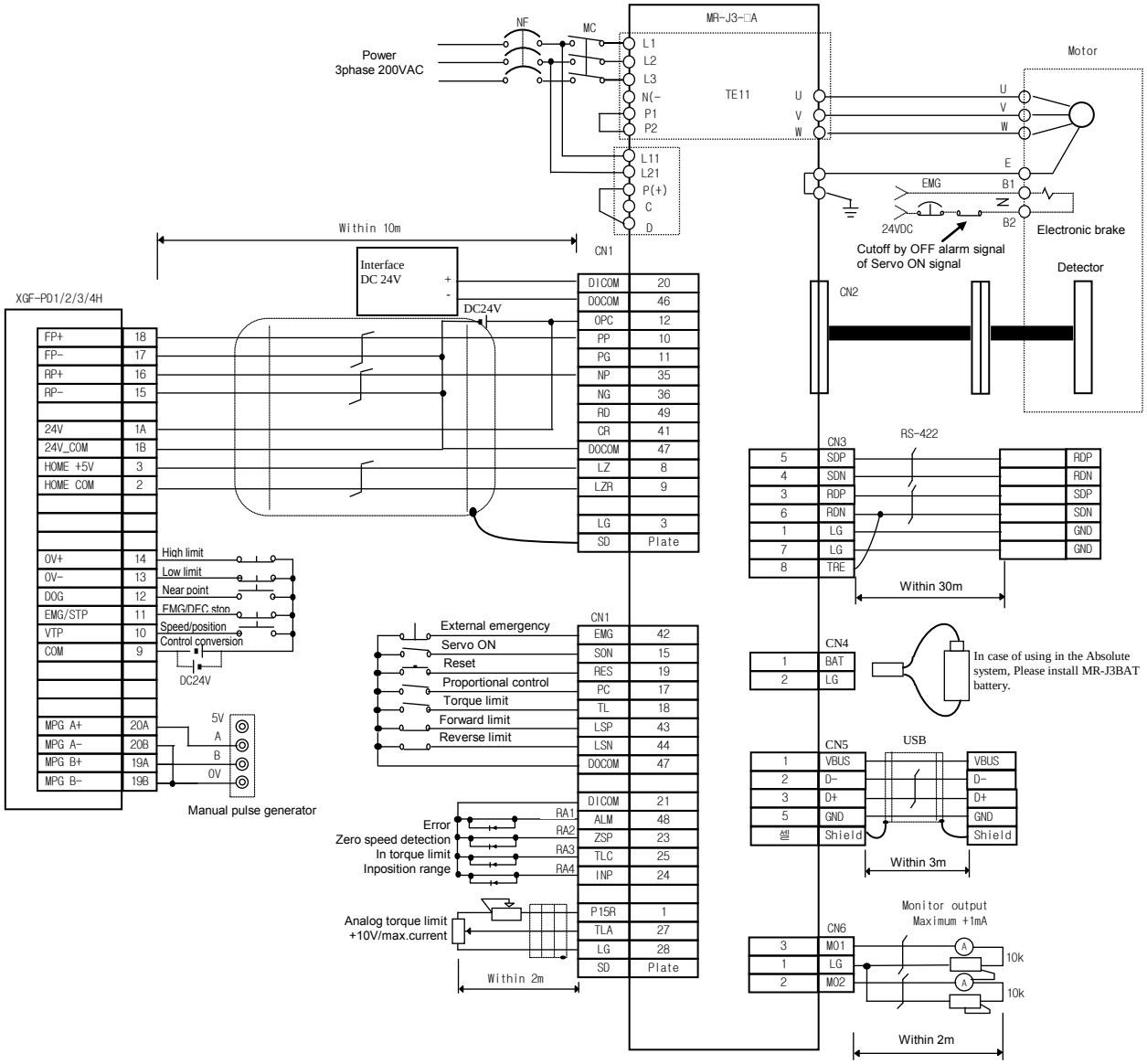

(d) MR-J□A Connection (Line Driver)

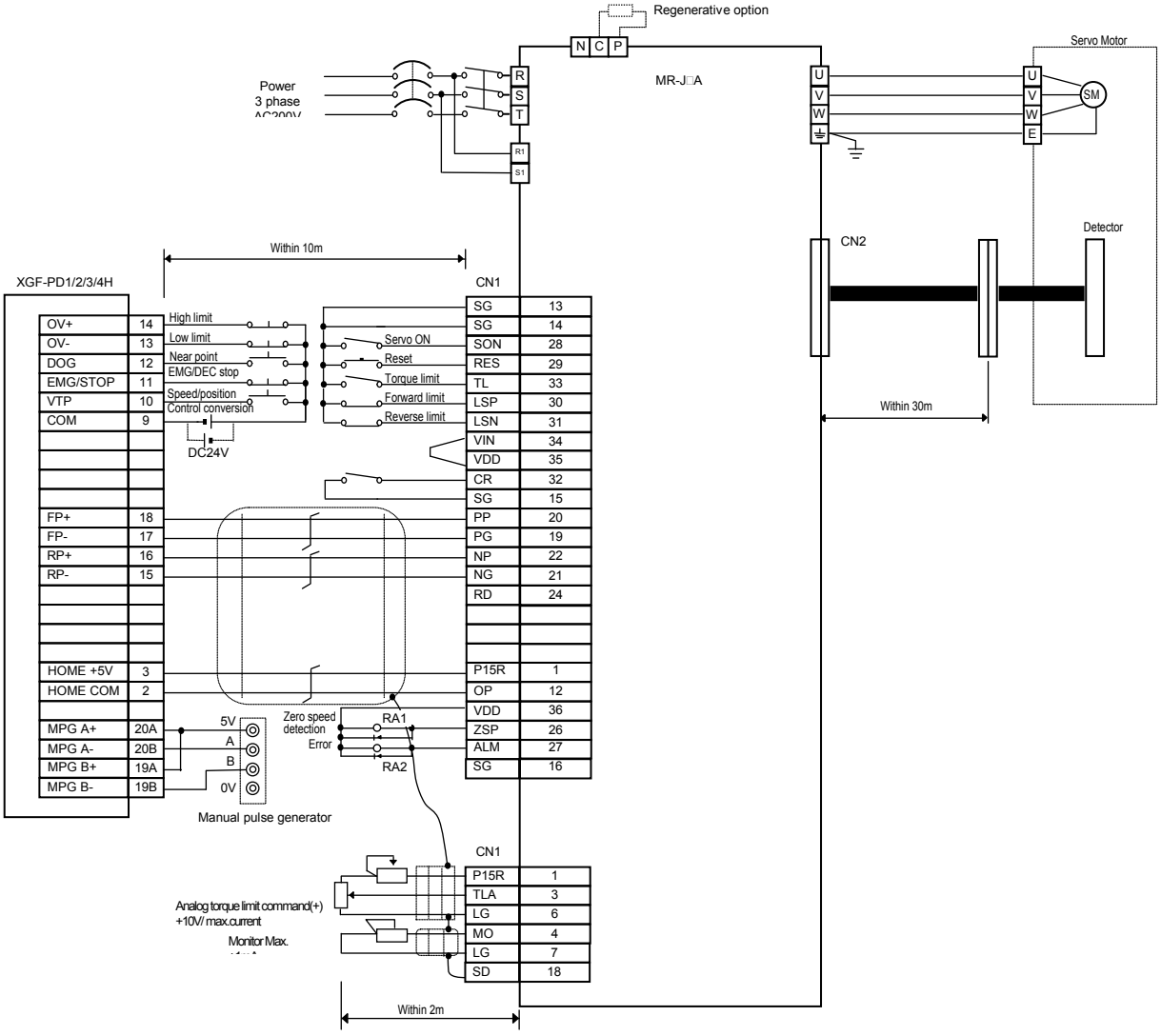

(d) MR-C□A Connection (Line Driver)

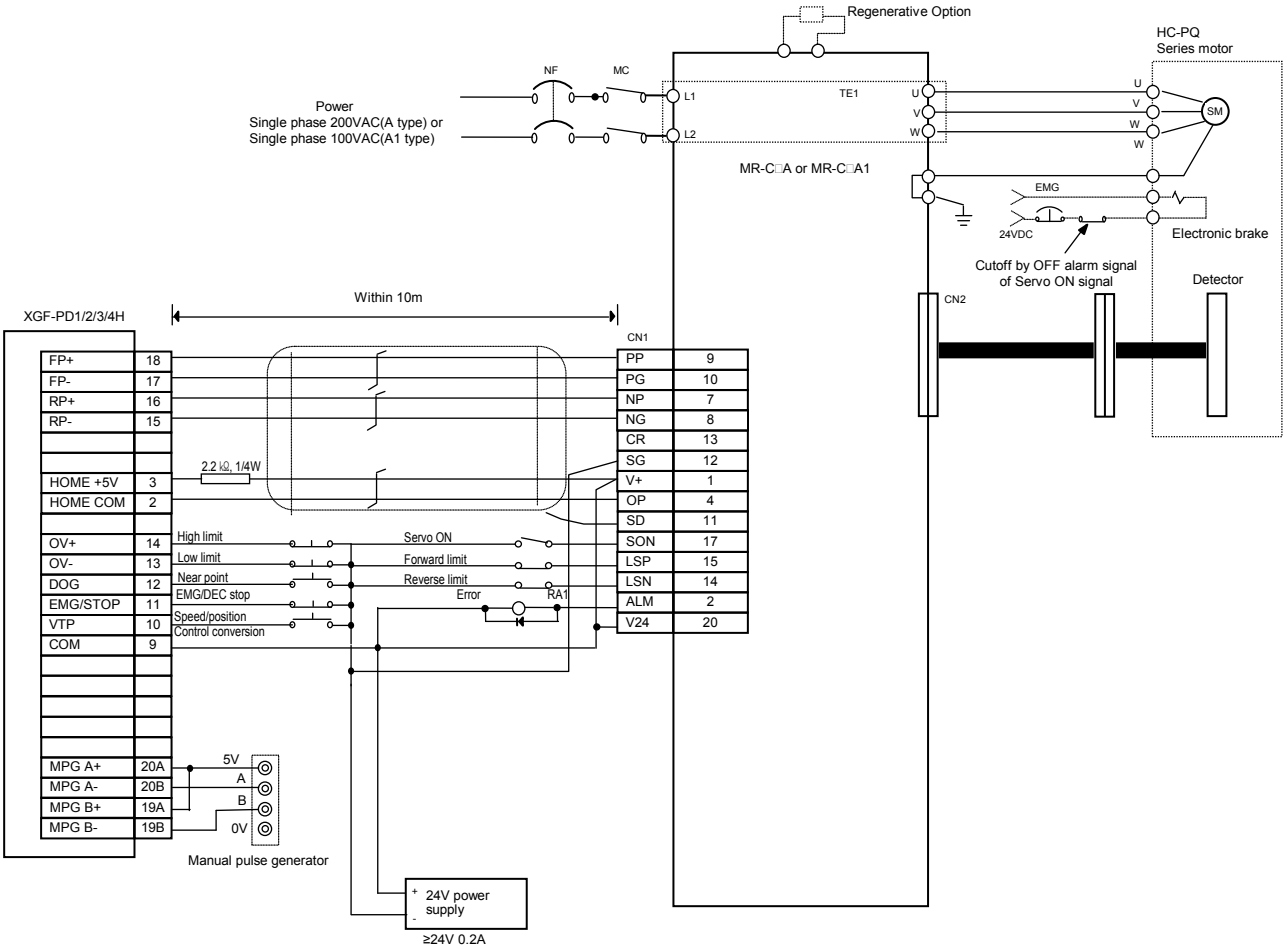

(2) PANASONIC

(a) A Series Connection (Line Driver)

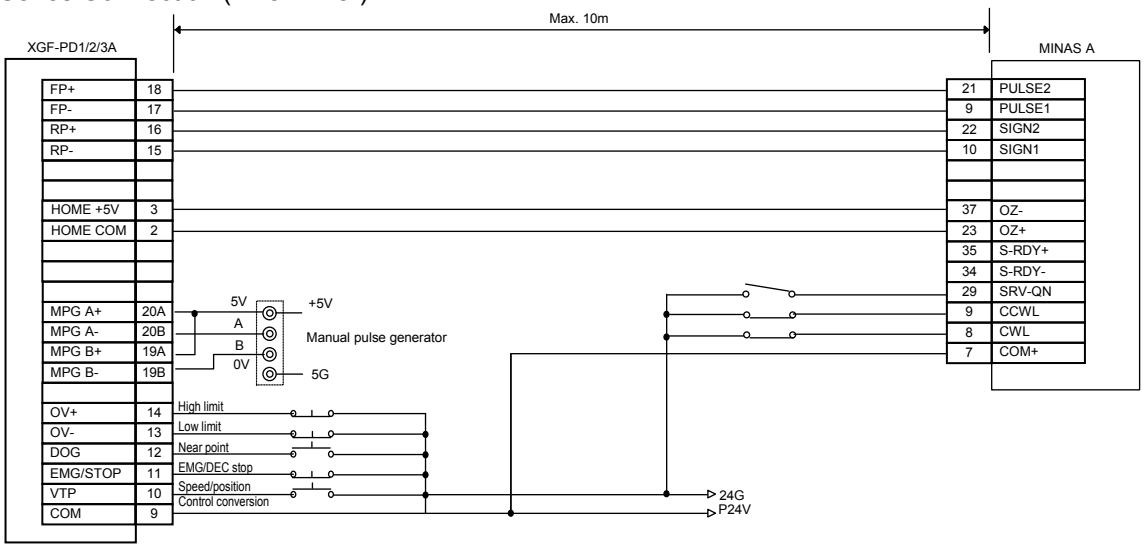

(3) VEXTA

(a) UDX2107 Connection

1) Open Collector

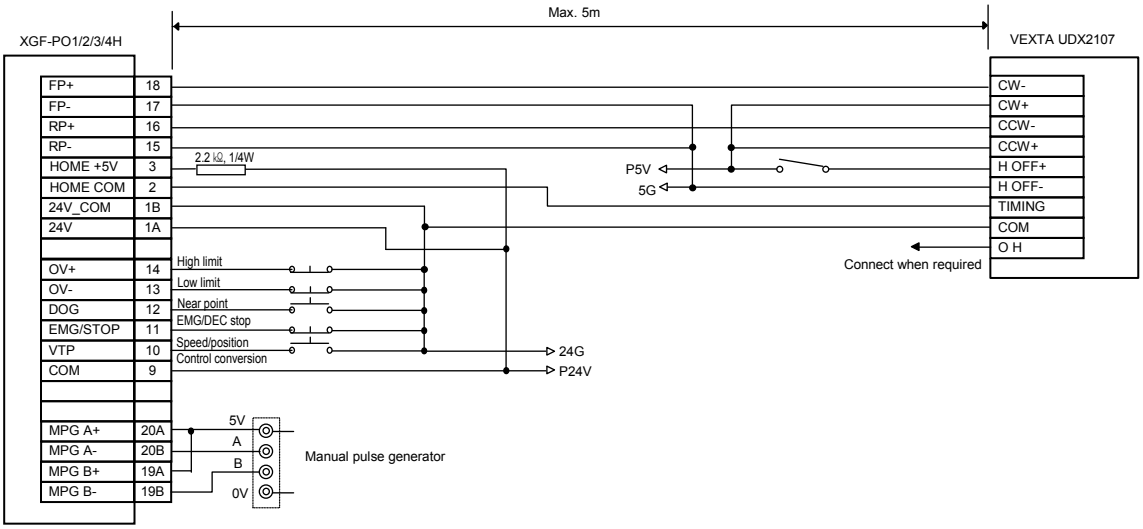

2) Line Driver

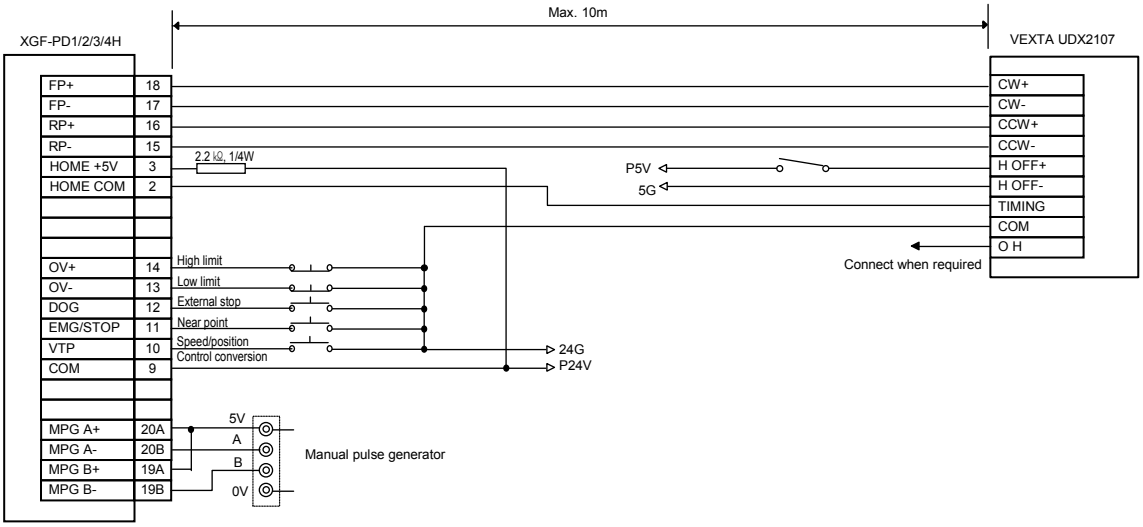

(b) UPD Connection

1) Open Collector

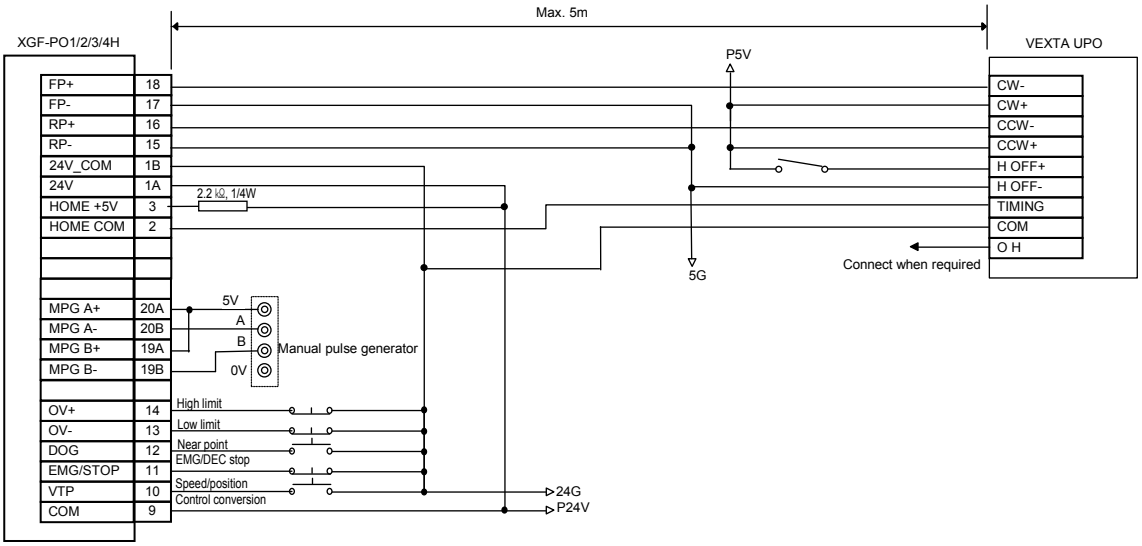

2) Line Driver

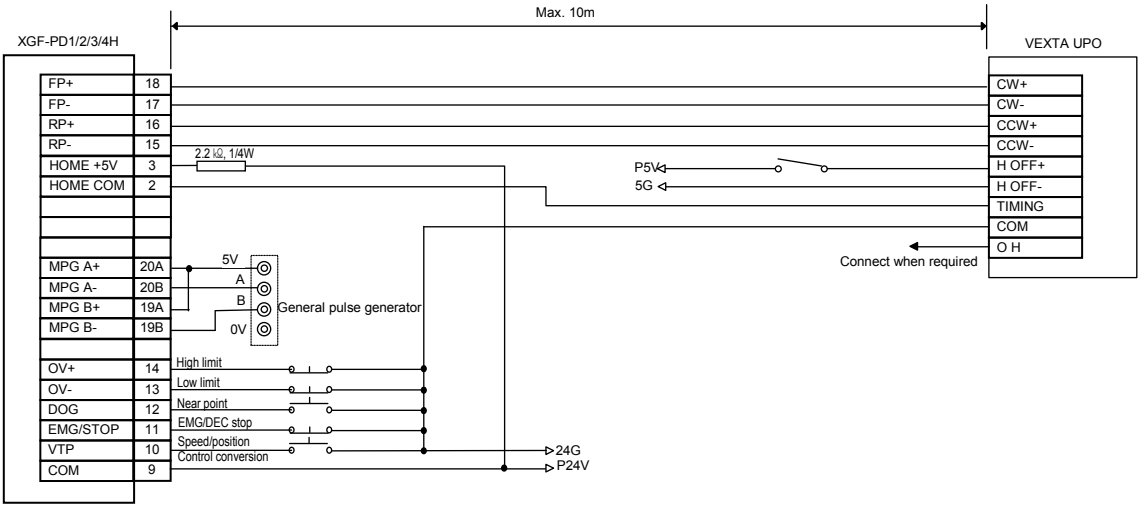

(c) FX Connection

1) Open Collector

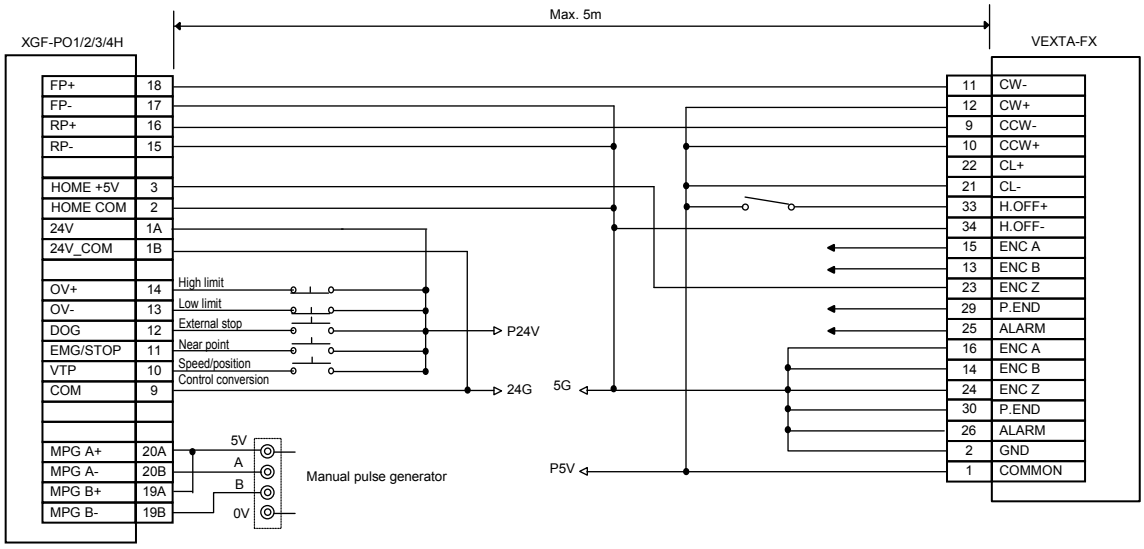

2) Line Driver

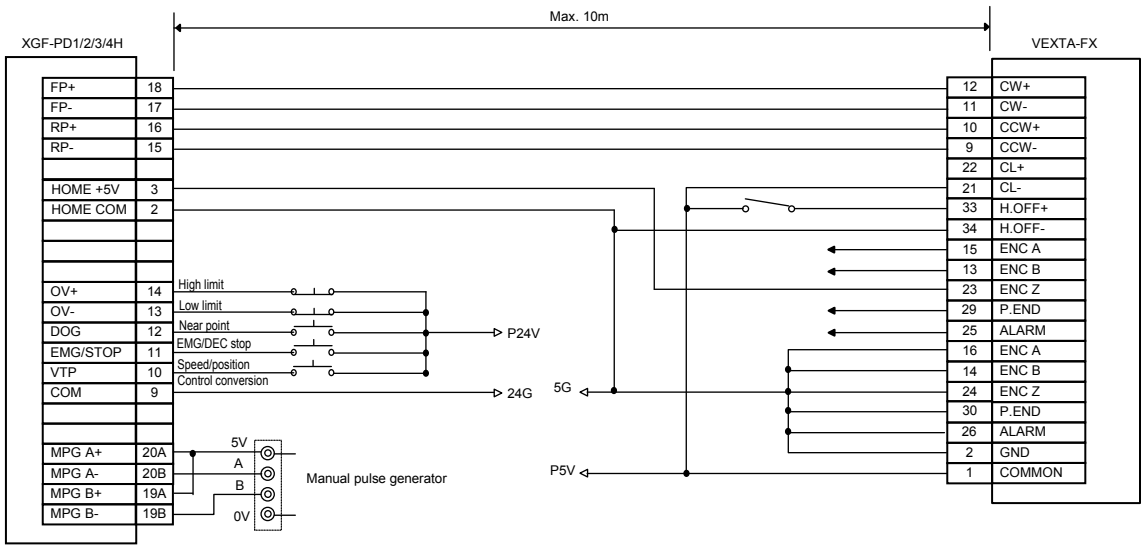

(4) Higen Motor

(a) FDA-3000 AC Servo Drive Connection

1) Open Collector

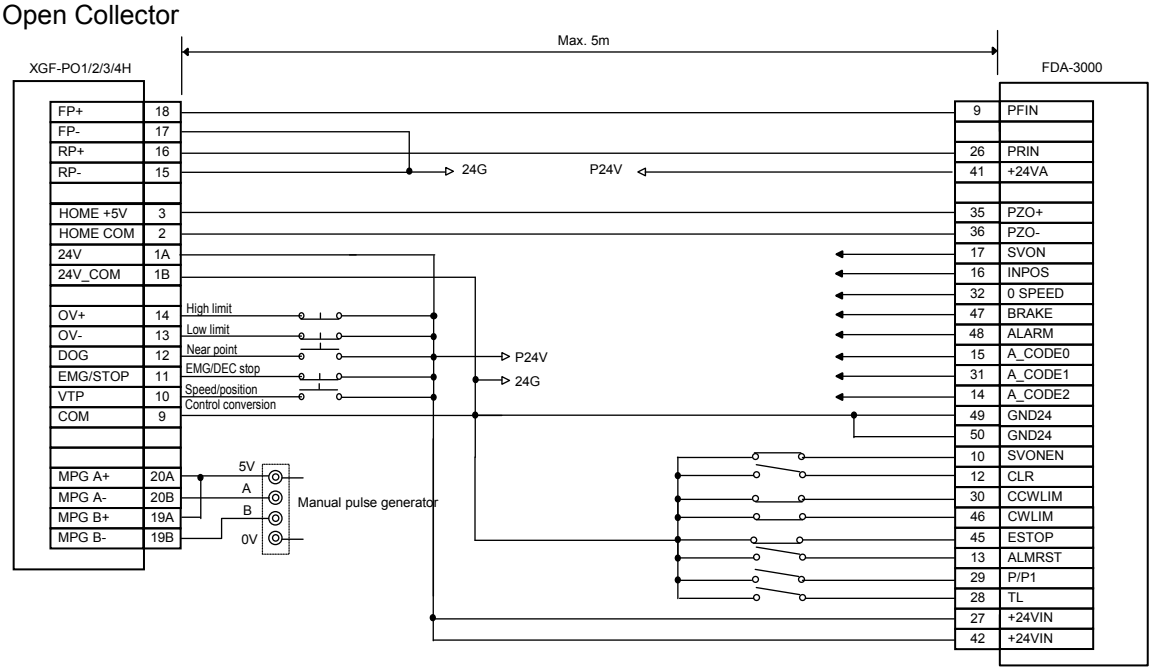

(b) FDA-5000/6000/7000 AC Servo Drive Connection

1) Open Collector

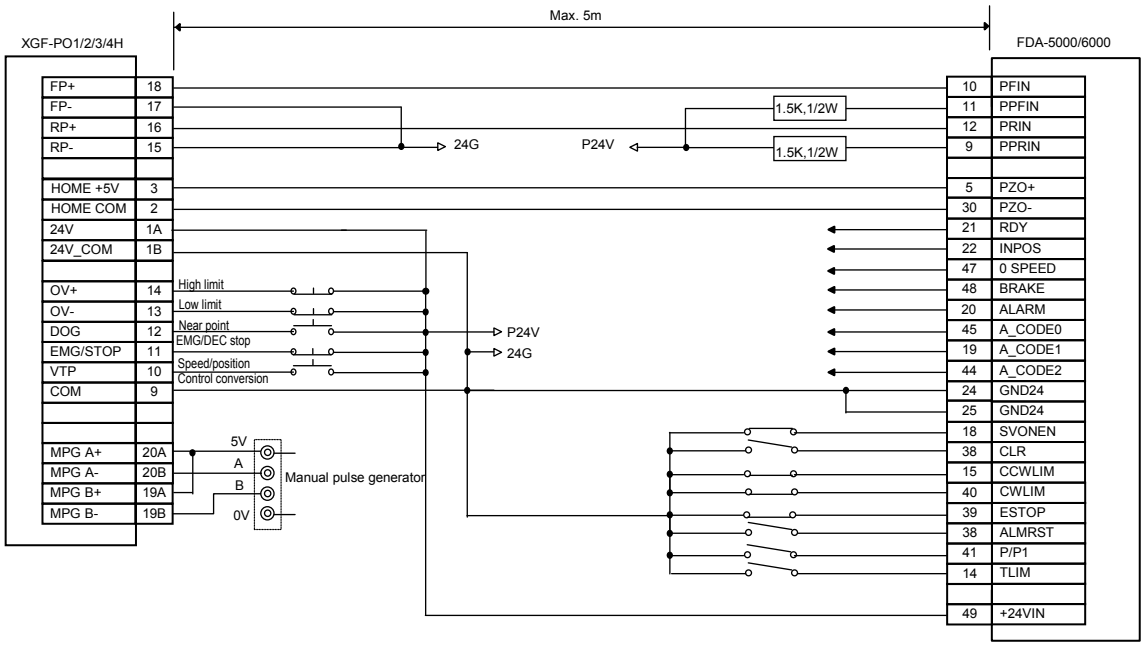

2) Line Driver

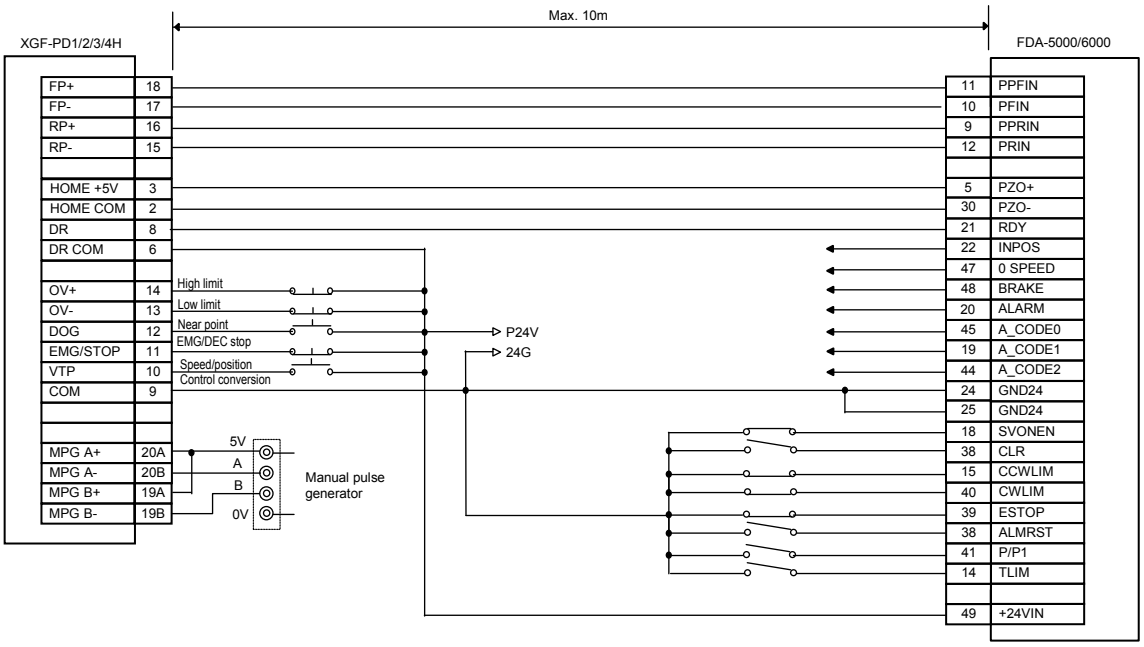

(5) YASKAWA

(a) CACR(R Series) Connection (Line Driver)

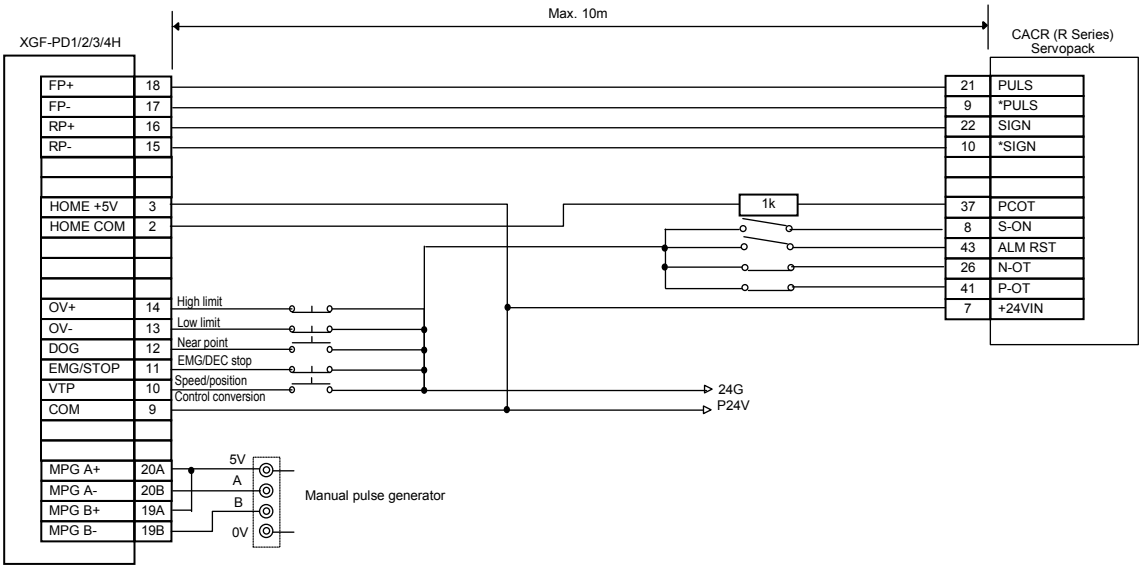

(b) SGDA-□□□P Connection

1) Open Collector

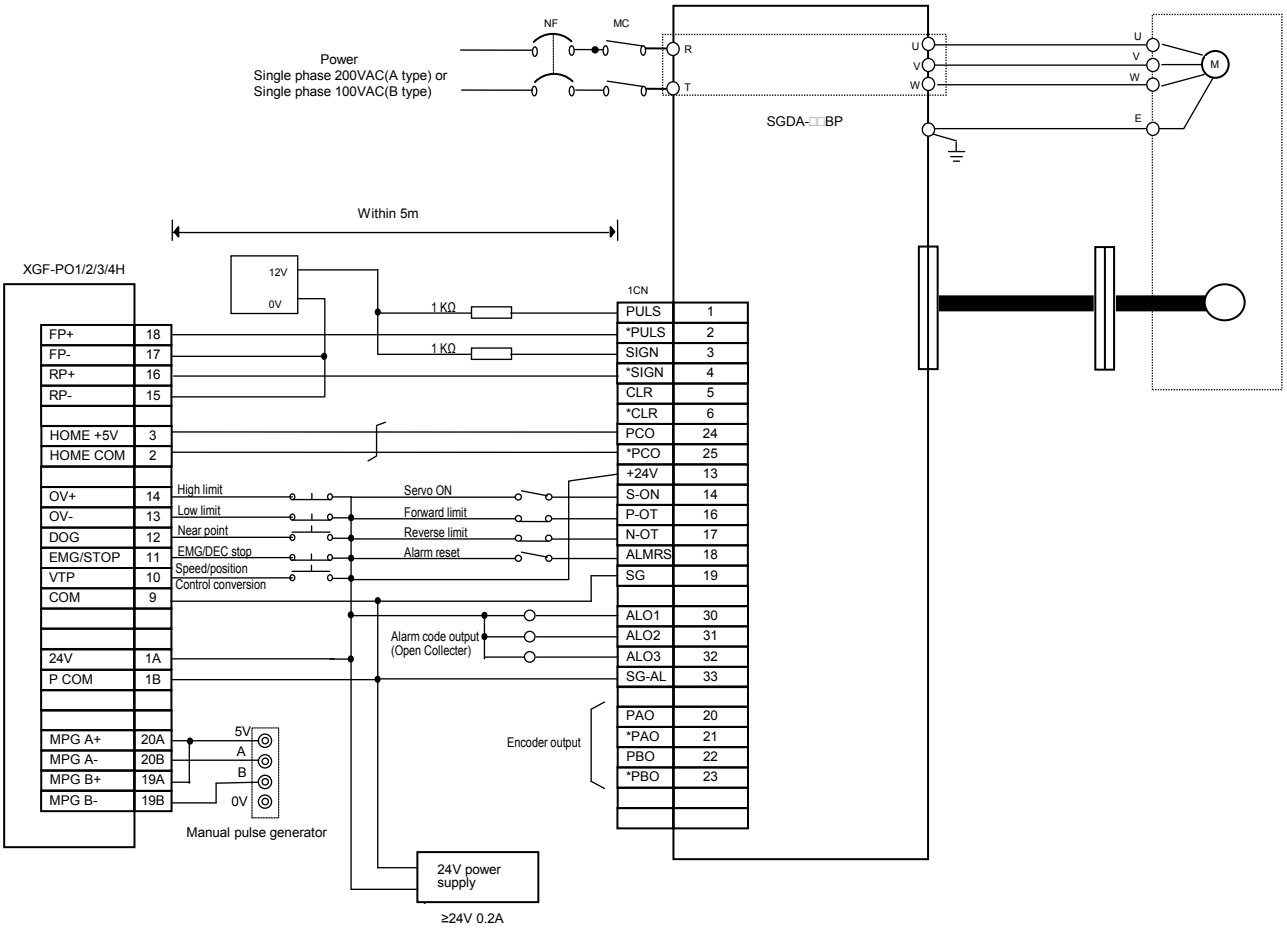

2) Line Driver

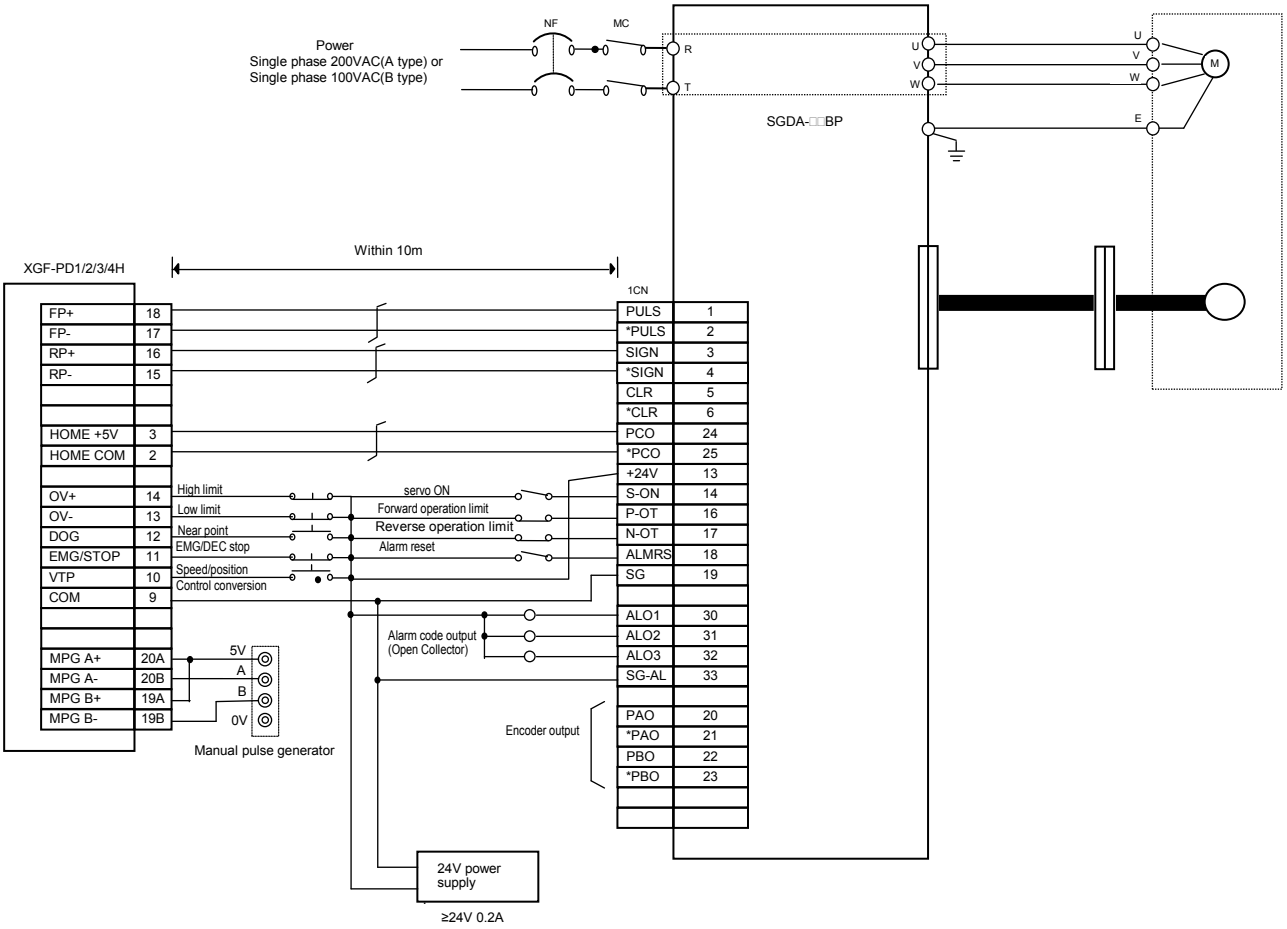

(b) ∑-Ⅱ Series SGDH AC Servo Drive Connection

1) Open Collector

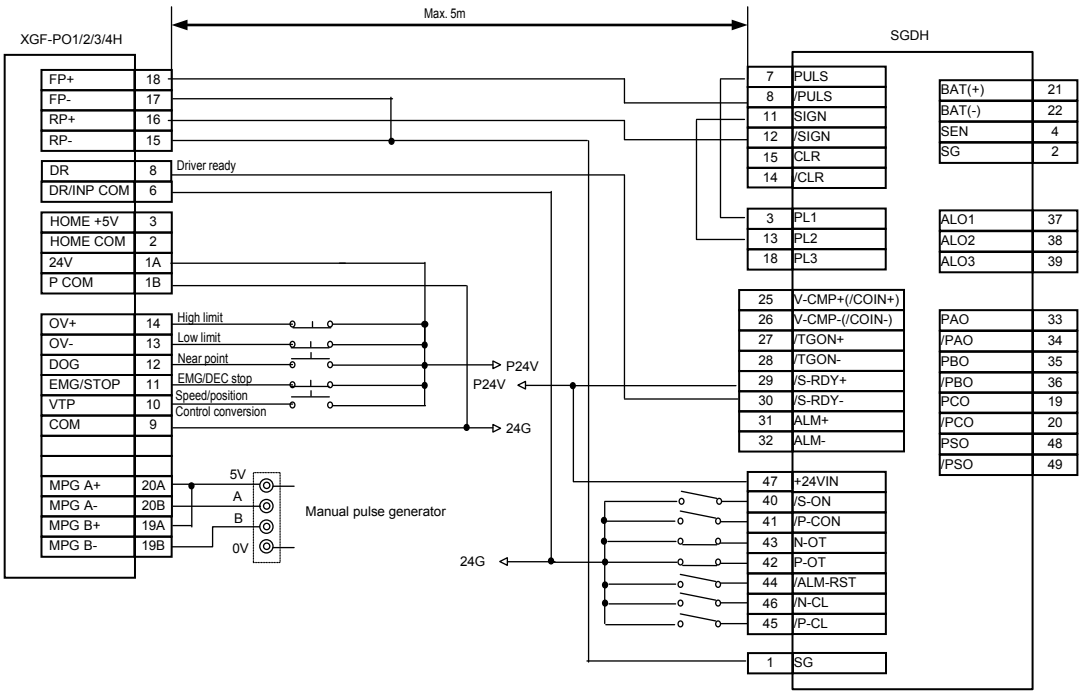

2) Line Driver

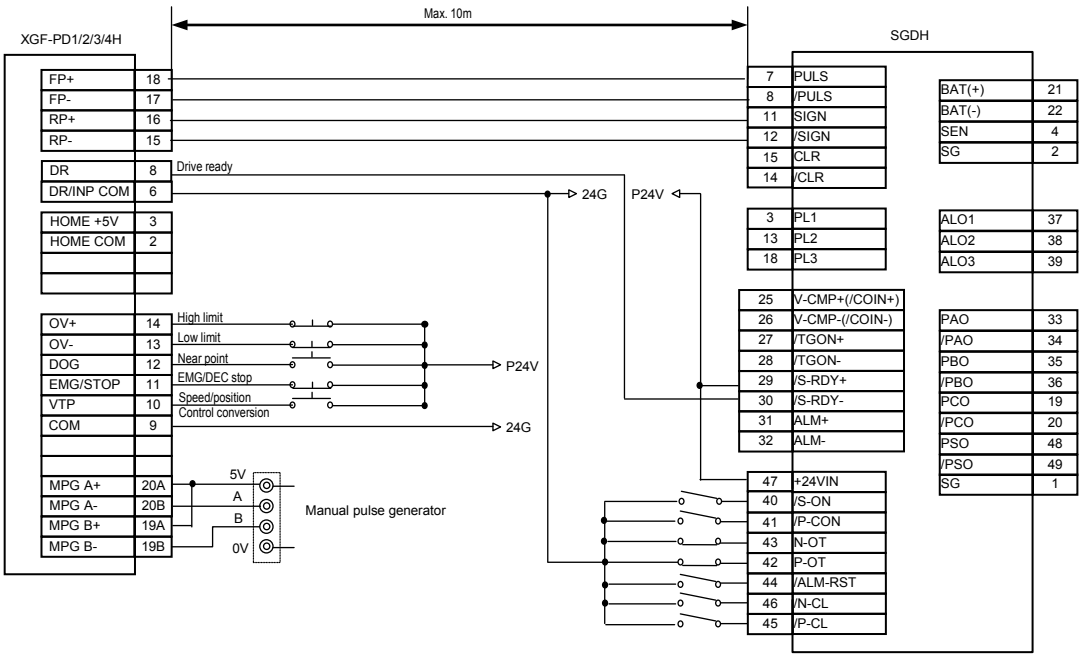

(c) ∑-Ⅲ Series SGDS AC Servo Drive Connection (Line Driver)

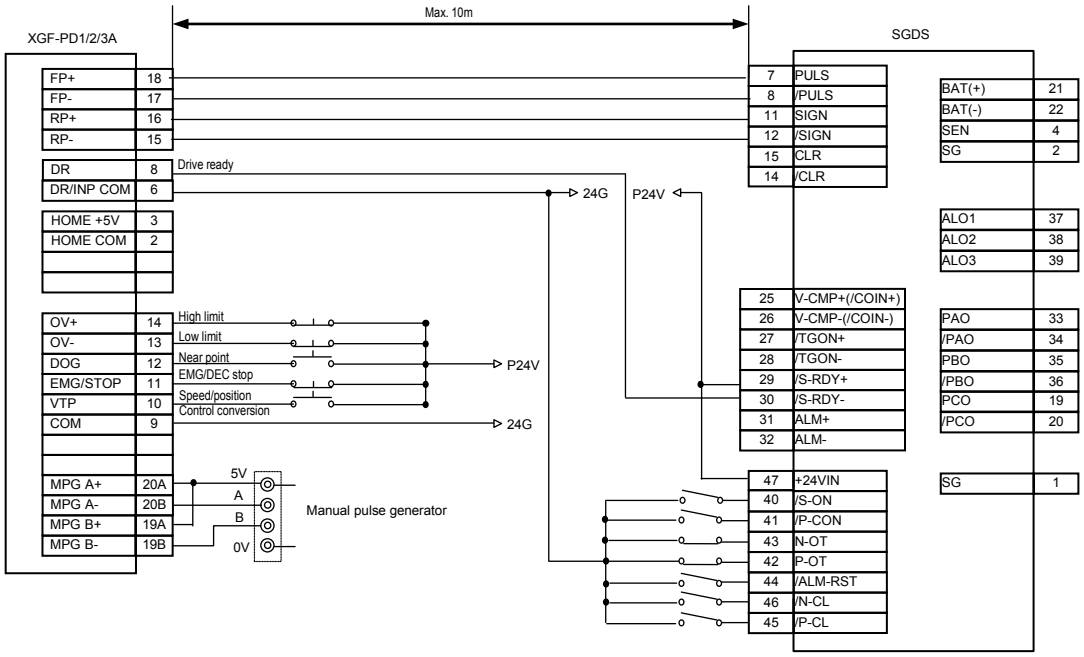

(6) LS Mecapion(L7)

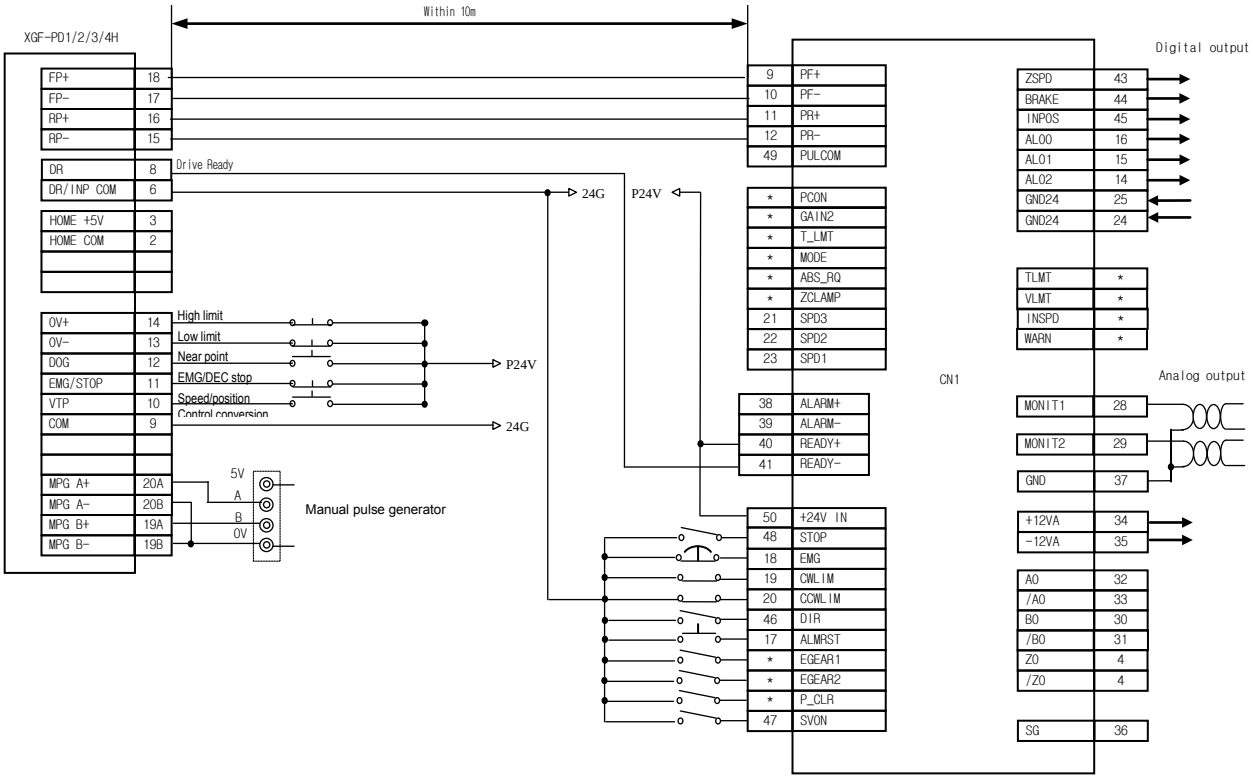

Note 1) Input signals DI1 to DIA and output signals DO1 to DO5 are default signals allocated by the factory.

Note 2) * These are non-allocated signals. You can change their allocation by setting parameters. For more information, refer to L7 sereis servo manual.

3.3.3 Encoder Input (DC 5V Voltage Output) Wiring Example

When Pulse Generator is a Voltage Output type, wiring example of positioning module and Encoder entry are as follows.

In case pulse generator is totem-pole output and used as voltage output style, wiring is equal.

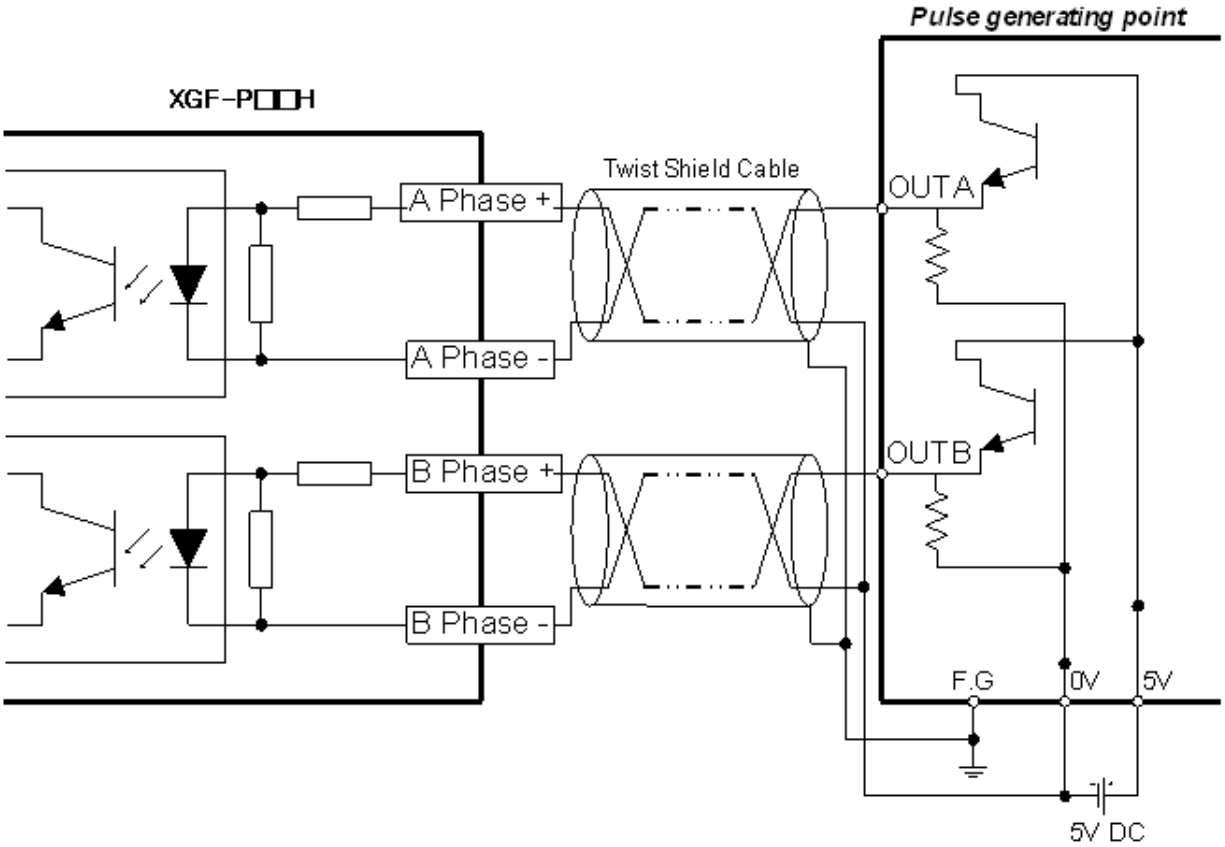

Notes
Before Wiring, please consider maximum output distance of pulse generator.

3.3.4 Encoder Input (5V Line Driver Output) Wiring Example

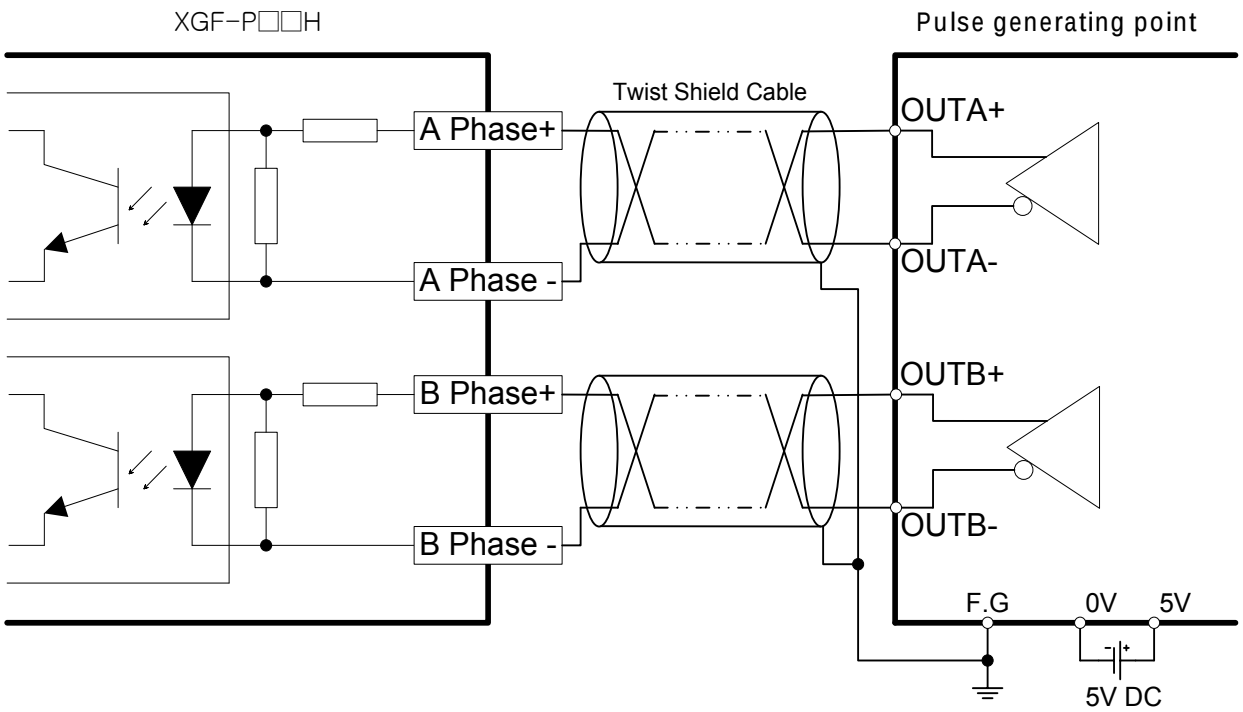

Notes

Before Wiring, please consider maximum output distance of pulse generator.

Chapter 4 Positioning Parameter & Operation Data

▶ This chapter describes parameter and operation data to be set by software package with positioning module.

▶ Item of Parameter and operation data should be set for each axis.

(But common parameter shall be applied to all axes equally)

4.1 Parameter & Operation data

▶ This picture describe process of parameter and operation data saved in the module.

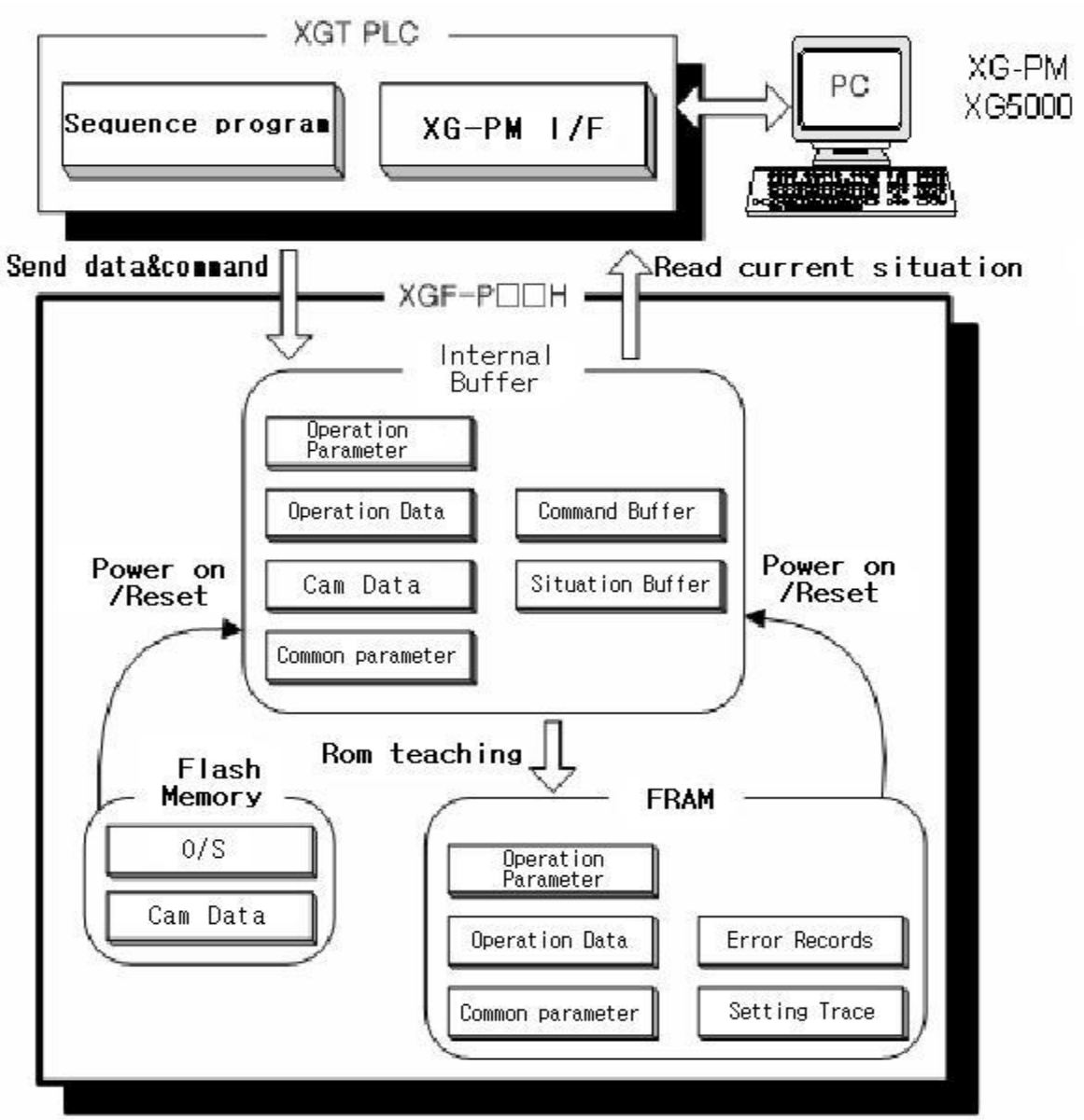

4.2 Basic Parameter

▶ Here describes about basic parameter of positioning module.

4.2.1 Basic parameter

Basic parameter item		Setting range
Speed limit		㎜ : 1 ~ 2,147,483,647 [X10^{-2} ㎜/min] Inch : 1 ~ 2,147,483,647 [X10^{-3}Inch/min] degree : 1 ~ 2,147,483,647 [X10^{-3} degree/min] pulse : 1 ~ 2,147,483,647 [pulse/sec]
Acceleration time 1		0 ~ 2,147,483,647 [ms]
Acceleration time 2		
Acceleration time 3		
Acceleration time 4		
Deceleration time 1		0 ~ 2,147,483,647 [ms]
Deceleration time 2		
Deceleration time 3		
Deceleration time 4		
Deceleration time for EMG stop		0 ~ 2,147,483,647 [ms]
Pulse per rotation		1 ~ 200,000,000
Travel per rotation		
Control word	unit (bit 2 ~ 3)	0:Pulse, 1:mm, 2:Inch, 3:Degree
	Unit multiplier (bit 4 ~ 5)	0: x 1, 1: x 10, 2: x 100, 3: x 1000
	Speed command unit (bit 6)	0: unit/time, 1: rpm
Pulse output mode		0:CW/CCW, 1:PLS/DIR, 2:PHASE
Bias speed		㎜ : 1 ~ 2,147,483,647 [X10^{-2} ㎜/min] Inch : 1 ~ 2,147,483,647 [X10^{-3}Inch/min] degree : 1 ~ 2,147,483,647 [X10^{-3} degree/min] pulse : 1 ~ 2,147,483,647 [pulse/sec]

Notes

For Deceleration time in case of stop, when it stops by DEC. stop, DEC. time set in command is applied. At this time, if DEC. time is set as 0 in command, DEC. time set in basic parameter is applied. In case it stops by EMG stop because of internal factor, not external factor, EMG stop deceleration time in basic parameter is applied.

4.2.2 Basic parameter setting

(1) Unit

(a) You can set the command unit for positioning control according to control object. The command unit (mm, inch, pulse, degree) can be set for each axis separately.

(b) In case of changing the unit setting, as the value of other parameter and operation data does not change, the value of parameter or operation data should be set within the setting range of the unit to be changed.

Ex) mm, inch, pulse : X-Y Table, Conveyor

degree : a body of rotation (360degree/rotation)

(2) Pulse per Rotation

(a) Only in case of using mm, inch, degree as a positioning command unit, you should set pulse per rotation

(b) In case of using SERVO, you should set the value of "the number of out put pulse per rotation". If the value does not correspond with parameter value of servo drive, command and motor action can be different.

Travel per pulse = Transfer per rotation (Al) / Pulse per rotation (Ap)

(3) Travel per rotation and unit multiplier

(a) Only in case of using mm, inch, degree as a positioning command unit, you should set travel per rotation and multiplier

(b) Machine's travel per rotation of motor is determined by the structure of machine.

If the lead of ball screw (mm/rev) is PB and the rate of deceleration is 1/n,

Transfer amount per rotation (AL) = PB ×1/n.

(c) Settable Travel per rotation (Al) is listed below

Setting unit	mm	Inch	degree
Travel per rotation	0.1 ~ 20000000.0 um	0.00001 ~ 2000.00000 inch	0.00001 ~ 2000.00000 degree

In case AL exceeds the above range, The travel per rotation (Al) should be set as follows:

Transfer amount (AL) = PB ×1/n

= Travel per rotation (Al) × Unit multiplier (Am)

Note)

In case unit is mm, unit multiplier (Am) is 1,10,100,1000.If the value of "PB ×1/n" exceeds 20000000.0 ㎛, it is required to adjust the unit multiplier so that the travel per rotation (Al) does not exceed 20000000.0 ㎛.

Ex1) In case that (AL) = PB ×1/n = 2500000.0 ㎛(= 2500 ㎜),

(AL) = (Al) × (Am) = 25000000 ×1

Ex2) In case that (AL) = PB ×1/n = 25000000.0 ㎛(= 25000 ㎜),

(AL) = (Al) × (Am) = 25000000 ×10

= 2500000 ×100

(4) Speed Limit, Acceleration Time, Deceleration Time

(a) Speed Limit

Speed limit is maximum speed can be set by positioning operation.

All of the operating speed should be set to be lower than speed limit in positioning operation.

(b) Acceleration Time

The time required to reach from speed “0” (stop state) to the speed limit which is set by parameter.

(It doesn’t mean that the time require to reach to the operation speed.)

(c) Deceleration Time

The time required to reach from the speed limit set by parameter to the bias speed “0” (stop state).

(It doesn’t mean that the time require to reach from the operation speed to the speed “0”.)

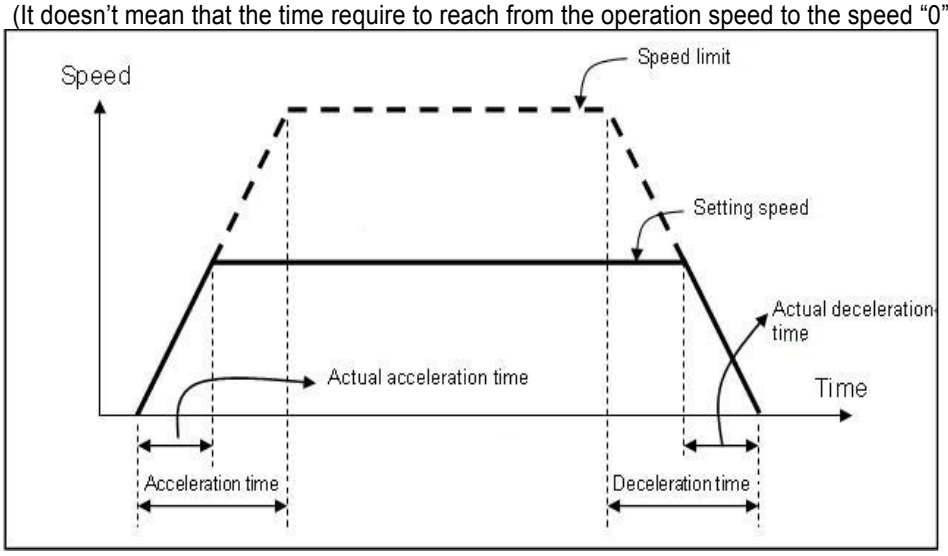

(5) Pulse Output Mode

As input method is different according to the connected driver, it is required to select pulse output mode of positioning module according to the input method.

(a) CW/CCW mode

Forward pulse and reverse pulse comes from different terminal. The following shows pulse output in case pulse output level is Low Active.

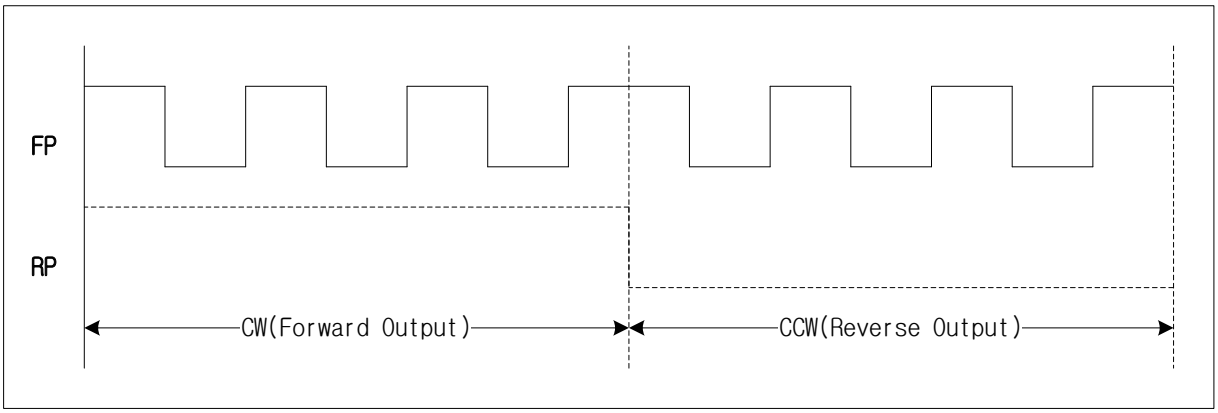

(b) PLS/DIR mode

Forward pulse and reverse pulse are outputted from one terminal and the forward/reverse discrimination signal is outputted from different terminal. The following shows pulse output in case pulse output level is Low active.

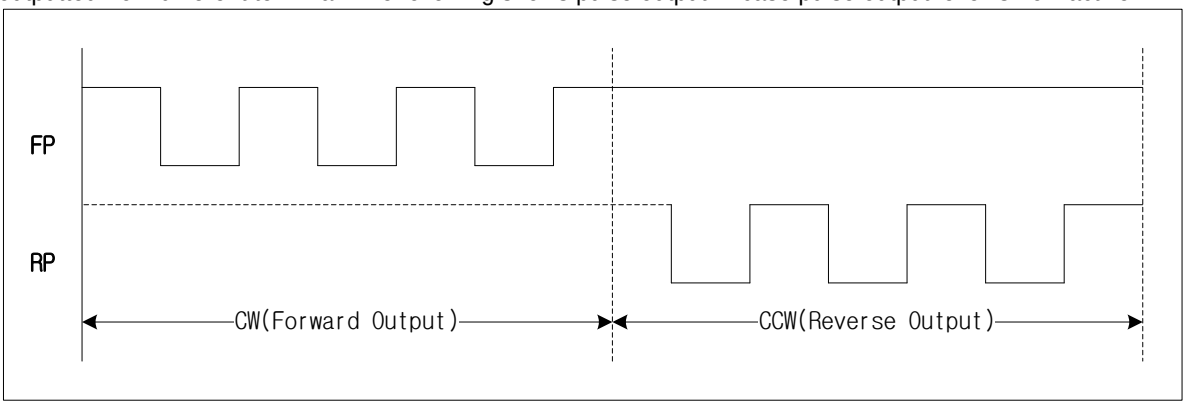

(c) PHASE A/B mode

▶Forward pulse and reverse pulse will be outputted with 90degree phase difference. The following shows pulse output in case pulse output level is Low active.

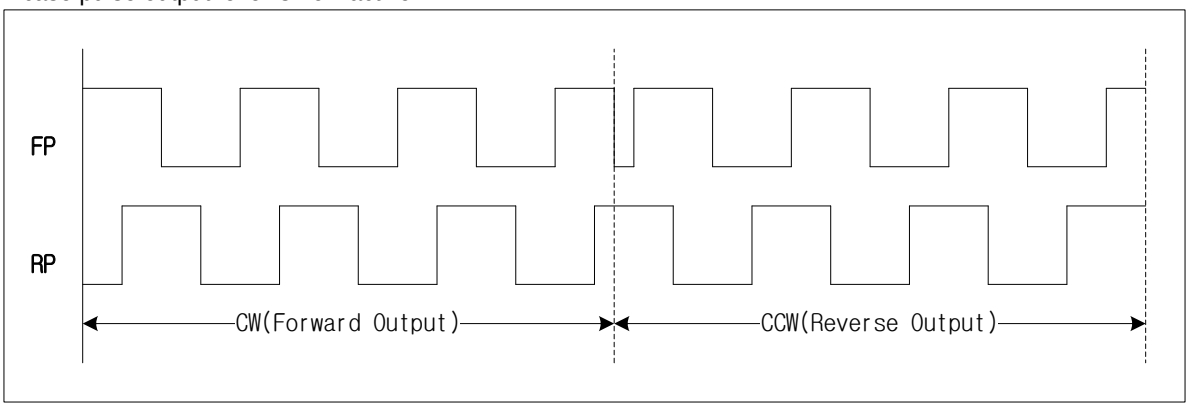

(6) Bias Speed

▶ As the stepping motor has unstable torque near speed=0, Speed from 0 to bias speed is skipped in operation to smooth the rotation of motor and reduce the positioning time.

▶ The setting range is 0 ~ 500,000[pps] for Open Collector type and 0 ~ 4,000,000[pps] for line driver.

▶ Bias speed shall be used for the main axis of

① positioning operation by start command,

② homing operation,

③ JOG operation,

④ Main axis of interpolation operation (subordinate axis is not available).

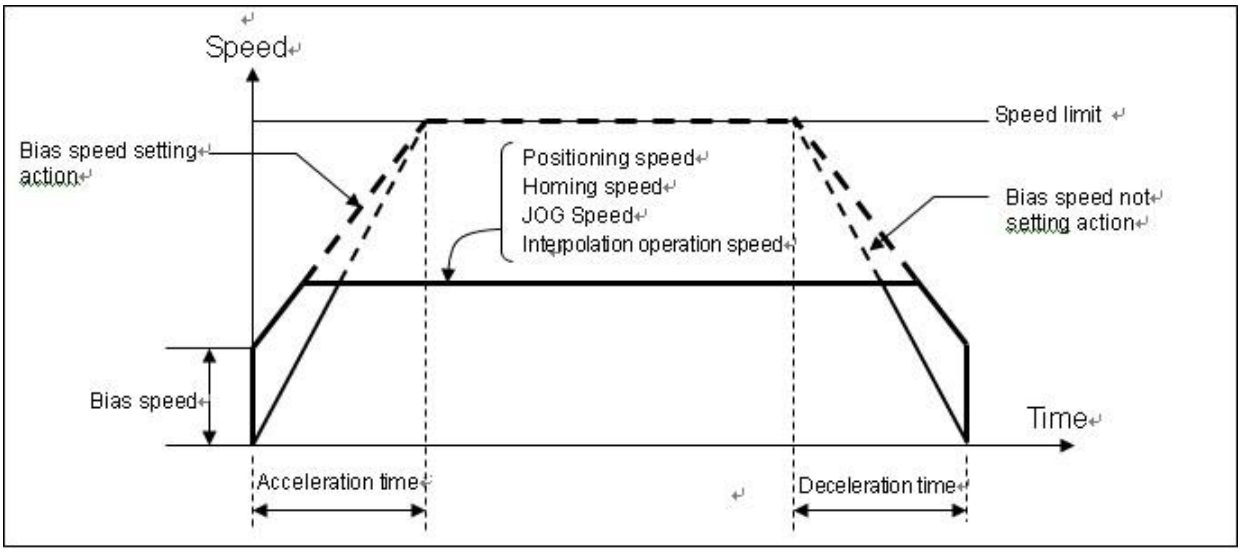

Note

(1) If Bias speed is set as high, total operation time shall be reduced but if the setting value is too high, it may cause the occurrence of impact sound in the start/end time and forces the excessive effect to the machine. Cares shall be taken in using.

(2) The bias speed should be set within the range as follows :

1) Bias speed ≤ Positioning speed data
2) Bias speed ≤ Homing-low speed ≤ Homing-high speed
3) Bias speed ≤ JOG low speed ≤ JOG high speed

(3) It causes error in connection with bias speed in the following example.

1) Bias speed > Positioning speed data : error code 153
2) Bias speed > Homing-high speed : error code 133
3) Bias speed > Homing-low speed : error code 134
4) Bias speed > JOG high speed : error code 121
5) Bias speed > JOG high speed : error code 122
6) Bias speed > inching speed : error code 123

4.3 Extended Parameter

▶ It describes about extended parameter of positioning module.

4.3.1 Contents of extended parameter

Extended parameter Items		Setting Range
Software upper limit		㎜ : -2147483648 ~ 2147483647 [X10-4 ㎜] Inch : -2147483648 ~ 2147483647 [X10-5inch] degree : -2147483648 ~ 2147483647 [X10-5degree] pulse : -2147483648 ~ 2147483647 [pulse]
Software lower limit		
Infinite running repeat position		㎜ : 1 ~ 2147483647 [X10-4 ㎜] inch : 1 ~ 2147483647 [X10-5inch] degree : 1 ~ 2147483647 [X10-5degree] pulse : 1 ~ 2147483647 [pulse]
Backlash compensation amount		㎜ : 0 ~ 65,535 [X10-1 ㎛] inch : 0 ~ 65,535 [X10-5inch] degree : 0 ~ 65,535 [X10-5degree] pulse : 0 ~ 65,535 [pulse]
Position completion time		0 ~ 65,535 [unit: ms]
S-Curve ratio		1 ~ 100 [unit: %]
Arc insertion position in 2-axis linear interpolation continuous operation		mm: 0 ~ 2147483647[X10-4 ㎜] Inch: 0 ~ 2147483647[X10-5Inch] degree: 0 ~ 2147483647[X10-5degree] pulse: 0 ~ 2147483647[pulse]
Control word	Pulse output direction	0: CW, 1: CCW
	Acceleration/Deceleration pattern (bit 1)	0:Trapezoid operation, 1:S-Curve operation
	M Code mode (bit 2 ~ 3)	0:NONE, 1:WITH, 2:AFTER
	Software limit detect (bit 5)	0:Don't detect, 1: Detect
	Interpolation speed selection (bit 4)	0: main axis speed, 1: synthetic speed
	External VTP (bit6)	0: Disable, 1: Enable
	External stop selection (bit7)	0: Emergency stop, 1: Deceleration stop
	Module output signal selection (bit8)	0: Deviation counter clear 1: Setting position output
	Speed/Position switching coordinate (bit9)	0: Incremental, 1: Absolute
	Positioning complete condition (bit 10 ~ 11)	0 : Dwell time 1 : In-position 2 : Dwell time and in-position 3 : Dwell time or In-position
	Infinite running repeat (bit12)	0: Disable, 1: Enable
	Interpolation continuous operation Type (bit 13)	0 : Pass target position 1 : Pass near position
	Arc insertion in 2-axis linear interpolation continuous operation (bit 14)	0 : Don't insert 1 : Insert arc continuous operation
	Pos.-specified speed override coordinate (bit 15)	0: absolute, 1: incremental

4.3.2 Extended parameter setting

(1) Software upper/Lower Limit

(a) The function is designed so that the machine does not execute the positioning operation out of the range by setting the range of machine available to move through software upper limit and software lower limit. That is, this function is used to prevent any breakaway by incorrect operation position setting and incorrect operation by user program fault.

(b) External input upper/lower limit can be also set besides the software upper/lower limit.

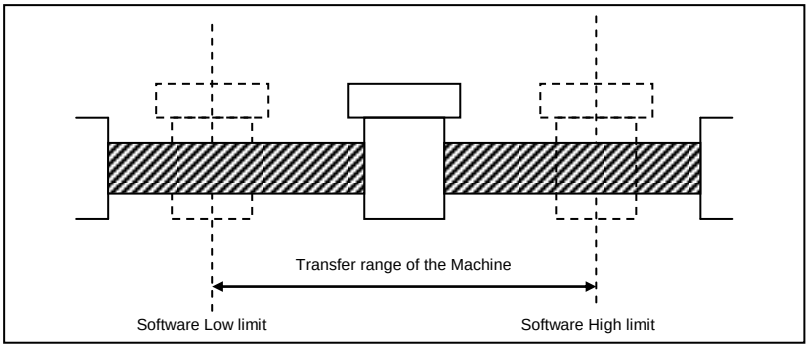

(c) The range check of software upper/lower limit shall be done at the start of operation and during operating.

(d) If the software upper/lower limit is detected, error (Software upper limit error: 501, Software lower limit error: 502) occurs and the pulse output of positioning module shall be disabled.

Therefore, when you want to operate again, it is required to reset error and release the 'output inhibition' before using.

(e) Setting range

Unit	Software upper/lower limit range
pulse	-2147483648～2147483647[pulse]
㎜	-2147483648～2147483647[X10^{-4} ㎜]
Inch	-2147483648～2147483647[X10^{-5}Inch]
degree	-2147483648～2147483647[X10^{-5}degree]

But Software upper limit value always should be higher than software lower limit, at least same.

(f) If the software upper/lower limit was set by default value (upper limit: 2,147,483,647, lower limit: -2,147,483,648) or same value, then it wouldn't detect upper/lower limit.

(2) Infinite running repeat position

(a) When using “Infinite running repeat” mode, it sets the repeated position value.

(b) This is applied when “Infinite running repeat” in the extended parameter is “1: Enable”. When this parameter setting value is “0: Disable”, command position and current position is expressed within position expression range according to value set in “Unit” of basic parameter.

(c) When “Infinite running repeat” parameter is “1: enable”, command position and current position is expressed as 0 ~ “infinite running repeat position-1”.

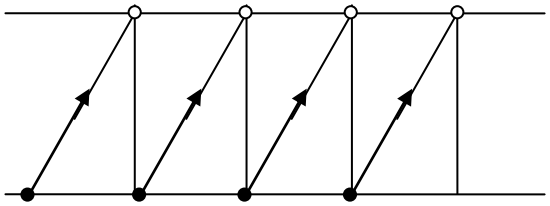

(d) Setting range

Unit	Infinite running repeat position range
pulse	1～2147483647[pulse]
㎜	1～2147483647[X10^{-4} ㎜]
Inch	1～2147483647[X10^{-5}Inch]
degree	1～2147483647[X10^{-5}degree]

(3) Infinite running repeat

(a) It sets whether to enable or disable “Infinite running repeat”

(b) When you set “Infinite running repeat” as “1: enable”, command position and current position refreshes within the range set in “Infinite running repeat position” periodically.

(c) When you don’t use “Infinite running repeat” function, set as “0: disable”.

(4) Backlash Compensation Amount

(a) In case that a gear, screw etc is combined to the motor axis, The tolerance that the machine does not work by the wear, when the rotation direction changes, is called as ‘Backlash”. Therefore, when you change the rotation direction, it is required to add the backlash compensation amount to the positioning amount for output.

(b) This is used for positioning operation, inching operation and jog operation

(c) Setting range.

Unit	Backlash setting range
pulse	0 ~ 65,535[pulse]
㎜	0 ~ 65,535[X10^{-4} ㎜]
Inch	0 ~ 65,535[X10^{-5}Inch]
degree	0 ~ 65,535[X10^{-5}degree]

(d) As presented in the following figure, if the position moved 1m to the right and again 1m to the left, it is not possible to reach the original position by backlash. At this time, it is required to add backlash compensation amount.

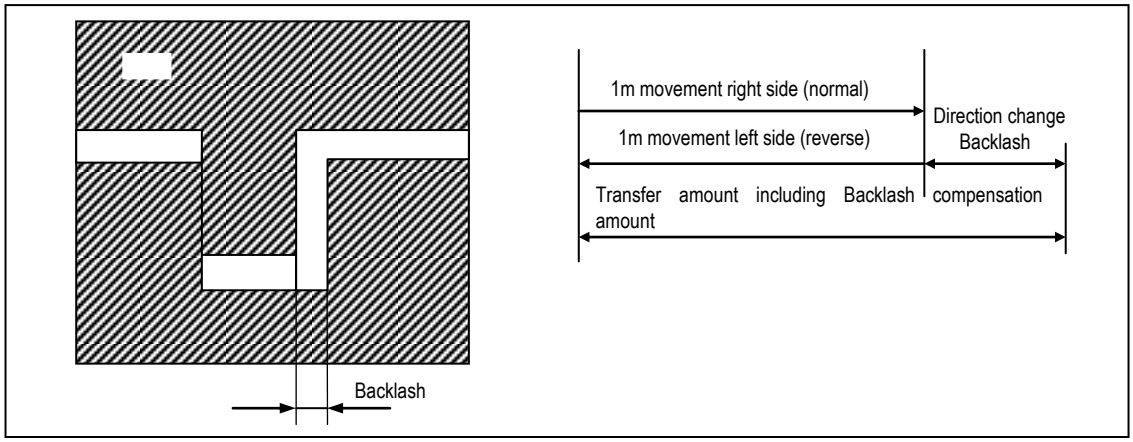

(e) It compensates by adding backlash compensation pulse to current output pulse within speed limit.

In case backlash compensation amount is bigger than Max. output Pulse (Speed limit x Control cycle) for one control cycle, distribute compensation amount to several control cycles

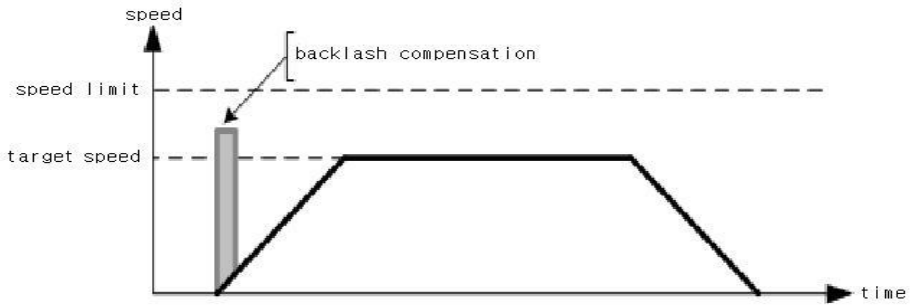

A,B,C,D : Relative position
P0 ,P1,P2,P3 : transfer amount of load
Numbers in ( ), { } mean rotation amount of motor

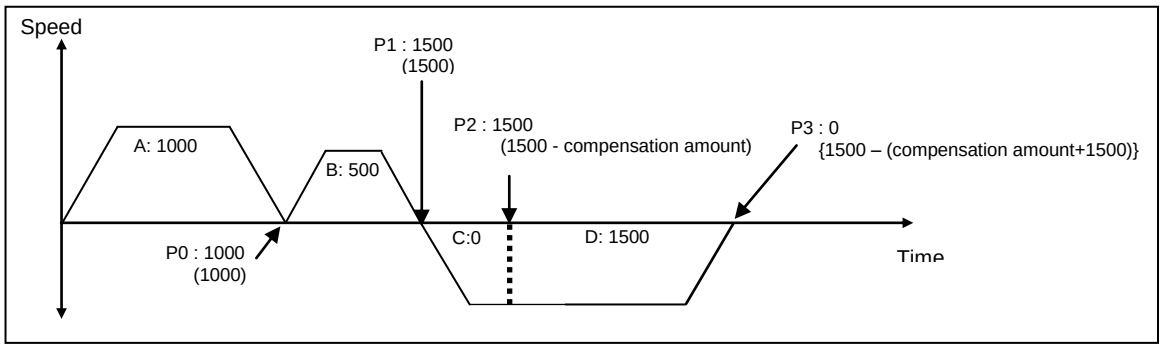

Notes

In case of backlash compensation is bigger than Max. Pulse (Speed limit x Control cycle) for one control cycle, progress is as shown below. For example, in case that Speed limit is 100000 and backlash is 250, backlash compensation is bigger than Max. output Pulse (100000pps x 0.001s = 100) for one control cycle, and performed for several control cycles. In this case, the number of output pulse which comes from positioning module per one control cycle is different according to Acc. time. Compensation pulse is added to above pulse for total pulse output to be smaller than Max. output pulse for one control cycle. So the number of control cycle compensation acts is different.

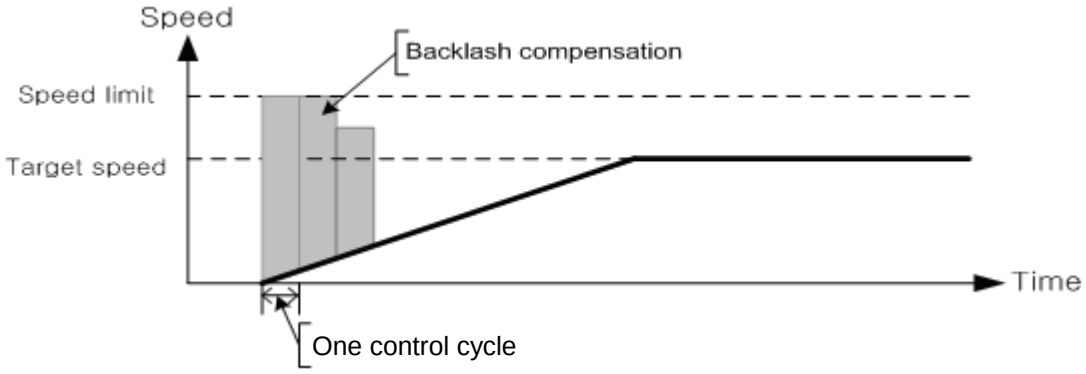

(5) Positioning Completion Time

(a) Positioning completion signal shall be OFF after sustaining “ON” for Positioning Completion Time after positioning is completed and positioning completion signal becomes “ON” in single operation, repeat operation, keep operation, continuous operation, linear interpolation operation, circular interpolation operation, speed/position switching control operation, inching operation

At this time, if all start command is executed while positioning completion signal is ON, completion signal shall be OFF immediately. In case of keep operation and continuous mode operation, positioning completion signal will be on after all steps end.

(b) The setting range is 0 ~ 65,535 (unit: 1 ㎳).

(c) The action of single operation mode is as follows:

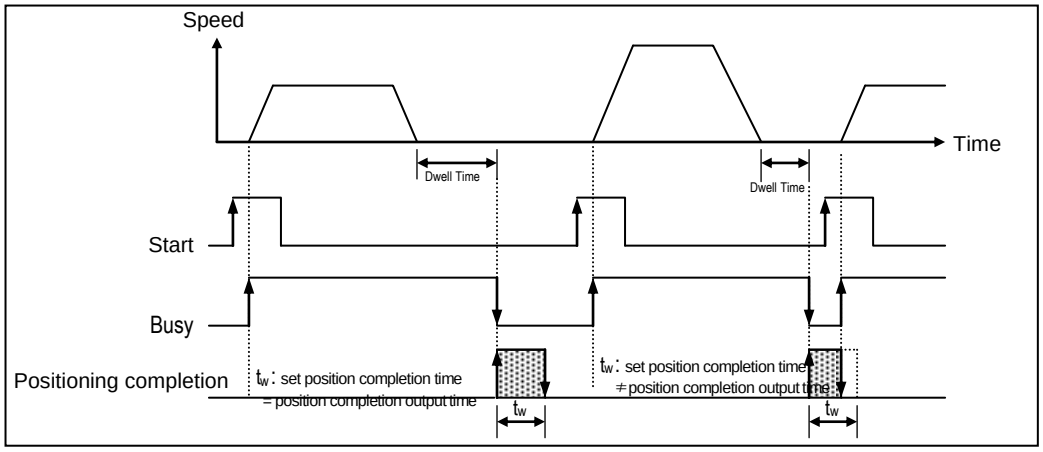

(d) The action of Keep operation mode is as follows :

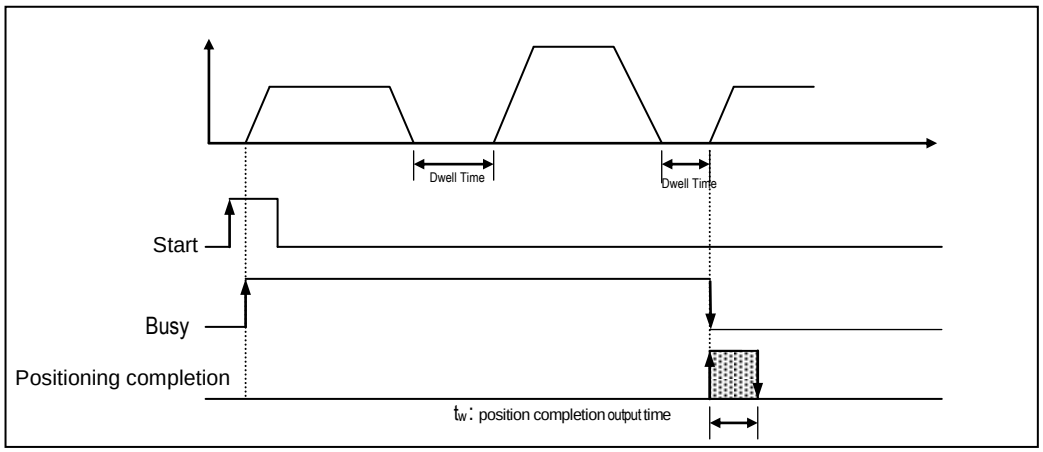

(e) The action of Continuous operation mode is as follows.

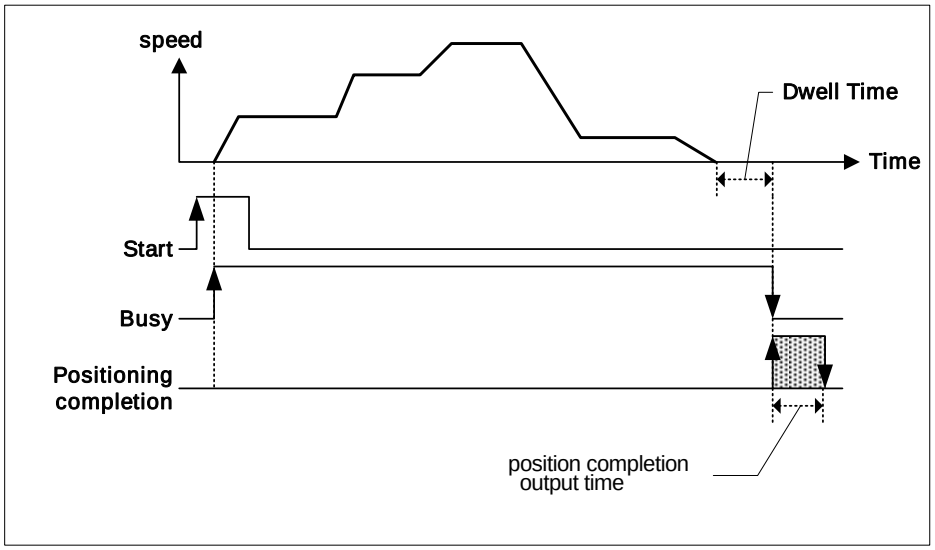

(6) Pulse output direction

(a) This is used to set machine's actual movement direction according to pulse output direction (rotation direction of motor) of positioning module.

(b) If pulse output direction is set as "CW" and machine moves forward direction in case of forward direction operation, it is set correctly.

(c) If pulse output direction is set as "CW" and machine moves reverse direction in case of forward direction operation, it is not set correctly. Set the pulse output direction as "CCW". In case of forward direction operation, if machine moves forward direction, it is set correctly.

(d) In the following figure, pulse output level is set as Low Active"

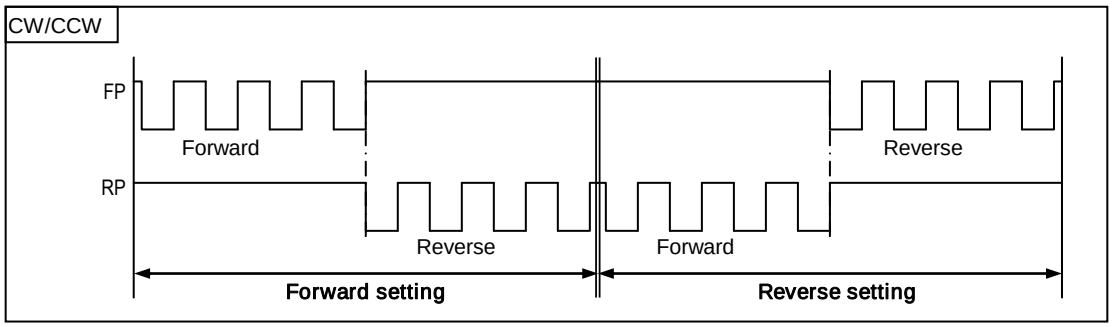

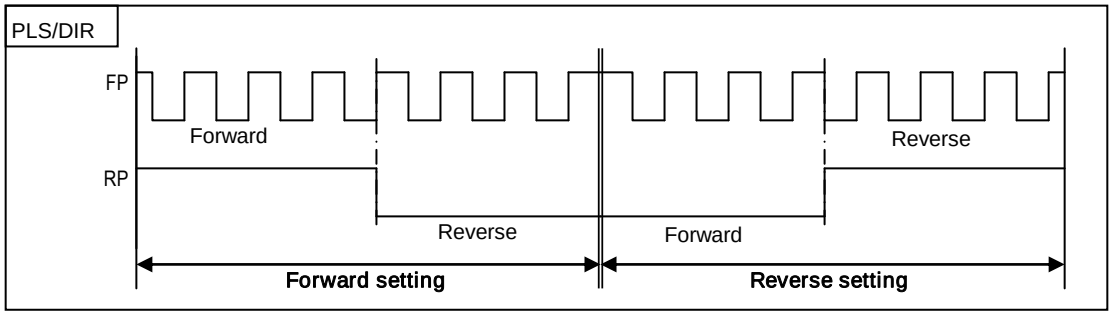

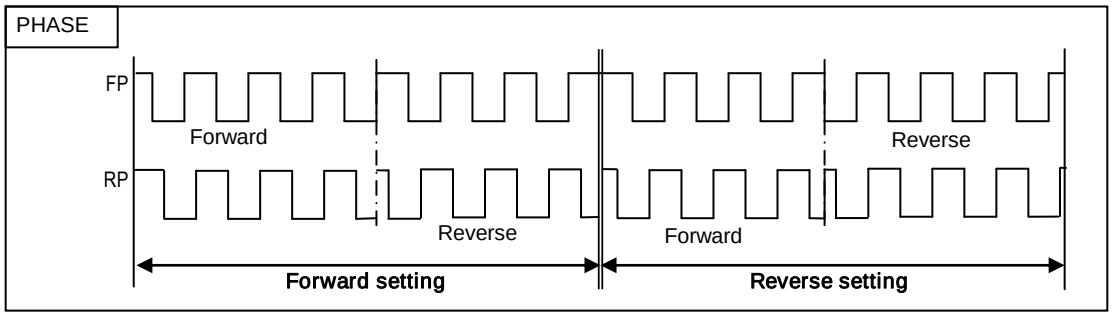

(7) M Code Output

(a) M code mode set by parameter shall be applied to all position data of the corresponding axis.

(b) Available to set M code number differently at each operation step no. of positioning data.

(c) M code number setting range : 1 ~ 65,535

(d) Available to read and use M code for the identification of operation step no. in operation and the execution of auxiliary works (Clamp, Drill rotation, tool change etc).

(e) M code signal occurring during the operation shall be reset by M code "Off" command.

Notes

If you execute the next step after the positioning is completed and M code signal is "ON", the next operation step no. does not work and the error (E233) will occur. Therefore, in order to execute the positioning of the next operation step number, M code signal should be "OFF" by M code "Off" command

(f) There are two kinds of M code mode according to the output timing of M code signal: With mode and After mode.
(In case of setting NONE, There is no M code signal, even if M code No was set.)

1) With mode

It turns on the M code signal and outputs M code number with start of positioning [Indirect start, direct start and simultaneous start].

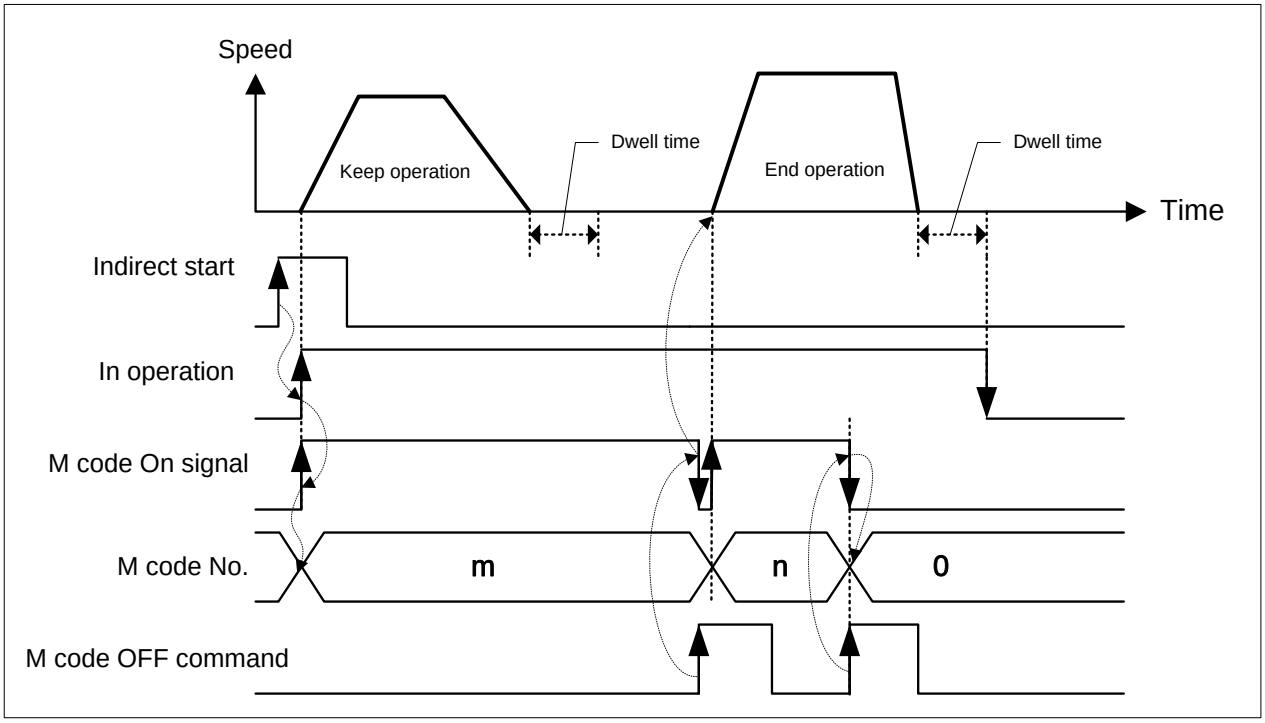

2) After mode

It turns on the M code signal and outputs M code number after completion of positioning [indirect start, direct start and simultaneous start].

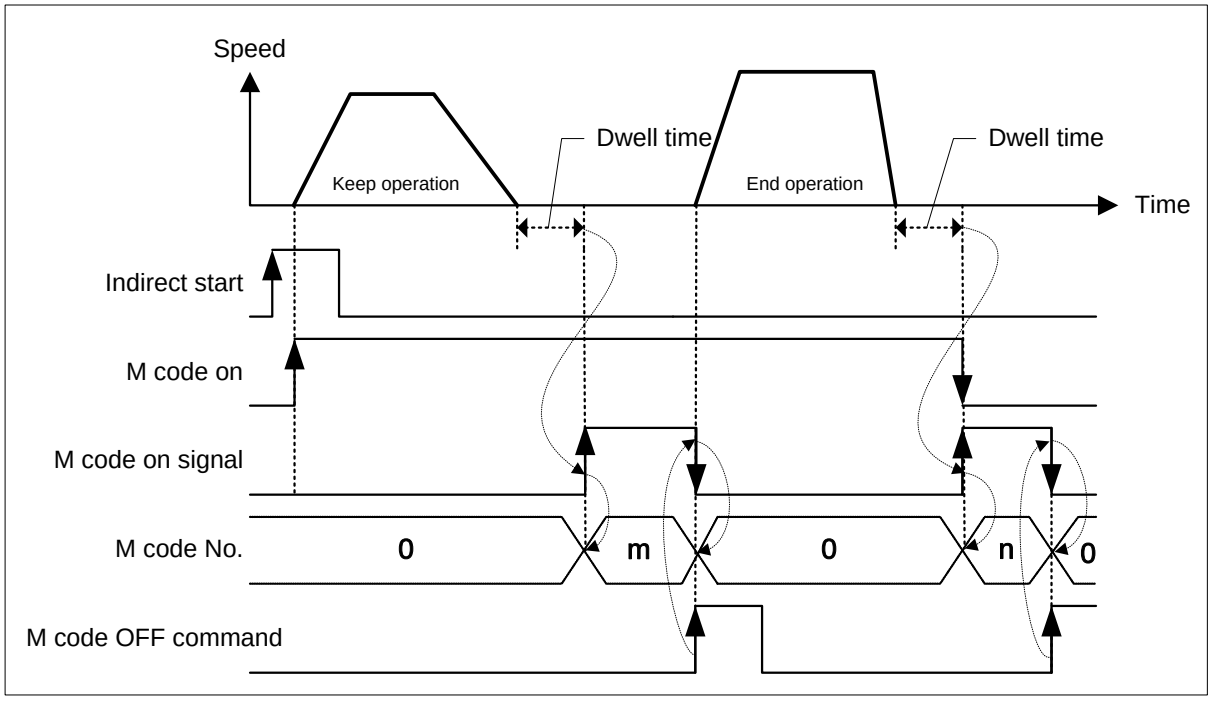

(8) Interpolation speed selection

It selects whether to consider the operation speed of the position data as main axis speed or synthetic speed. For detailed comparison, refer to the example calculating interpolation speed in Ch9.2.6 and Ch9.2.7.

(9) Enable/disable external VTP

(a) In case of using external speed/position control switching, “External VTP” should be set as “enable”.

(b) In case that it is set as “disable”, external speed / position control switching signal doesn’t work.

(10) External stop selection

(a) Selects external stop type between EMG. stop and Dec. stop

(11) Software limit detect

(a) Selects whether to stop the operation or not when detecting software limit.

(b) If the software upper/lower limit is set as default value (upper limit: 2,147,483,647, lower limit: -2,147,483,648) or same value, it wouldn’t detect software upper/lower limit.

(12) Acceleration/Deceleration Pattern

(a) There are 2 kinds of Acceleration/Deceleration operation pattern: Trapezoid operation and S-Curve operation.

(b) In case of positioning operation, it is available to select operation pattern (either trapezoid operation or S-Curve operation) at the section of acceleration and de deceleration.

(c) As it is not possible to use S-Curve operation pattern in case of continuous operation mode and speed override, care should be taken in setting.

(d) In case of using S-Curve acceleration/deceleration, it is available to protect the motor from the load effect at the point that the motor starts to move the moving object and stops it.

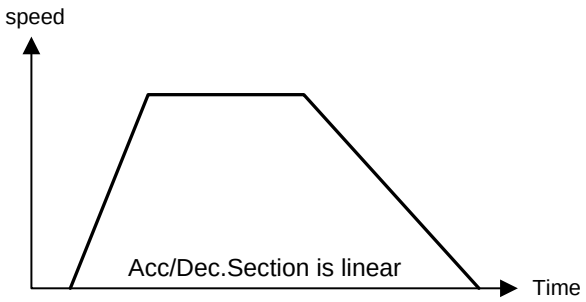

<Trapezoid Acceleration/Deceleration>

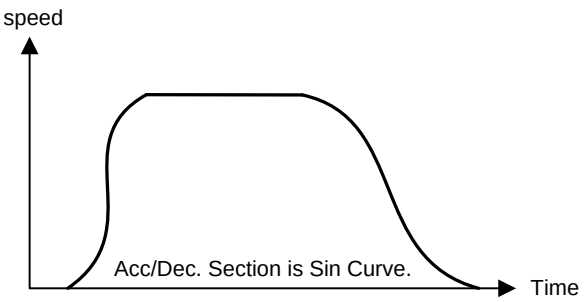

<S-Curve Acceleration/Deceleration>

(13) S-curve rate

(a) In case of selecting S-Curve operation as an acceleration/deceleration pattern, S-Curve rate (1~100%) should be set.

(b) According to S-Curve rate, S-Curve operation pattern shall be formed in accordance with sine curve.

(c) If S-Curve rate is 1%, it becomes the same as trapezoid operation and if the 100% rate is set, it becomes the acceleration/deceleration curve which is the closest to the Sin Curve.

(d) The figure as below shows the example of S-Curve rate setting

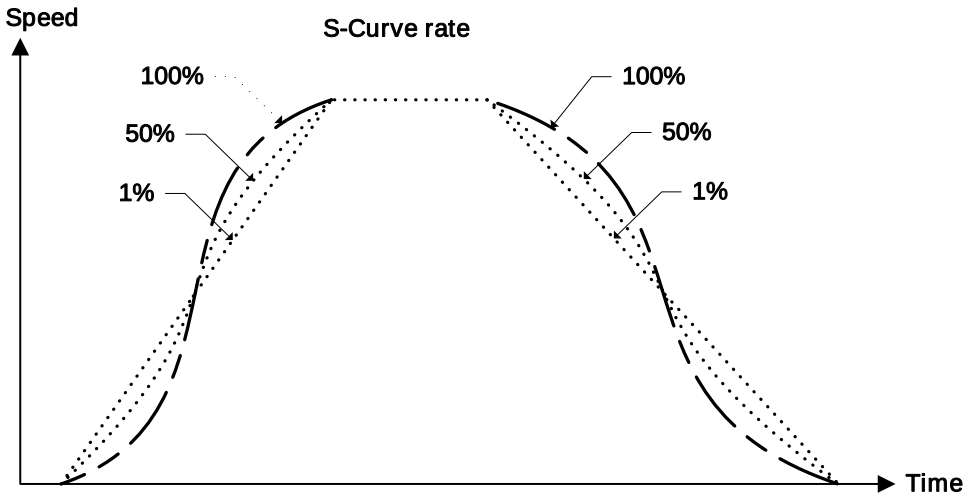

(14) Positioning Complete Condition

(a) Positioning Complete signal notify that operation has been completed without stop factor

(b) There are 4 kinds of methods for positioning complete condition.

1) by dwell time

2) by in-position signal

3) by using both dwell time and in-position signal

4) by using either dwell time or in-position signal.

(c) Though target reaches goal position and positioning is complete, “in operation” status is kept until positioning complete condition is met. If positioning complete condition is met, “in operation” signal will be off and it goes to “Positioning complete” status.

(d) The following is timing diagram for each method.

1) Method by dwell time

If it reaches goal and stops, positioning complete signal will be on after Dwell time

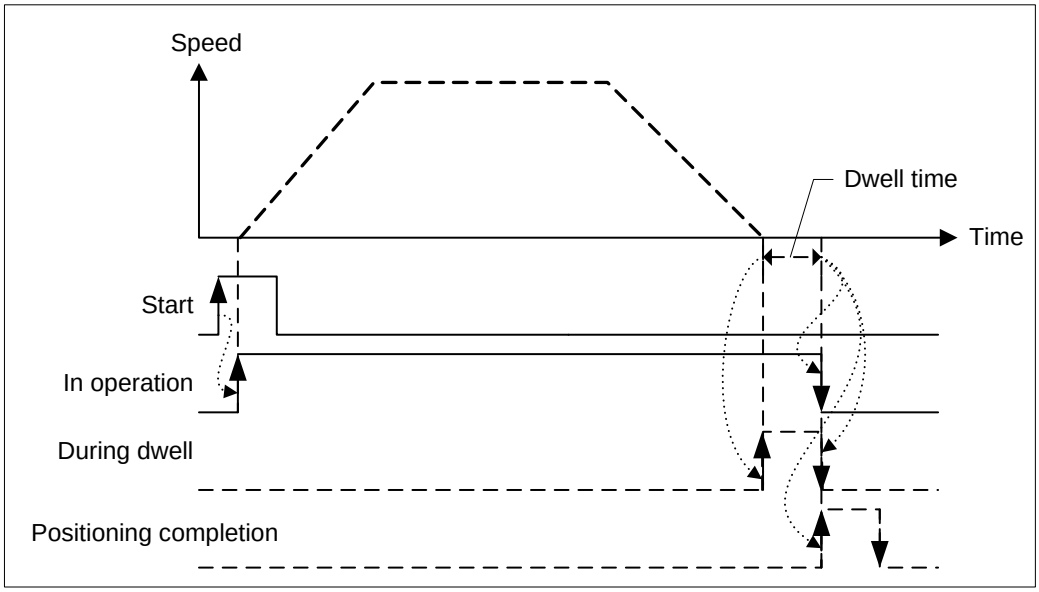

2) Method by in-position signal

a) In case that in-position signal becomes ON before positioning is completed

Positioning complete signal will be on when reaching goal and positioning is completed

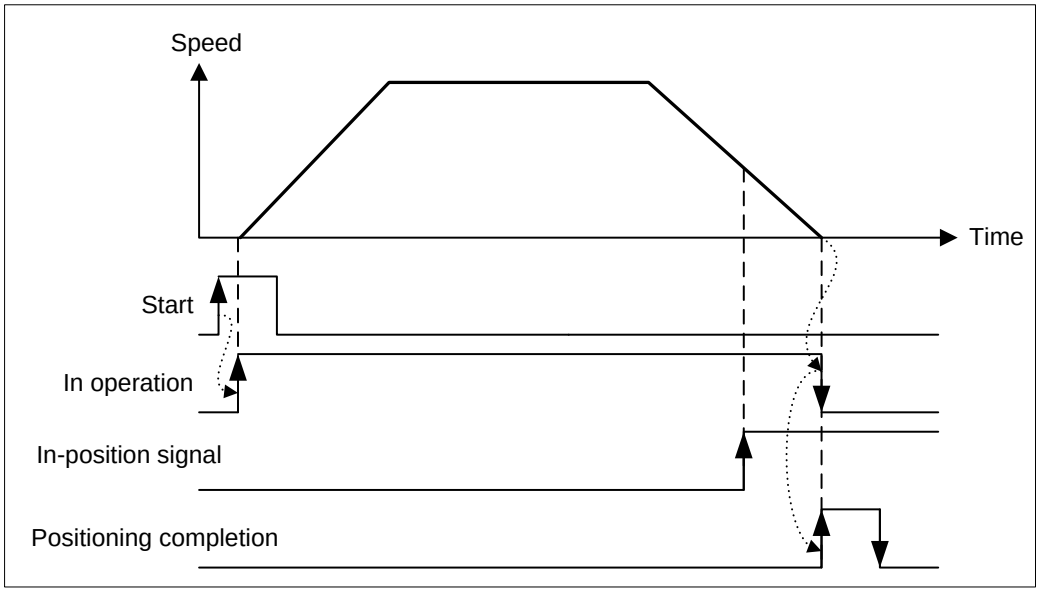

b) In case In-positioning signal becomes on after positioning is completed.

After reaching goal and positioning is completed, wait until In-position signal becomes on. When In-position signal becomes on, positioning complete signal will be on.

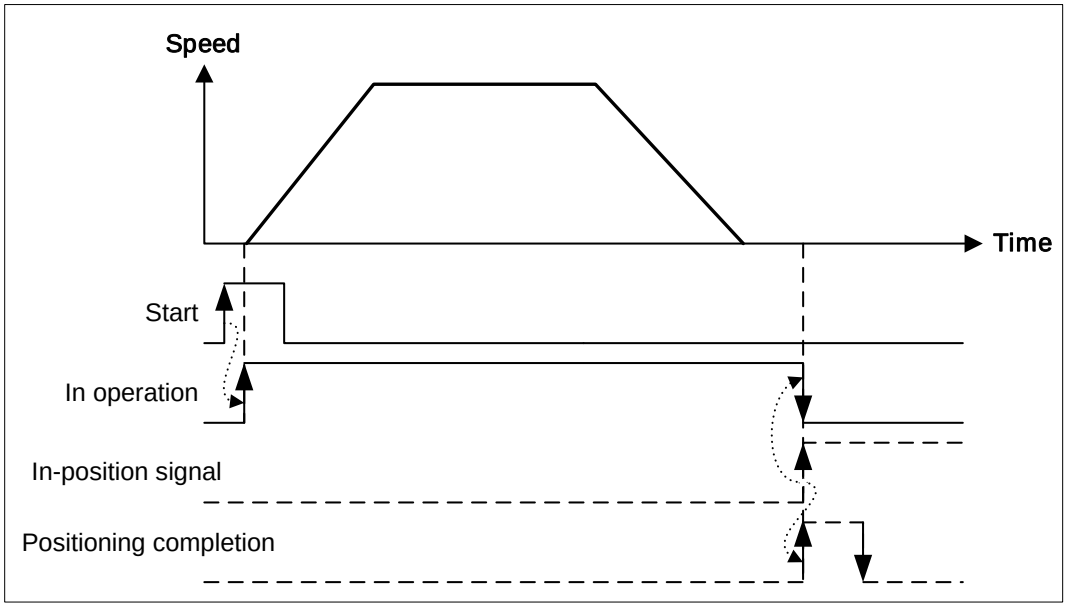

3) Method by using both dwell time and in-position signal

a) In case that in-position signal occurs before dwell time is ended

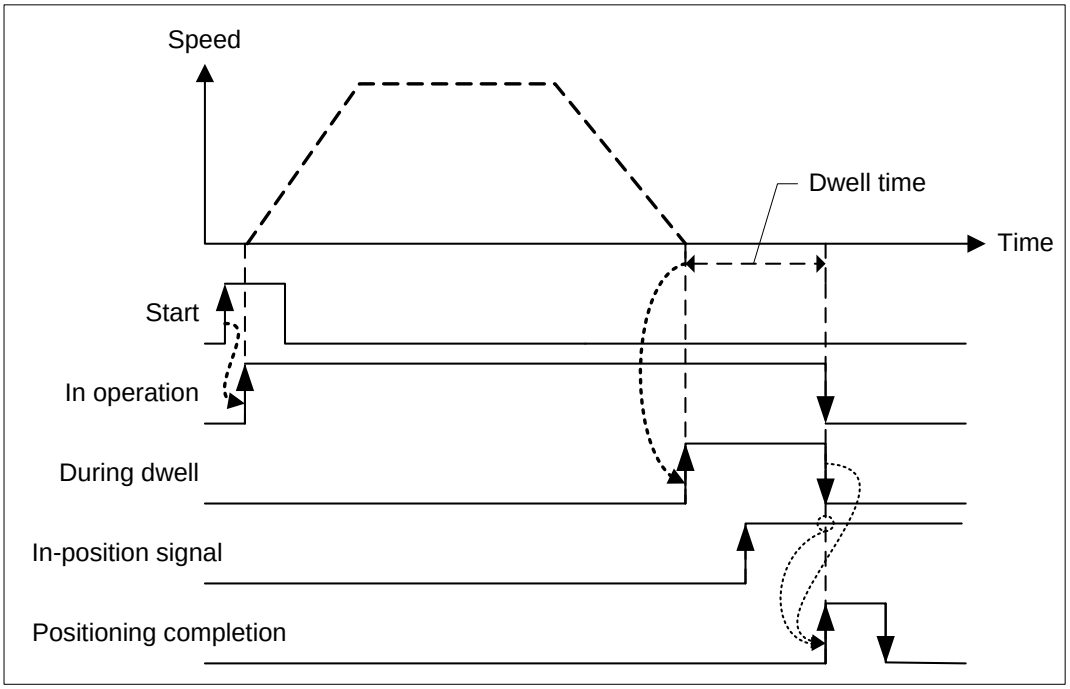

b) In case that in-position signal occurs after dwell time is ended.

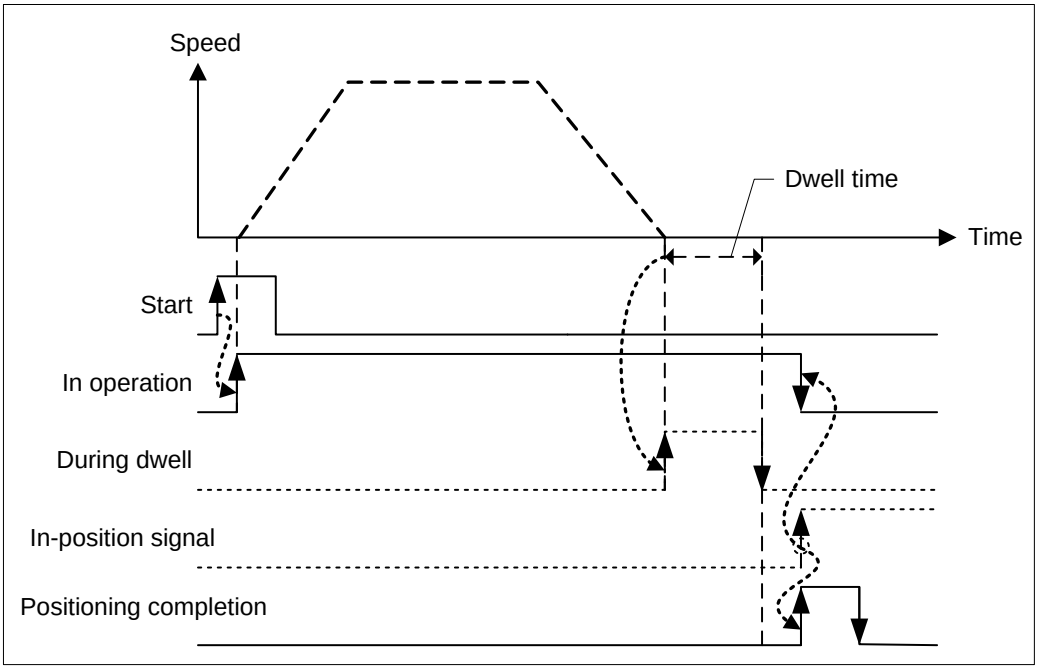

c) In case that in-position signal occurs during pulse output

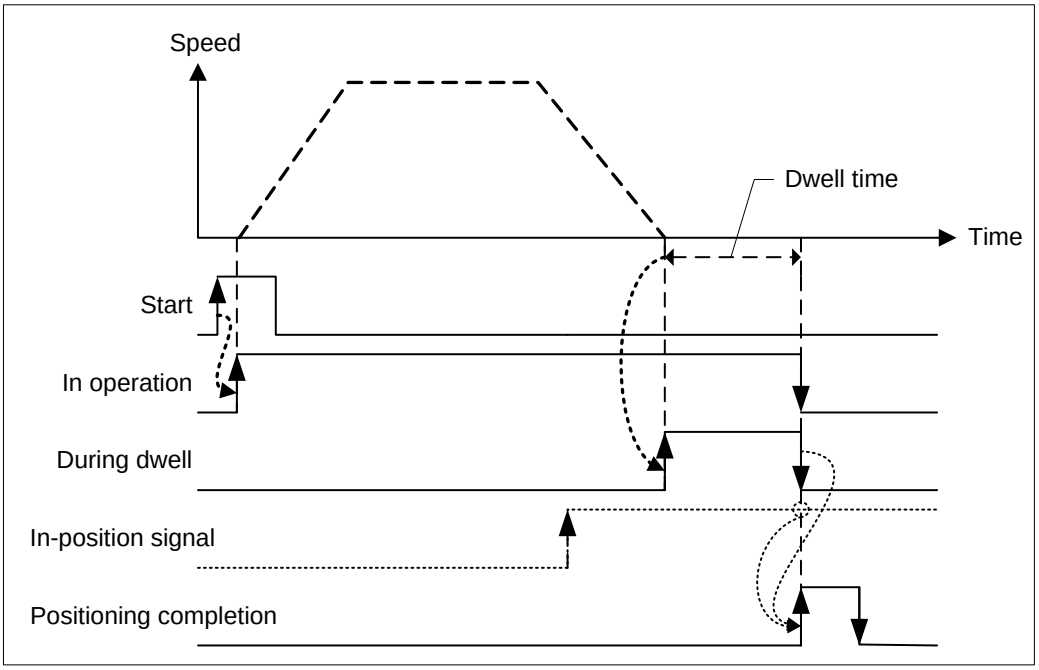

4) Method by using either dwell time or in-position signal

a) In case that in-position signal occurs before dwell time is ended

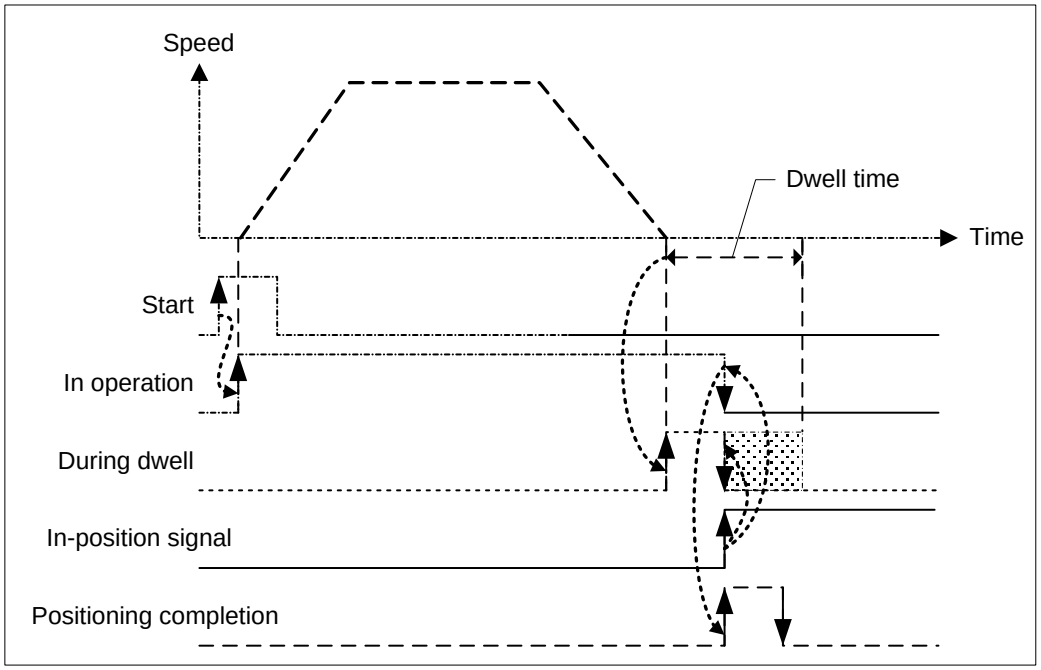

b) In case that in-position signal occurs after dwell time is ended.

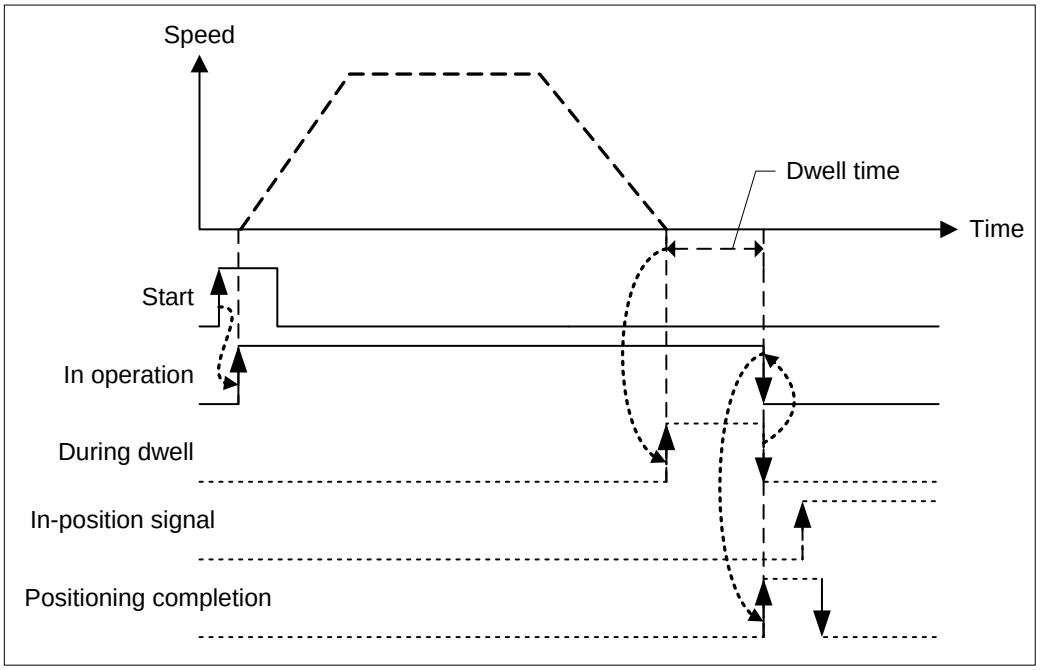

(15) Linear interpolation positioning method

In case control method is linear interpolation or circular interpolation and operation method is continuous operation, positioning control will be different in accordance with the value set in “Int continuous opr. Type”.

The two method types of interpolation control continuous operation are as follows;

- Pass target position (Passes designated target position)
- Pass near position (Before reaching target position of current step, moves to target position of next step)

Set of the Interpolation continuous operation positioning method is as follows;

Items	Setting value	Description
Interpolation continuous operation method	0 : Pass target position	In case of continuous operation from current step to next step, it passes target position of current step
	1 : Pass near position	In case of continuous operation from current step to next step, it passes near target position of current step

For further information, please refer to operation mode (4) continuous operation of 9.2.2 positioning control.

(16) Arc insertion during 2-axis linear interpolation continuous operation

When executing linear interpolation, determine whether to add arc during 2-axis linear interpolation continuous operation.

Here describes Arc insertion during 2-axis linear interpolation continuous operation

Setting item	Setting Value	Content
Arc insertion during 2-axis linear interpolation continuous operation	0 : Don’t insert	When executing 2-axis linear continuous interpolation, doesn’t inserts arc.
	1 : insert arc	When executing 2-axis linear continuous interpolation, inserts arc.

For further information about Arc insertion during 2-axis linear interpolation continuous operation, please refer to (4) 2-axis linear interpolation continuous operation arc insertion of 2-axis linear interpolating control of 9.2.6.

(17) Arc insertion position

When 「Arc insertion」 was set as “insert arc”, confirm the position where it was set by ‘inputting circular arc continuous operation’, reset start position of circular interpolation(Goal position of linear path 1) and goal position (Start position of linear path 2).

This is the setting of ‘position of inputting circular arc from axis 2 linear interpolation continuous operation’.

Setting item	Setting value	Content
Position of inputting circular arc from axis 2 linear interpolation continuous operation	0 ~ 2147483647	Set the position that circular will be inputted. It is relative distance from goal position.

For further information about inputting circular arc from axis 2 linear interpolation continuous operation, please refer to (4) inputting circular arc from axis 2 linear interpolation continuous operation of control linear interpolation (9.2.6).

(18) Position-specified speed override coordinate

Position-specified speed override command is the command changing the operation speed when the object reaches the specified position. At this time, operation may be different according to the type of position value. Position value can be absolute position value or incremental position value.

This is the setting of ‘Position-specified speed override coordinate’.

Item	Setting value	Content
Position-specified speed override coordinate	0 : ABS	Speed changes at the specified absolute position.
	1 : INC	Speed changes at the position as far as the set value from start position.

For further information, refer to 9.5.6 position-specified speed override.

(19) Speed/Position switching coordinate

If “Speed/Position switching signal” is inputted during speed control, speed control changes into position control and executes position control with the value set in target position. At this time, this sets whether to consider the target position as absolute position value or incremental position value.

This is the setting of “Speed/Position switching coordinate”.

Item	Setting value	Content
Speed/position switching coordinate	0 : INC	Executes positioning as far as the set value from position where speed/position switching command is executed.
	1 : ABS	Considers the set value as absolute position and executes positioning into the set absolute position.

For further information, refer to 9.2.14 speed/position switching control.

(20) Module output signal selection

Set whether to use the module output signal as “Deviation counter clear” or “Setting position signal output”

Item	Setting value	Content
Module output signal selection	0 : Deviation counter clear	Use as "Deviation counter clear" signal after complete homing.
	1 : Setting position output	Module output signal is used as “Setting position output” signal.

4.4 Manual Operation Parameter

▶ Here describes Manual operation parameter of positioning module.

▶ Manual operation parameter use in event that operation of JOG, Inching is used.

4.4.1 Manual Operation Parameter

Manual operating parameter item	Setting range
JOG high speed	㎜ : 1 ~ 2,147,483,647 [X10-2 ㎜/sec] Inch : 1 ~ 2,147,483,647 [X10-3Inch/sec] degree : 1 ~ 2,147,483,647 [X10-3 degree/sec] pulse : 1 ~ 2,147,483,647 [pulse/sec]
JOG low speed	
JOG acceleration speed (ms)	0 ~ 2,147,483,647 [ms]
JOG deceleration speed (ms)	
Inching Speed	㎜ : 1 ~ 65,535[X10^{-2}㎜/ min] Inch : 1 ~ 65,535[X10^{-3}Inch/ min] degree : 1 ~ 65,535[X10^{-3} degree/ min] pulse : 1 ~ 65,535[pulse/sec]

4.4.2 Manual Operation Parameter Setting

(1) JOG high Speed

(a) Jog speed is related to Jog operation (a kind of manual operation) and has 2 types of operation : Jog low speed operation and Jog high speed operation.

(b) For further information, please refer to 9.3.1 JOG Operation.

(c) JOG high speed operation has operation pattern as acceleration, constant speed, deceleration section. Therefore, acceleration section and deceleration section is controlled by JOG acceleration/deceleration time.

(d) Jog high speed setting range

All of control by Position module make within speed limit. Therefore , jog high speed also couldn't exceed the speed limit and must be larger than jog low speed.

(Notices when setting the high speed : Bias speed ≤ Jog low speed ≤ Jog high speed ≤ Speed limit)

(2) JOG Low Speed

(a) JOG low speed operation has operation pattern as acceleration, constant speed, deceleration section.

(b) JOG low speed setting range : Bias speed ~ Jog high speed

(3) JOG Acceleration/Deceleration Time

(a) This means JOG acceleration/deceleration time when Jog high speed and low speed operation.

(b) JOG acceleration/deceleration time setting range : 0 ~ 2,147,483,647 [ms]

In case of set by 0, operate set by acceleration time 1 and deceleration time of parameter.

(4) Inching Speed

(a) The speed necessary for inching operation is set here.

(b) Inching speed setting range : 1 ~ 65,535(unit: 1pps)

4.5 Homing Parameter

▶ Here is describes about homing parameter of positioning module.

▶ Homing parameter is needed when positioning module return to origin.

4.5.1 Homing Parameter

Homing Parameter option		Setting range
Origin address		㎜ : -2147483648 ~ 2147483647 [X10^{-4} ㎜] inch : -2147483648 ~ 2147483647 [X10^{-5}inch] degree : -2147483648 ~ 2147483647 [X10^{-5}degree] pulse : -2147483648 ~ 2147483647 [pulse]
Homing-high speed		㎜ : 1 ~ 2,147,483,647 [X10^{-2} ㎜/minute] Inch : 1 ~ 2,147,483,647 [X10^{-3}Inch/minute] degree : 1 ~ 2,147,483,647 [X10^{-3} degree/minute] pulse : 1 ~ 2,147,483,647 [pulse/second]
Homing-low speed		
Homing Acceleration time		0 ~ 2,147,483,647 [ms]
Homing deceleration time		
Homing dwell time		0 ~ 65,535[ms]
Origin compensation amount		㎜ : -2147483648 ~ 2147483647 [X10-3 ㎜] Inch : -2147483648 ~ 2147483647 [X10-5Inch] degree : -2147483648 ~ 2147483647 [X10-5degree] pulse : -2147483648 ~ 2147483647 [pulse]
Homing restart waiting time		0 ~ 65,535[ms]
Control word	Homing mode(bit 0 ~ 2)	0: Approximately Origin/Origin(Off), 1: Approximately Origin/Origin(On), 2: High/Low limit / Origin, 3:Approximately Origin, 4:High speed origin, 5:High/Low limit, 6:Origin
	Homing direction(bit 3)	0:forward direction, 1:reverse direction

4.5.2 Homing parameter setting

(1) Homing Method

(a) There are 7 kinds of Homing method.

Homing processing method	APM Software package indication
Origin detection after DOG OFF	0: DOG/origin(OFF)
Origin detection after deceleration when DOG ON	1: DOG/origin(ON)
Origin detection by the origin and High/low limit	2: High/low limit/origin
Origin detection by DOG	3: DOG
High speed homing	4: High speed origin
Origin detection by high/low limit	5: High/low limit
Origin detection by HOME	6: HOME

▶ For further information of homing processing method, please refer to 9.1 homing of chapter 9

(2) Homing direction

(a) There are 2 kinds of homing direction, forward direction and reverse direction.

(b) In case of homing command was set by forward, begin to homing operation to currently increasing direction of position, searching needed signal for homing from external.

(c) In case of homing command was set by reverse, begin to homing operation to currently decreasing direction of position, searching needed signal for homing from external.

(3) Origin Address

(a) When homing is completed by homing command, the value set by homing address shall be used to change the present address value.

(b) Setting range of homing address: -2,147,483,648 ~ 2,147,483,647(unit: pulse)

(4) Origin compensation amount

(a) If the machine origin is deviated slightly – the difference between the setting value and the actual transfer amount caused by the mechanical tolerance - at the origin detection (Z phase input), this is used to compensate the tolerance.

(b) If origin compensation amount is already set, when you carry out the homing command, if you detect the origin and set (+) as much as data amount set as origin compensation amount, it move to the homing direction and if you set (-), it moves to the opposite of homing direction and then complete the homing action.

(c) Origin compensation amount setting range : -2,147,483,648 ~ 2,147,483,647 (unit: pulse)

(d) This picture is one of the examples about homing method that was applied by homing compensation amount from "Origin detection after approximate origin OFF".

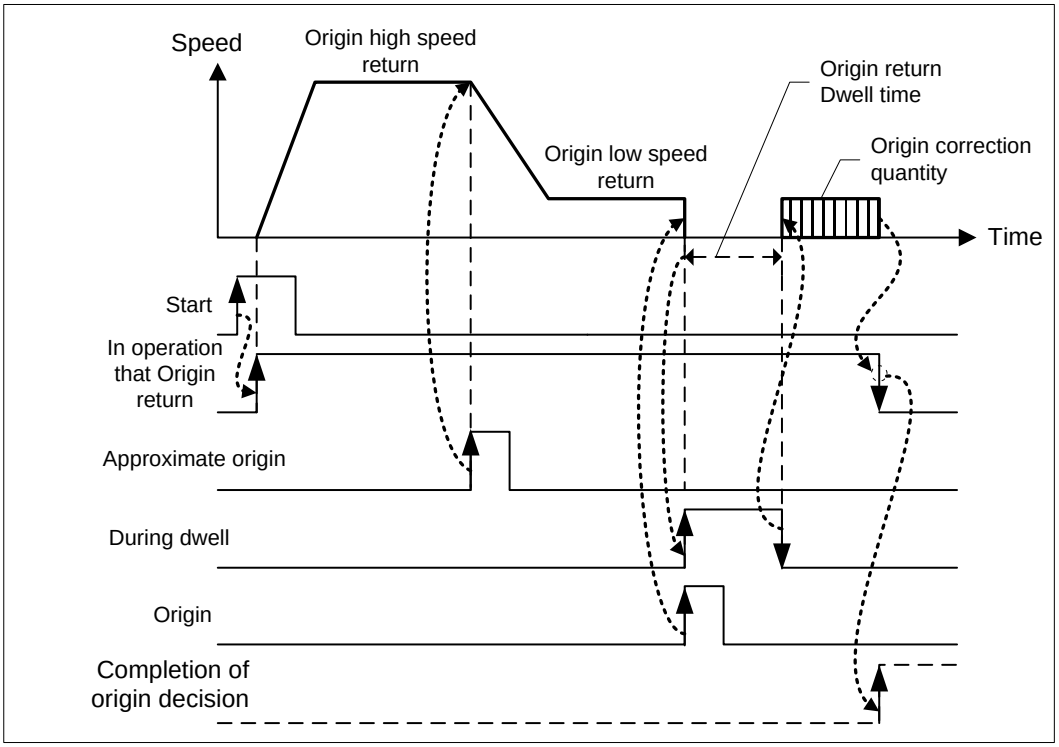

(5) Homing-High speed

(a) The speed when returning to the origin by homing command : high speed and low speed.

(b) There are two homing action ; 'detecting the origin signal'& 'detecting origin signal area'.

'Detecting the origin signal'; when detect the origin signal, be stop. If it has high speed, can be occurred errors between the origin signal and stop spot of machine. And should be operated under the steady speed.

Then, the speed is homing low speed.

Homing action can complete by higher operation speed in detecting origin position. This is the speed that it is set by homing high speed.

(c) All of the control by positioning module doing work within speed limit. And Homing high speed also can't exceed speed limit. And, Homing high speed is faster than homing low speed or at least same.

Bias speed ≤ Homing-low speed ≤ Homing-high speed ≤ Speed limit

(6) Homing-Low speed

(a) The speed that acts to the constant speed section from high speed section via deceleration section by homing command.

(b) In case of detecting Homing signal, use this function.

Notes

When setting the homing speed, it is recommended to set the homing-low speed as low speed as possible. If setting the low speed as “too fast”, it may cause the incorrect origin signal detection.

(7) Homing reset time

(a) It is the waiting time until reset return in case of automatic homing reset by reach to signal of external inputting high/low limit

(b) Motor do not move while it was set by reset time.

(8) Homing accelerating speed/ deceleration speed

(a) When it returns by homing command, it will be accelerate or decelerate by settled acceleration time and deceleration time.

(b) Setting range is 0 ~ 2,147,483,647 [ms]. It will be accelerate or decelerate according to settled acceleration/deceleration time ‘1’ of basic parameter (if it was set by ‘0’ when return).

(9) Homing dwell time

(a) This is the time needed to maintain the precise stop accuracy of SERVO motor when using the SERVO motor for positioning.

(b) Practically, Dwell time is the time needed to remove the residual pulse of deviation counter after completion of positioning and especially Dwell time when returning to the origin is called as “homing dwell time”.

(c) Setting range of Homing dwell time : 0 ~ 65,535(unit: 1 ㎳)

4.6 I/O Signal Parameter

▶ Here describes using input/output signal parameter in positioning module.

▶ Input/output signal parameter use to decide act level of input signal.

4.6.1 I/O Signal Parameter

Input/output signal parameter configuration	Setting range
High limit signal	0 : A contact 1 : B contact
Low limit signal	
DOG signal	
Origin signal	
Emergency stop signal	
Speed/Position switching signal	
Driver ready signal	
In position signal	
Deviation count clear / Setting position output	

4.6.2 Setting Range of I/O Signal Parameter

In case of setting the input signal by A contact, it acts when external is ON and in case of setting by B contact, it acts when external signal is OFF.

(1) If setting the high limit signal of input signal parameter by A contact and the low limit signal by B contact, the high limit is detected when external high limit signal is ON while the low limit is detected when external low signal is OFF.

(2) If selecting Driver Ready from Driver Ready/In-position of extended parameter, the external input signal is used by Driver Ready signal. And if setting Driver Ready/In-position signal of input signal parameter by A contact, the positioning module operates normally when external driver ready is ON. On the contrary, if setting Driver Ready/ In-position signal of input signal parameter by B contact, the positioning module operates normally when external driver ready is OFF.

(3) If setting the origin signal of input signal parameter by A contact, the origin is detected when external origin signal is ‘Rising edge’, while if setting by B contact, the origin is detected when external origin signal is ‘Falling edge’.

4.7 Common Parameter

▶ Here describes common parameter of positioning module.

▶ The parameter which was related with positioning module is applied to all of the parameter.

4.7.1 Common parameter

Configuration of Common Parameter		Setting range
Control word	Pulse output level	0: Low Active, 1: High Active
	Encoder pulse input mode.	0:CW/CCW 1 multiplier 1:PULSE/DIR 1 multiplier 2:PULSE/DIR 2 multiplier 3:PHASE A/B 1 multiplier 4:PHASE A/B 2 multiplier 5:PHASE A/B 4 multiplier
	Speed override	0 : % designate, 1 : Speed designate
Encoder 0 Max. value		-2147483648 ~ 2147283647
encoder 0 Min. value		
encoder 1 Max. value		
encoder 1 Min. value		

4.7.2 Common Parameter Setting

(1) Encoder pulse input mode

(a) If you want to use by signal of a hand pulse generator or Servo drive encoder, can select suitable signal of a hand pulse generator or Servo drive encoder for using.

(b) Should select and set one from among CW/CCW 1 multiplier, PULSE/DIR 1 multiplier, PULSE/DIR 2 multiplier, PHASE A/B 1 multiplier, PHASE A/B 2 multiplier and PHASE A/B 4 multiplier as a encoder input signal.

1) CW/CCW 1 multiplier

When the Phase A input pulse was grow, or the phase B input pulse was grow, act to count.

It act to additional work when the Phase B input pulse is 'Low' and the Phase A input pulse is increased. It act to cutback when the Phase A is 'Low' and the Phase B input pulse is grow.

Additional/Cutback	Phase A input pulse High	Phase A input pulse Low
Phase B input pulse High	-	Cutback count
Phase B input pulse Low	Additional count	-

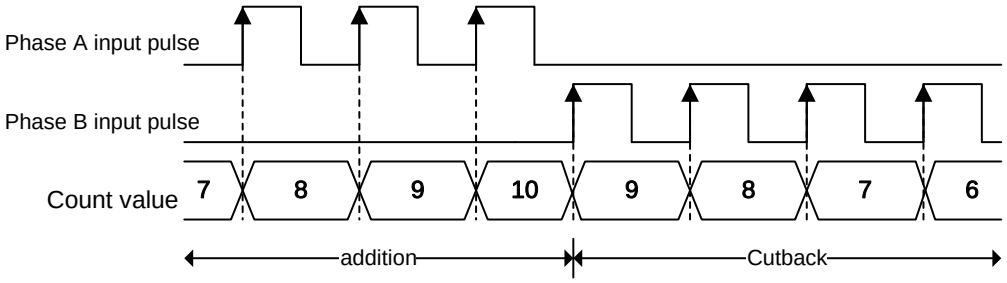

2) PULSE/DIR 1 multiplier

In case of increasing Phase A input pulse, act to count. Addition/cutback was decided by Phase B.

Additional/Cutback	Increasing Phase A input pulse	Decreasing Phase A input pulse
Phase B input pulse Off	Additional count	-
Phase B input pulse On	Cutback count	-

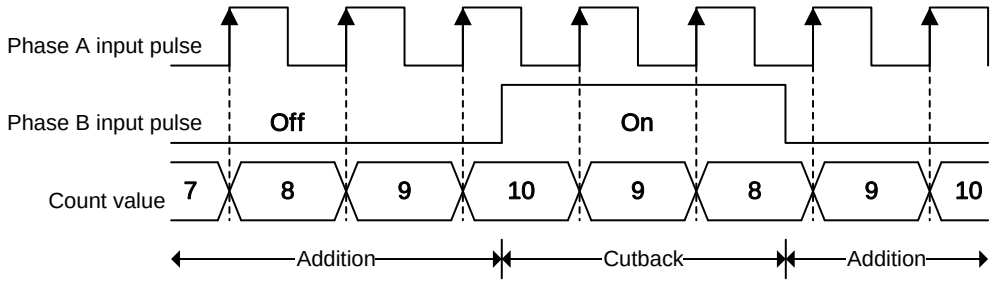

3) PULSE/DIR 2 multiplier

In case of increasing and decreasing Phase A input pulse, act to count. Addition/cutback was decided by Phase B.

Additional/Cutback	Increasing Phase A input pulse	Decreasing Phase A input pulse
Phase B input pulse Off	Additional count	Additional count
Phase B input pulse On	Cutback count	Cutback count

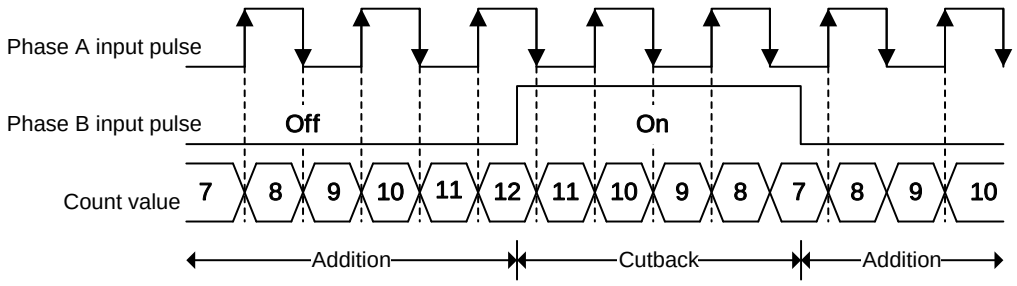

4) PHASE A/B 1 multiplier

In case of Phase A input pulse in advance of Phase B input pulse, Act to add when that Phase A increase pulse. In case of Phase B input pulse in advance of Phase A input pulse, Act to cutback when that Phase A decrease pulse.

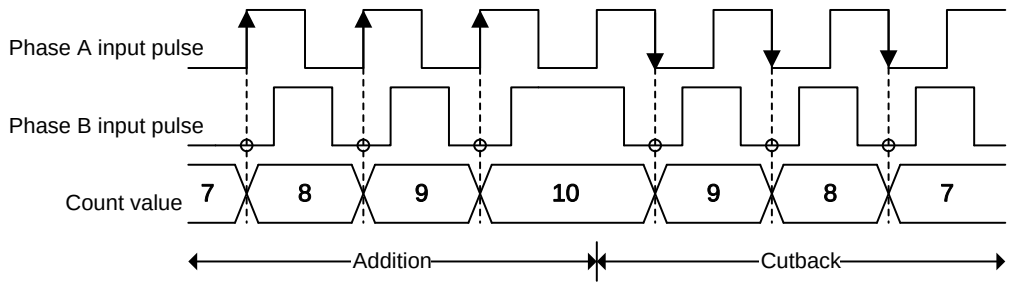

5) PHASE A/B 2 multiplier

Act to count when the Phase A increase/decrease. When Phase A input faster than Phase B at the Phase, act to decrease.

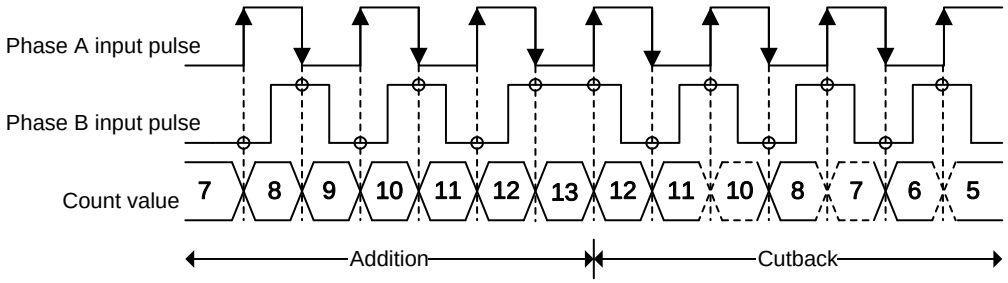

6) PHASE A/B 4 multiplier

Act to count when Phase A input pulse and Phase B input pulse is increased/decreased. In case that Phase A input faster than Phase B at the phase, act to add. In case that Phase B input faster than Phase A at the phase, act to decrease.

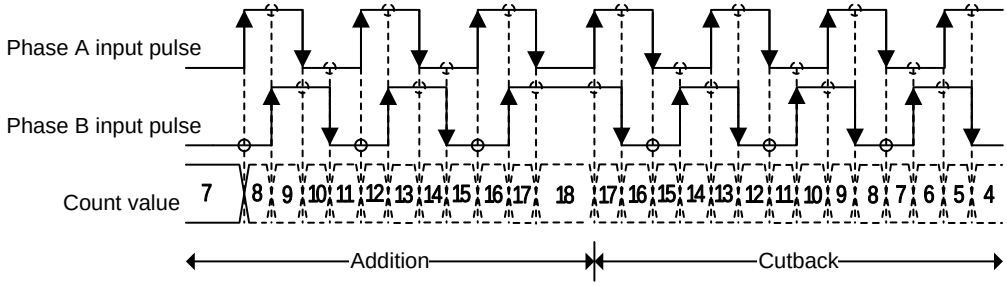

(c) The principal axis set encoder for that acting motor synchronization with manual pulse generator (MPG).

Synchronization rate can take “Encoder ≤ Motor” or “Encoder ≥ Motor” what you want.

(2) Max/Min value of encoder

(a) When count Inputted pulse (from a hand pulse generator or encoder signal of Servo drive) and display as encoder value, the count range and range of encoder value need to be set to Max/Min value of encoder,

(b) The act follows the picture of below.

1) When encoder value increase

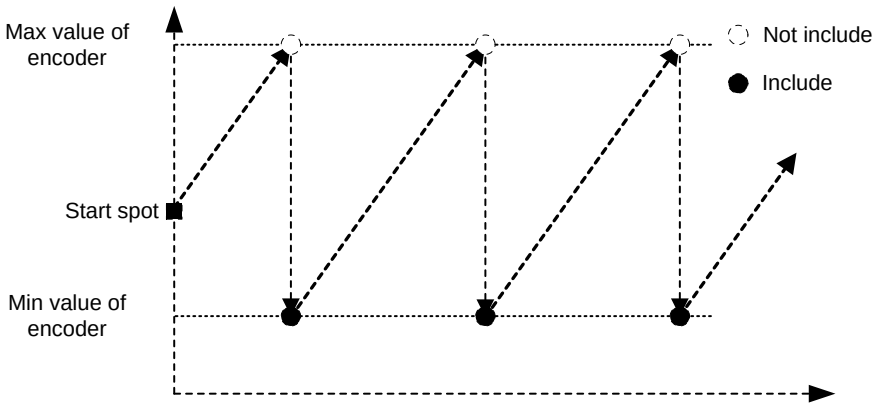

2) In case of decreasing encoder value

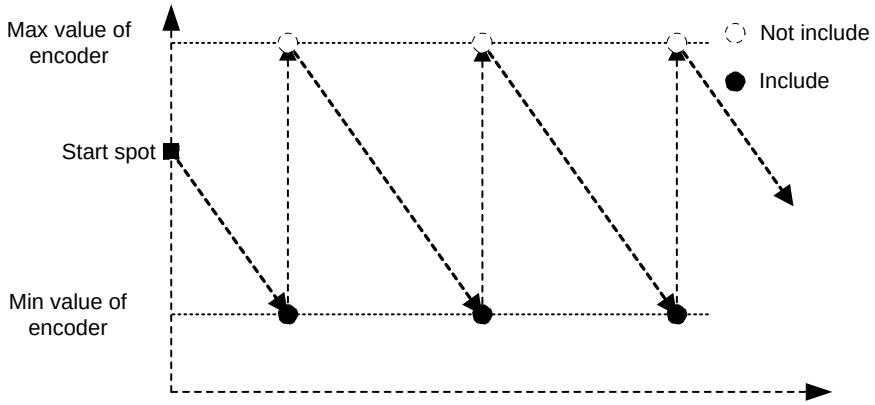

(3) Speed override

(a) When operate changing speed command (Speed override, Positioning speed override, etc), select speed(will be changed) or percentage of goal speed.

(b) In case of setting percentage (%) can set each per 0.01% from 0.01% to 655.35%.

4.8 Operation Data

▶ Here describes Operation Data of positioning module.

▶ Can set 400 operation data per each axis, operation of circular interpolation and Linear interpolation act in accordance with information of operation data.

4.8.1 Operation Data

<table>
<tr><th colspan="2">Operation data item</th><th>Setting range</th></tr>
<tr><td colspan="2">Goal position</td><td rowspan="2">㎜ : -2147483648 ~ 2147483647 [X10-4 ㎜]
Inch : -2147483648 ~ 2147483647 [X10-5Inch]
degree : -2147483648 ~ 2147483647 [X10-5degree]
pulse : -2147483648 ~ 2147483647 [pulse]</td></tr>
<tr><td colspan="2">Circular interpolation aux. Position</td></tr>
<tr><td colspan="2">Operation speed</td><td>㎜ : 1 ~ 2,147,483,647 [X10-2 ㎜/min]
Inch : 1 ~ 2,147,483,647 [X10-3Inch/min]
degree : 1 ~ 2,147,483,647 [X10-3 degree/min]
pulse : 1 ~ 2,147,483,647 [pulse/sec]</td></tr>
<tr><td colspan="2">Dwell time</td><td>0 ~ 65,535[ms]</td></tr>
<tr><td colspan="2">M Code no.</td><td>0 ~ 65,535</td></tr>
<tr><td colspan="2">Setting the axis of ordinates</td><td>Bit setting unit
<table>
<tr><td>Bit 7</td><td>Bit 6</td><td>Bit 5</td><td>Bit 4</td><td>Bit 3</td><td>Bit 2</td><td>Bit 1</td><td>Bit 0</td></tr>
<tr><td>-</td><td>-</td><td>-</td><td>-</td><td>Axis 4</td><td>Axis 3</td><td>Axis 2</td><td>Axis 1</td></tr>
</table></td></tr>
<tr><td colspan="2">Helical interpolation axis</td><td>0, 1 axis ~ 4 axis (Set‘0’,normal circular interpolation)</td></tr>
<tr><td colspan="2">The number of circular interpolation turn</td><td>0~65,535</td></tr>
<tr><td rowspan="9">Control Word</td><td>Coordinate (bit 0)</td><td>0:absolute, 1:relative</td></tr>
<tr><td>Control method (bit 1~3)</td><td>0:positioning reduction, 1:Speed control reduction,
2:reduction Feed control, 3:linear interpolation,
4:Circular interpolation</td></tr>
<tr><td>Operation method</td><td>0:Singular, 1:Repeat</td></tr>
<tr><td>Operation pattern</td><td>0:end, 1:Keep, 2: continuous</td></tr>
<tr><td>Circular size (bit 7)</td><td>0:Circular arc<180 1: Circular arc >=180</td></tr>
<tr><td>Acceleration No. (bit 8~9)</td><td>0 ~ 3</td></tr>
<tr><td>Deceleration No. (bit 10~11)</td><td>0 ~ 3</td></tr>
<tr><td>Circular interpolation method(bit 12~13)</td><td>0:midpoint, 1:central point, 2:radius</td></tr>
<tr><td>Circular interpolating direction (bit 14)</td><td>0:CW, 1:CCW</td></tr>
</table>

Notes

In case of setting unit of each axis as degree, can’t operate circular interpolation. Therefore it is idle to set value at the circular interpolating auxiliary position item.

4.8.2 Operation Data Setting

(1) Step No.

(a) The setting range of positioning data as serial no. is 0 ~ 400.

(b) The first Starting step of operation data is no.1 step.

Notes

In case of designating step No. is '0' with indirectness maneuver, maneuver at the same time, positioning same period, it means current operation step.

(2) Coordinate

(a) Coordinate of position data includes absolute coordinate and relative coordinate.

1) Absolute Coordinate (Control by Absolute method)

a) This carries out the positioning control from the current position to the goal position (the goal position assigned by positioning data).

b) Control is carried out based on the assigned position of homing (origin address).

c) Transfer direction shall be determined by the current position and goal position.

▶ Start position < Goal position : forward direction positioning

▶ Start position > Goal position : reverse direction positioning

[Example]

▷ When current position : 1000 , Goal position : 8000, forward direction transfer amount is 7000(8000-1000).

▷ Software Package Setting

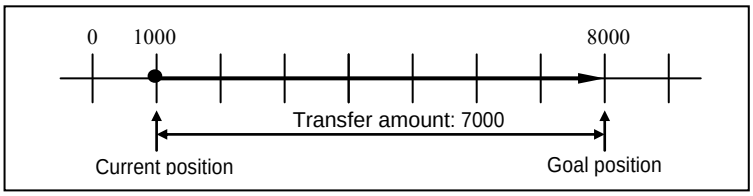

Notes

Control by Absolute method (Absolute coordinate) can start only in the state that the origin is determined. If starting in the state that the origin is not determined, Error will occur.

2) Relative Coordinate (Control by Incremental method)

a) This carries out the positioning control as much as goal transfer amount from the current position.

b) Transfer direction shall be determined by the sign of transfer amount.

▶ When transfer direction is (+) or no sign : forward direction positioning (position increase direction)

▶ When transfer direction is (-) : reverse direction positioning (position decrease direction)

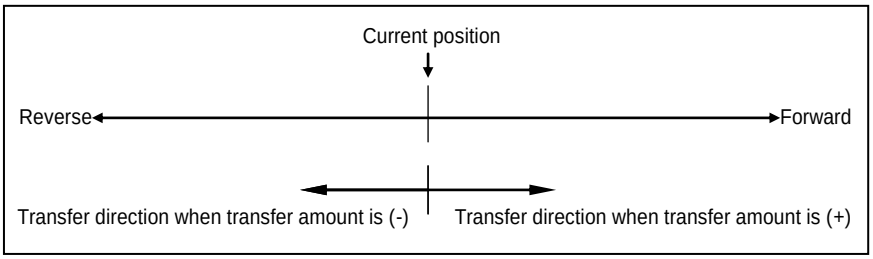

[Example]

▷ When current position : 5000 , Goal position : -7000, the positioning shall be done at –2000 position.

▷ Software Package Setting

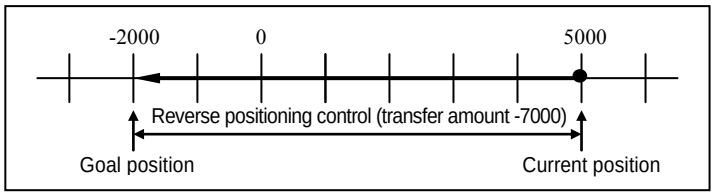

(3) Control Method

(a) Select the control method: single-axis position control, single-axis Speed control, single-axis Feed control, linear interpolation, circular interpolation.

(b) For further information, please refer to 9.2 Positioning control of Chapter 9 “Function”.

Notes

Set coordinate and control method in all at the same time in “control method” item with positioning software package. And the software package “Control Method” item is as follows ;

Absolute, Single-axis Positioning Control / Absolute, Single-axis Speed Control

/ Absolute, Single-axis FEED control / Absolute, linear Interpolation / Absolute, Circular Interpolation

/ Relative, Single-axis Positioning Control / Relative, Single-axis Speed Control

/ Relative, Single-axis FEED control / Relative, linear Interpolation / Relative, Circular Interpolation

(4) Operation Pattern (End/Keep/Continuous)

(a) Operation pattern is setting item, how can step of operation data connect with next step and operate.

(b) Select one operation pattern from End, Keep, Continuous operation.

(c) For further information, please refer to 9.2.2 operation mode of Positioning control of Chapter 9 “Function”.

(5) Operation Method (Singular/Repeat)

(a) Operating Method is an option for selecting a operating step after finish operating step from the driving data setting step.

(b) In case of setting singular, it will be select next step after finish operating settled step. If you set by Repeat, It will be select settled Repeat step after finish operating settled step.

(c) Select one positioning operation pattern from Singular, Repeat operation.

(d) For further information, please refer to 9.2.2 operation mode of positioning control of Chapter 9 “Function”.

Notes

Set operation pattern and operation method at the “operation method” item with XG-PM software package. These are “operation method” item; Singular,End / Singular,Keep / Singular,Continuous / Repeat,End / Repeat,Continuous / Repeat,Continuous.

(6) Goal Position

(a) This is the area to set the transfer amount of position data as “position value”.

(b) The setting range is –2,147,483,648 ~ 2,147,483,647(setting unit: pulse).

(7) M Code

(a) M code is applied to the whole axis in a bundle by M code mode set by positioning parameter and is given to each operation step no. as a Number within the setting range to use at Program.

(b) The setting range is 1 ~ 65,535

(c) M code no. can be identified by read by the operation state code

(d) For further information, please refer to M code output of 4.3.2.

(8) Acceleration/Deceleration No.

(a) The dual acceleration/deceleration time setting is available by setting the acceleration/deceleration time 1/2/3/ 4 of basic parameter as acceleration/deceleration no. 1/2/3/4 respectively.

(9) Operation Speed

(a) Operation speed is the goal speed which it is applied when it operate positioning

(b) Operation speed is set within the range that does not exceed Speed limit of basic parameter.

(10) Dwell Time

(a) This is the waiting time before carrying out the next positioning operation after completing one positioning operation.

(b) Setting range is 0 ~ 50,000 (㎳).

(c) Especially, in case of using SERVO motor, this is the data to set the waiting time by the stable stop state as positioning module is in the stop state but actual SERVO motor does not reach to the goal position or in transition state.

(d) While dwell time is active, the corresponding axis of positioning module maintains “ON” of the “in operation state” and if dwell time proceeds, “in operation state” becomes “OFF” and the positioning end signal becomes “ON”.

(11) Setting Axis of ordinates

(a) This is an option for axis of ordinates of driving shaft when should operate at least over 2 axis such as linear interpolation or circular interpolation.

(b) Setting each bit from 1 axis to 8 axis. Each bit is as follows ;

Bit 7	Bit 6	Bit 5	Bit 4	Bit 3	Bit 2	Bit 1	Bit 0
-	-	-	-	Axis 4	Axis 3	Axis 2	Axis 1

(c) Could choice multiple axises. For example, If choice axis 2 and axis 4 as axis of ordinates, set “000A’by hexadecimal in setting axis of ordinates.

(12) Circular interpolating auxiliary position

(a) This is an option for setting auxiliary data when the circular interpolation operates.

(b) According to circular interpolation, mean of circular interpolating auxiliary position is decided.

It means midpoint which is through by circular arc in midpoint method.

It is central point of circular arc in central point method. And It is radius of circular arc in radius method.

(c) In case that circular interpolation method is radius, be valid only value of circular interpolating auxiliary position of principal axis.

(d) For further information, please refer to “Circular interpolating control” of 9.2.9 ~ 9.2.11.

(13) Circular interpolating method

(a) This is an option for method setting from circular interpolating operation.

(b) There are three method for circular interpolation; midpoint, central point, radius.

(c) For further information, please refer to “Circular interpolation control” of 9.2.9 ~ 9.2.11.

(14) Circular interpolating direction

(a) This is an option for setting direction of drawing circle from circular interpolating operation when the operation starts.

(b) Circular interpolation direction is based on drawing circular interpolation when the principal axis is axis ‘X’ and the axis of ordinates is axis ‘Y’.

(c) This option is ignored from circular interpolation of midpoint because circular interpolating direction is selected by position of midpoint.

(d) For further information, please refer to circular interpolation of 9.2.9 ~ 9.2.11.

(15) Circular arc size

(a) When circular interpolating method is set by radius method, User can select one of 2 circular arcs.

(b) Select one of over the 180-degree circular interpolation or under the 180-degree circular interpolation.

(c) This option is ignored in the circular interpolation of midpoint method and central point method.

(d) For further information, please refer to designating radius circular interpolation of 9.2.11

Notes

Positioning software package set as follows at a time; circular arc method, circular interpolating direction, circular arc size with ‘Circular interpolating mode’.

Software package ‘Circular interpolating mode’ is as follows ;

Midpoint / Central point, CW / Central point, CCW / Radius, CW, Circular arc < 180-degree / Radius , CW , Circular arc >= 180-degree / Radius, CCW, Circular arc < 180-degree / Radius, CCW, Circular arc >= 180-degree

(16) The number of circular interpolating turn

(a) This is an option setting the number of rotation of circular arc when operating over the 360-degree. (b) Setting range is 1 ~ 65,535.

(17) Helical interpolation axis

(a) It is item which is setting axis for linear operation in operating helical interpolation.

(b) Settled axis from helical interpolation rectilinearly operates to settled position at the goal position.

(c) For further information, please refer to helical interpolating control of 9.2.12.

Chapter 5 Internal Memory and I/O Signal

5.1 Internal Memory

▶ Here describes the internal memory used for positioning module if XGK CPU module is used.

▶ Internal memory is used when executing direct Data read/write between positioning module and PLC CPU by using PUP(PUTP), GET(GETP) command instead of using the dedicated command. For Data read/write using the dedicated command, please refer to 6.2 Dedicated Command.

5.1.1 Step Data during Point Start

(1) Memory Address of POINT Start Step Data

Memory Address				Information
1 axis	2 axis	3 axis	4 axis	
1A1	221	2A1	321	Point Operation Step 1
1A2	222	2A2	322	Point Operation Step 2
1A3	223	2A3	323	Point Operation Step 3
1A4	224	2A4	324	Point Operation Step 4
1A5	225	2A5	325	Point Operation Step 5
1A6	226	2A6	326	Point Operation Step 6
1A7	227	2A7	327	Point Operation Step 7
1A8	228	2A8	328	Point Operation Step 8
1A9	229	2A9	329	Point Operation Step 9
1AA	22A	2AA	32A	Point Operation Step 10
1AB	22B	2AB	32B	Point Operation Step 11
1AC	22C	2AC	32C	Point Operation Step 12
1AD	22D	2AD	32D	Point Operation Step 13
1AE	22E	2AE	32E	Point Operation Step 14
1AF	22F	2AF	32F	Point Operation Step 15
1B0	230	2B0	330	Point Operation Step 16
1B1	231	2B1	331	Point Operation Step 17
1B2	232	2B2	332	Point Operation Step 18
1B3	233	2B3	333	Point Operation Step 19
1B4	234	2B4	334	Point Operation Step 20

(2) POINT Start Step Data Setting

(a) The POINT start step data setting command for POINT start e during POINT operation is XPWR.

(b) References for XPST (command of XGK point operating) and XPWR (command of point operating step data setting) are on ‘Chapter 6.3.41’.

(c) In PLC program, POINT operation data setting during POINT operation should be done in the step before POINT operation command is executed for normal action of POINT operation.

5.1.2 Teaching Data

(1) Memory Address of Teaching Data

Memory Address				Information
1 axis	2 axis	3 axis	4 axis	
180	200	280	300	Teaching Data1(LOWER)
181	201	281	301	Teaching Data 1(UPPER)
182	202	282	302	Teaching Data 2(LOWER)
183	203	283	303	Teaching Data 2(UPPER)
184	204	284	304	Teaching Data 3(LOWER)
185	205	285	305	Teaching Data 3(UPPER)
186	206	286	306	Teaching Data 4(LOWER)
187	207	287	307	Teaching Data 4(UPPER)
188	208	288	308	Teaching Data 5(LOWER)
189	209	289	309	Teaching Data 5(UPPER)
18A	20A	28A	30A	Teaching Data 6(LOWER)
18B	20B	28B	30B	Teaching Data 6(UPPER)
18C	20C	28C	30C	Teaching Data 7(LOWER)
18D	20D	28D	30D	Teaching Data 7(UPPER)
18E	20E	28E	30E	Teaching Data 8(LOWER)
18F	20F	28F	30F	Teaching Data 8(UPPER)
190	210	290	310	Teaching Data 9(LOWER)
191	211	291	311	Teaching Data 9(UPPER)
192	212	292	312	Teaching Data 10(LOWER)
193	213	293	313	Teaching Data 10(UPPER)
194	214	294	314	Teaching Data 11(LOWER)
195	215	295	315	Teaching Data 11(UPPER)
196	216	296	316	Teaching Data 12(LOWER)
197	217	297	317	Teaching Data 12(UPPER)
198	218	298	318	Teaching Data 13(LOWER)
199	219	299	319	Teaching Data 13(UPPER)
19A	21A	29A	31A	Teaching Data 14(LOWER)
19B	21B	29B	31B	Teaching Data 14(UPPER)
19C	21C	29C	31C	Teaching Data 15(LOWER)
19D	21D	29D	31D	Teaching Data 15(UPPER)
19E	21E	29E	31E	Teaching Data 16(LOWER)
19F	21F	29F	31F	Teaching Data 16(UPPER)

(2) Setting

(a) The command of Teaching data setting is XTWR.

(b) References for XTEAA (command of XGK Teaching) and XTWR (command of Teaching Data Setting) are on ‘Chapter 6.3.28.

(c) In PLC program, in order to carry out the normal action of Teaching command, the Teaching data setting should be done in the step before Teaching command is executed.

5.1.3 Step Data of Simultaneous Start

(1) Step Data of Simultaneous Start Memory Address

Memory Address				Information
1 axis	2 axis	3 axis	4 axis	
1B6	236	2B6	336	Simultaneous Start 1axis Step Number
1B7	237	2B7	337	Simultaneous Start 2axis Step Number
1B8	238	2B8	338	Simultaneous Start 3axis Step Number
1B9	239	2B9	339	Simultaneous Start 4axis Step Number

(2) Setting

(a) The command for Step Data of Simultaneous Start setting is XSWR.

(b) References for XSST (command of XGK Simultaneous Start) and XSWR(Setting command for Step Data of Simultaneous Start)are on ‘Chapter 6.3.6.

(c) In PLC program, in order to carry out the normal action of Simultaneous Start, the Step data setting of Simultaneous Start should be done in the step before Simultaneous Start command is executed.

5.1.4 State Information

(1) Memory Address of State Information

XSRD Command Device Offset	Memory Address				Information
	1 axis	2 axis	3 axis	4 axis	
0	1C0	240	2C0	340	Operation state bit information (Lower)
1	1C1	241	2C1	341	Operation state bit information (Upper)
2	1C2	242	2C2	342	Axis information
3	1C3	243	2C3	343	External I/O signal state
4	1C4	244	2C4	344	Current Position (LOWER)
5	1C5	245	2C5	345	Current Position (UPPER)
6	1C6	246	2C6	346	Current Position (LOWER)
7	1C7	247	2C7	347	Current Position (UPPER)
8	1C8	248	2C8	348	Step Number
9	1C9	249	2C9	349	M Code Number
10	1CA	24A	2CA	34A	Current error information
11	1CB	24B	2CB	34B	Error information 1
12	1CC	24C	2CC	34C	Error information 2
13	1CD	24D	2CD	34D	Error information 3
14	1CE	24E	2CE	34E	Error information 4
15	1CF	24F	2CF	34F	Error information 5
16	1D0	250	2D0	350	Error information 6
17	1D1	251	2D1	351	Error information 7
18	1D2	252	2D2	352	Error information 8
19	1D3	253	2D3	353	Error information 9
20	1D4	254	2D4	354	Error information 10
21	1D5	255	2D5	355	Encoder Value (LOWER)
22	1D6	256	2D6	356	Encoder Value (UPPER)

(2) Setting

(a) The area of state information of internal memory is the Read only area. Thus, it is available to use only by GET, GETP command. (PUT, PUTP command is not allowed to use in this area).

(b) The command of State Information ready only is XSRD.

(c) If you use only command XSRD, the information of axis status is read at the same time.

(d) If you want to choose to read among the state information, it is available to read memory address of above table using by GET/GETP

(e) Use of State Information

1) Operation State Bit Information (Lower)

Memory Address				Information
1 axis	2 axis	3 axis	4 axis	
1C0	240	2C0	340	Operation State bit Information (LOWER)

Bit 0	In Operation	[0: Stop, 1: In Operation]
Bit 1	Error State	[0: No Error, 1: Errors]
Bit 2	Positioning Completed	[0: Positioning not completed, 1: Positioning completed]
Bit 3	M Code Signal	[0: M Code Off, 1: M Code On]
Bit 4	Homing State	[0: Homing not completed 1: Homing completed]
Bit 5	No Use	[0]
Bit 6	Stop State	[0: Stop State not by Stop Command, 1: Stop State by Stop Command]
Bit 7	No Use	[0]
Bit 8	High-end detection	[0: No Detection, 1: Detection]
Bit 9	The lower limit of detection	[0: No Detection, 1: Detection]
Bit 10	Emergency Stop State	[0: Normal, 1: Emergency Stop]
Bit 11	Forward/Reverse	[0: Forward, 1: Reverse]
Bit 12	Acceleration State	[0: No Accelerating, 1: Accelerating]
Bit 13	Constant Speed State	[0: Not Under Constant , 1: Under Constant]
Bit 14	Deceleration State	[0: No Decelerating, 1: Decelerating]
Bit 15	Dwell State	[0: No Dwelling , 1: Dwelling]

2) Operation State Bit Information (Upper)

Memory Address				Information
1 axis	2 axis	3 axis	4 axis	
1C1	241	2C1	341	Operation State Bit Information (UPPER)

Bit 0	Axis 1 Position Controlling	[0: Axis 1 Position not in control, 1: Axis 1 Position in control]
Bit 1	Axis1 Speed Controlling	[0: Axis 1 Speed not in control, 1: Axis 1 Speed in control]
Bit 2	Linear Interpolation in Operation	[0: Linear Interpolation not in Operation, 1: Linear Interpolation in Operation]
Bit 3	No Use	[0]
Bit 4	Circular Interpolation in Operation	[0: Circular Interpolation not in Operation, 1: Circular Interpolation in Operation]
Bit 5	Homing Operating	[0: Homing not in Operation, 1: Homing in Operation]
Bit 6	Synchronous Start by Position in Operation	[0: Synchronous Start by position not in Operation, 1: Synchronous Start by position in Operation]
Bit 7	Synchronous Start by Speed in Operation	[0: Synchronous Start by Speed not in Operation, 1: Synchronous Start by Speed in Operation]
Bit 8	JOG in Operation	[0: JOG not in Operation, 1: JOG in Operation]
Bit 9	No Use	[0]
Bit 10	Inching in Operation	[0: Inching not in Operation, 1: Inching in Operation]
Bit 11	No Use	[0]
Bit 12	RTP*1 in Operation	[0: RTP not in Operation, 1: RTP in Operation]
Bit 13	CAM in Operation	[0: CAM not in Operation, 1: CAM in Operation]
Bit 14	FEED in Operation	[0: FEED not in Operation, 1: FEED in Operation]
Bit 15	Circular Interpolation in Operation	[0: Circular Interpolation not in Operation, 1: Circular Interpolation in Operation]

Notes

*1
RTP: Return to Position Before Manual Operation

3) Axis Information

Memory Address				Information
1 axis	2 axis	3 axis	4 axis	
1C2	242	2C2	342	Axis Information

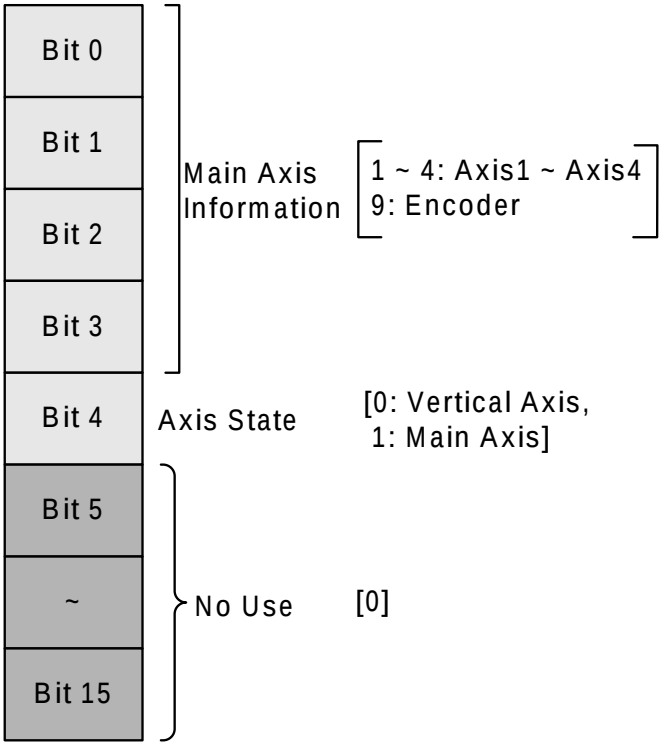

4) External I/O Signal State

Memory Address				Information
1 axis	2 axis	3 axis	4 axis	
1C3	243	2C3	343	External I/O Signal State

Bit 0	External Emergency/Deceleration Stop Signal *1	[0: External Emergency Stop/Deceleration Stop Signal OFF, 1: External Emergency Stop/Deceleration Stop ON]
Bit 1	No Use	[0]
Bit 2		
Bit 3		
Bit 4	External High-end Signal	[0: External High-end Signal OFF, 1: External High-end Signal ON]
Bit 5	External Lower Limit Signal	[0: External Lower Limit OFF, 1: External Lower Limit ON]
Bit 6	Origin Signal	[0: Origin Signal OFF, 1: Origin Signal ON]
Bit 7	Near Point Signal	[0: Near Point Signal OFF, 1: Near Point Signal ON]
Bit 8	Speed/Position Switching Control Signal	[0: External Speed/Position Switching Control Signal OFF, 1: External Speed/Position Switching Control Signal ON]
Bit 9	No Use	[0]
Bit 10		
Bit 11	Drive Ready Signal	[0: Drive Ready Signal OFF, 1: Drive Ready Signal ON]
Bit 12	Deviation Counter Clear / Setting Position Output Signal	[0: Not in Position Section, 1: In Position Section
Bit 13		[0: Deviation Counter Clear Output Signal , 1: Setting Position Output Signal]
Bit 14	No Use	[0]
Bit 15		

Notes

*1

External emergency stop / deceleration stop signal: It operates either 'Emergency stop' or 'Deceleration stop' according to selection of expanded parameter setting between 'Emergency stop / deceleration stop

5.2 I/O Signal

Here describes the contents and functions of I/O signal for the exchange of data between Positioning module and XGK CPU module.

5.2.1 Contents of I/O Signal

(1) I/O signal of positioning module uses input: 16 bits and output: 16 bits.

(2) Positioning Module operation ready signal (Uxx.00.F) becomes “ON” only when Modules are in normal state in H/W and it always keeps “ON” regardless of PLC operation mode.

(3) Output Signal

This is the signal which transfers to positioning module from PLC CPU.

Signal Direction: PLC CPU		□ Posit
Axis	Input Signal	Description
1 axis	Uxx.01.0	1 axis forward direction Jog
	Uxx.01.1	1 axis reverse direction Jog
	Uxx.01.2	1 axis Jog high/low speed
	Uxx.01.3	No use
2 axis	Uxx.01.4	2 axis forward direction Jog
	Uxx.01.5	2 axis reverse direction Jog
	Uxx.01.6	2 axis Jog high/low speed
	Uxx.01.7	No use
3 axis	Uxx.01.8	3 axis forward direction Jog
	Uxx.01.9	3 axis reverse direction Jog
	Uxx.01.A	3 axis Jog high/low speed
	Uxx.01.B	No use
4 axis	Uxx.01.C	4 axis forward direction Jog
	Uxx.01.D	4 axis reverse direction Jog
	Uxx.01.E	4 axis Jog high/low speed
	Uxx.01.F	No use

(4) Input Signal

This is the Signal which transfers to PLC CPU from Positioning Module.

Axis	Signal Direction: PLC CPU □ Pos	
	Input Signal	Description
-	Uxx.00.0	No use
-	Uxx.00.1	No use
-	Uxx.00.2	No use
-	Uxx.00.3	No use
-	Uxx.00.4	No use
-	Uxx.00.5	No use
-	Uxx.00.6	No use
-	Uxx.00.7	No use
-	Uxx.00.8	No use
-	Uxx.00.9	No use
-	Uxx.00.A	No use
-	Uxx.00.B	No use
-	Uxx.00.C	No use
-	Uxx.00.D	No use
-	Uxx.00.E	No use
Common	UXX.00.F	Positioning Module ready

5.2.2 Use of I/O Signal

(1) JOG Operation

(a) Forward/Reverse Jog Signals show the direction of Jog Operation. The Jog operation shall be divided into Forward/Reverse direction according to the On/Off signals. When Forward Jog Signal is On, it starts Forward Operation and When Jog Signal is Off, it starts Reverse Operation. When both signals Off, it stops Jog Signals. When both signals On, it does Forward Jog Signal.

Forward Jog Signal	Reverse Jog Signal	Jog Operation Status
On	Off	Forward Jog Operation
Off	On	Reverse Jog Operation
Off	Off	Stop
On	On	Forward Jog Operation

(b) If Jog direction is changed during Jog operation, it slows down at first and then operates as the direction it changed.

(c) According to value of Jog low/high Signals, it could operate with low/high speed. When jog low/high signals Off, it operates with low speed and when they are ON, it operates with high speed.

(d) If you change value of low/high jog signals during Jog operation, there will be no stop and apply the speed as you changed.

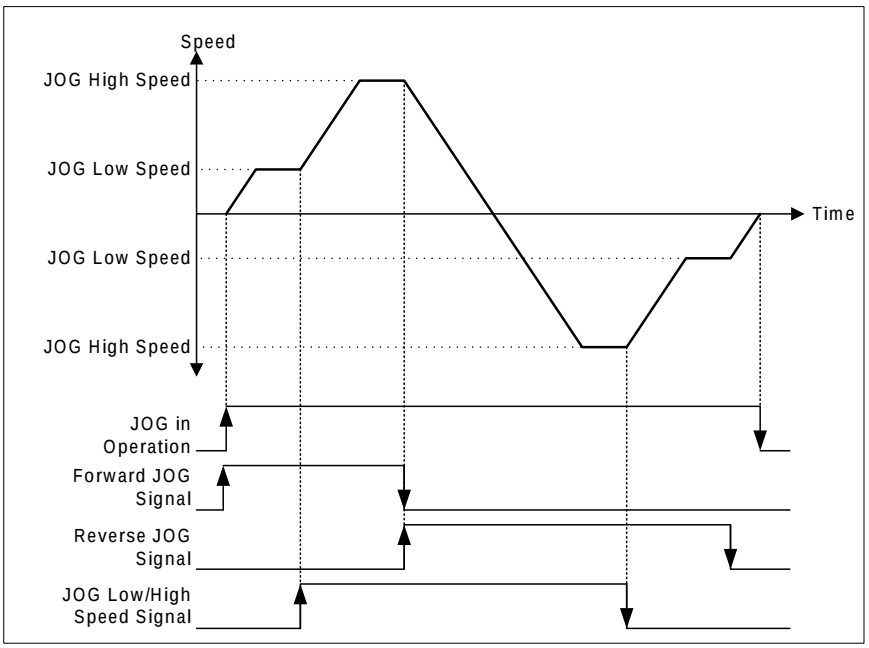

Chapter 6 Command

Here describes the positioning command used in XGK CPU Module.

6.1 Contents of General Command

Command	Command description	Command condition
PUT	Internal memory write (Level)	Base, memory address, save device leading address, data number to write at one time
PUTP	Internal memory write (Edge)	Base, memory address, save device leading address, data number to write at one time
GET	Internal memory read (Level)	Base, memory address, save device leading address, data number to write at one time
GETP	Internal memory read (Edge)	Base, memory address, save device leading address, data number to write at one time

6.1.1 Internal Memory Read (GET, GETP Command)

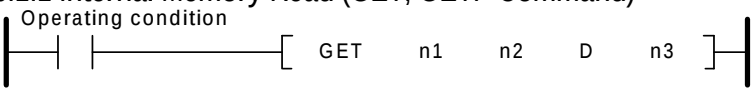

Form	Description	Available area
n1	Base and slot No. installed with special module	Constant
n2	Leading address of special module internal memory to read a data	Constant
D	Leading address of device to save the data to read	M, P, K, L, U, N, D, R
n3	Word number of data to read	M, P, K, L, Constant

(1) Difference between GET Command and GETP Command

(a) GET Command

Always execute when operating condition is ON. (Level)

That is, when execute condition is ON, it operates continuously.

(b) GETP Command

Execute with operation start of execute condition. (Edge)

That is, when execute condition is ON, it operates only one time.

To operate again, execute condition should be off and on again.

Examp The case is that read current position, current speed and step number from axis 4 state information of positioning module which installed in No.0 base, No.2 slot to PLC CPU M0000.

Set the number of data as 5 to read 5 Word from current position to step number.

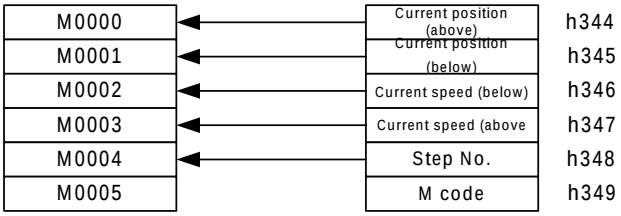

6.1.2 Internal Memory Write (PUT, PUTP Command)

Form	Description	Available area
n1	Base and slot No. installed with special module	Constant
n2	Leading address of special module internal memory to write a data	Constant
S	Leading address of device that the data to Write is saved	M, P, K, L, U, N, D, R
n3	Word number of data to write	M, P, K, L, Constant

(1) Difference between GET Command and GETP Command

(a) PUT Command

Always execute when operating condition is ON. (Level)

That is, when execute condition is ON, it operates continuously.

(b) PUTP Command

Execute with operation start of execute condition. (Edge)

That is, when execute condition is ON, it operates only one time.

To operate again, execute condition should be off and on again.

Examp The case that is installed in positioning module No.0 base, slot No.1 and writes value of CPU module as axis 3 teaching value by 16 Word data of D00000~D00015.

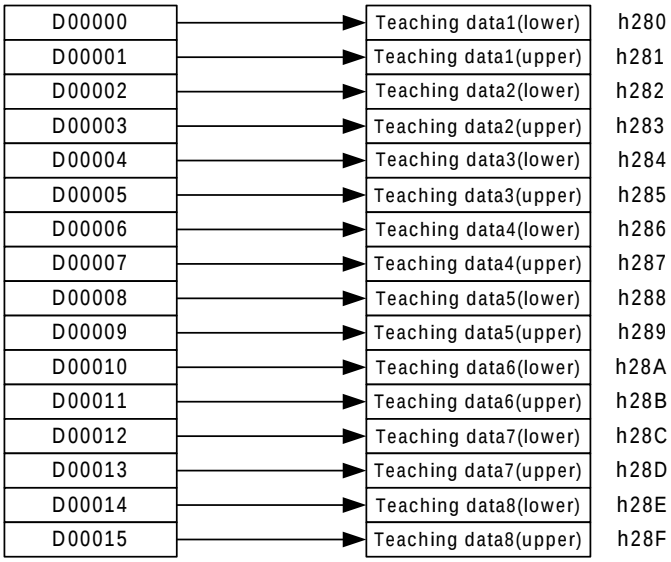

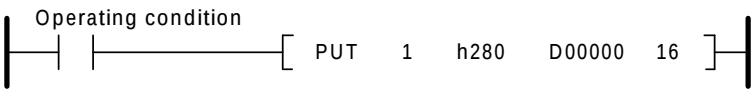

6.2 Dedicated Commands

Command	Command description	Command condition
XORG	Homing start	Slot, command axis
XFLT	Floating origin setting	Slot, command axis
XDST	Direct start	Slot, command axis, position, speed, dwell time, M code, control word
XIST	Indirect start	Slot, command axis, step no.
XSST	Simultaneous start	Slot, command axis, Simultaneous start axis
XSWR	Simultaneous start step setting	Slot, command axis, step no., device, number of steps
XELIN	Ellipse interpolation	Slot, command axis, ratio of the ellipse, driving angle
XVTP	Speed/position switching control	Slot, command axis
XVTPP	Position specified speed/position switching control	Slot, command axis, target position
XPTV	Position/speed switching control	Slot, command axis
XSTP	Deceleration stop	Slot, command axis, deceleration time
XSKP	Skip operation	Slot, command axis
XSSP	Position synchronous start	Slot, command axis, step no., main axis position, main axis setting
XSSS	Speed synchronous start	Slot, command axis, main axis rate, subordinate axis rate, main axis setting
XSSSP	Position assigned Speed synchronous start	Slot, command axis, main axis rate, subordinate axis rate, main axis setting, goal position
XCAM	CAM Operation	Slot, command axis, main axis setting, CAM block no.
XCAMO	Main axis offset-specified CAM operation	Slot, command axis, main axis setting, CAM block no., main axis offset
XPOR	Position override	Slot, command axis, position
XSOR	Speed override	Slot, command axis, speed
XPSO	Position assigned speed override	Slot, command axis, position, speed
XNMV	Continuous operation	Slot, command axis
XINCH	Inching operation	Slot, command axis, inching amount
XRTP	Return to the previous position of manual operation	Slot, command axis
XSNS	Start step No. change	Slot, command axis, step no.
XSRS	Repeat step No. change	Slot, command axis, step no.
XMOF	M code release	Slot, command axis
XPRS	Current position preset	Slot, command axis, position
XEPRS	Encoder preset	Slot, command axis, position, Encoder No.(=0)
XTEAA	Teaching Array	Slot, command axis, step no., RAM/ROM, position/speed, Teaching no.
XTWR	Teaching array data setting	Slot, command axis, teaching data device, no. of teaching
XSBP	Basic parameter teaching	Slot, command axis, basic parameter change value, item to change, RAM/ROM
XSEP	Extended parameter setting	Slot, command axis, extended parameter change value, item to change, RAM/ROM
XSHP	Homing parameter setting	Slot, command axis, homing parameter change value, item to change, RAM/ROM
XSMP	Manual operation parameter setting	Slot, command axis, manual operation parameter change value, item to change, RAM/ROM
XSES	Input signal parameter setting	Slot, command axis, input signal parameter change value, RAM/ROM
XSCP	Common parameter setting	Slot, command axis, common parameter change value, item to change, RAM/ROM
XSMD	Operation data teaching	Slot, command axis, operation data value, operation data item, step no., RAM/ROM
XVRD	Variable data reading	Slot, command axis, read address, block offset, block size, block count
XVWR	Variable data writing	Slot, command axis, data device, write address, block offset, block size, block count
XWRT	Parameter/operation data save	Slot, command axis, axis information
XEMG	Emergency stop	Slot, command axis
XCLR	Error reset	Slot, command axis, common error reset
XECLR	Error history reset	Slot, command axis
XPST	Point Start	Slot, command axis, step no.
XPWR	Point start step data setting	Slot, command axis, step data device, step no.

XSRD	Operation state reading	Slot, command axis, operation state save, device no.
XRSTR	Restart	Slot, command axis
XPOE	Setting position output enable/disable	Slot, command axis, data number, time, enable/disable

Note

(1) The dedicated command acts at Rising edge. That is, it executed the first action once when input condition is “ON.” To execute the action again, It should be “OFF” and then “ON” again. SRD just execute High level action. When input condition is “On,” it keeps operating and it doesn’t operate when it’s “Off.”

(2) XPM Command execution time is as below.

(a) XWRT : 15ms (per axis1)

(b) Command except XWRT : 2ms

6.3 Use of Dedicated Command

Here describes the command usage based on 1 axis when the positioning module is inserted into slot 1 of XGK CPU module. The position and speed use the units of pulse and pulse/sec [pps], respectively.

Notes

▶ This is the method used with the operation state bit(in operation, error state) read by using SRD as the program operation condition

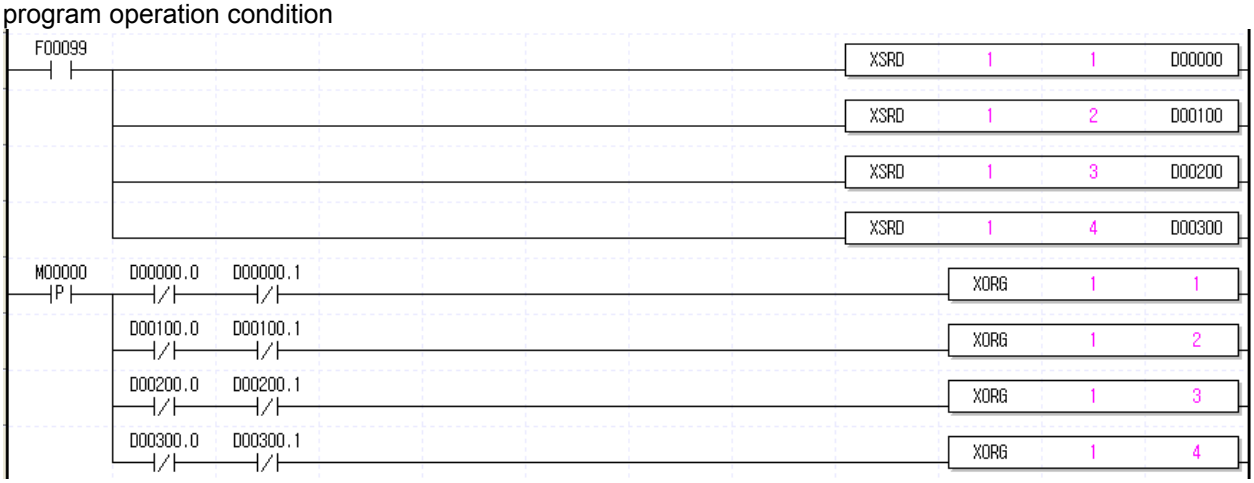

※ D00000.0: 1 axis in operation, D00000.1: 1 axis error state
D00100.0: 2 axis in operation, D00100.1: 2 axis error state
D00200.0: 3 axis in operation, D00200.1: 3 axis error state
D00300.0: 4 axis in operation, D00300.1: 4 axis error state

▶ The example program for command in this Chapter 6 also uses the operation state bit as the program operation condition as the above.

Notes

▶ All dedicated commands except XSRD, XPWR, XSWR and XTWR are not allowed to use together for one command execution axis (if it is used like the below example program, a command does not work properly).

If executing other command

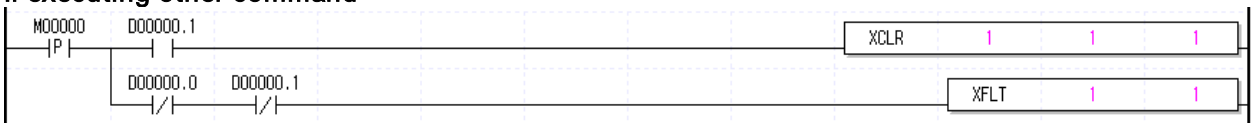

If executing same command

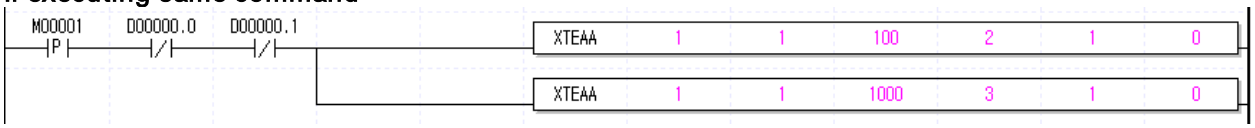

▶ A same command can not be executed for other axis.

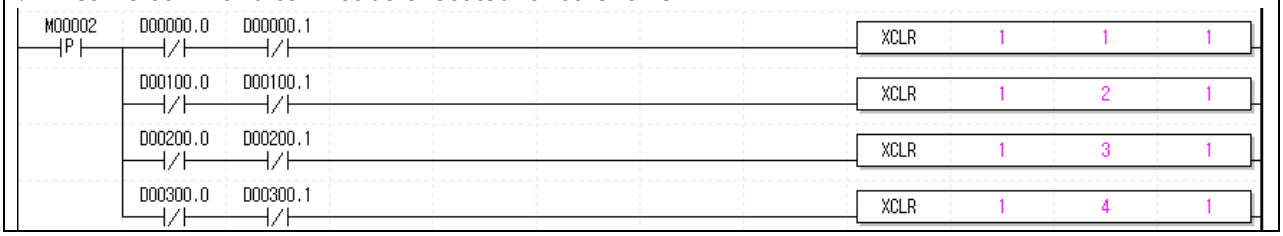

6.3.1 Homing start (Command : XORG)

(1) Program

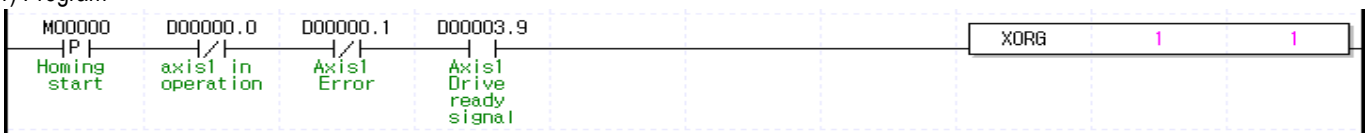

(2) Description

Device	Description
M00000	axis1 homing start input
D00000.0	axis1 signal in operation
D00000.1	axis1 error state
D00003.9	axis1 drive ready signal

Command	XORG				Homing start
Operand	OP1	Slot	Constant	WORD	Slot No. installed with APM module
	OP2	Axis	PMLK, constant, D, Z, R, ZR	WORD	Command axis (1~4 : axis1 ~ axis4)

※ PMLK means P, M, L and K areas.

(a) If homing start command is executed, it carries out homing operation by the setting homing parameter and if homing is complete by external input signal, the origin determination end signal is “ON”.

(b) Please refer to "9.1 Homing Start” about detailed explanation of Homing Start.

(c) D device signal (axis1 Signal in Operation, etc) which used in the example above is an assumption that saving the axis state value in D device area with XSRD command.

6.3.2 Floating origin setting (Command : XFLT)

(1) Program

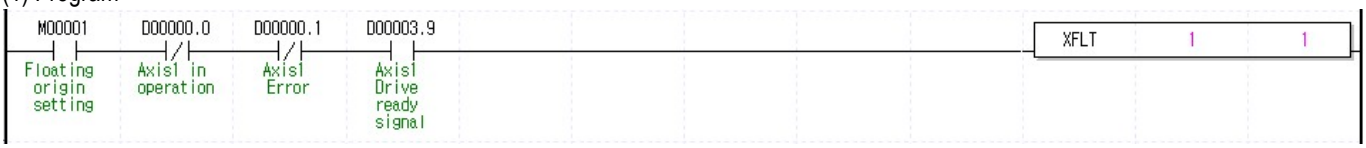

(2) Description

Device	Description
M00001	axis1 floating origin setting input
D00000.0	axis1 operating signal
D00000.1	axis1 error state
D00000.9	axis1 drive ready signal

Command	XFLT				Floating origin setting
Operand	OP1	Slot	Constant	WORD	Slot No. installed with APM module
	OP2	Axis	PMLK,constant,D,Z,R,ZR	WORD	Command axis (1~4 : axis1 ~axis4)

※ PMLK means P, M, L and K areas.

(a) If the floating origin setting command is executed, the current position is changed to the origin address of homing parameter and the origin determination signal (bit) is ON.

(b) Floating origin setting that different from homing origin is set at the current position and can not be set in operation.

(c) D device signal (axis1 Signal in Operation, etc) which used in the example above is an assumption that saving the axis state value in D device area with XSRD command.

6.3.3 Direct start (Command : XDST)

(1) Program

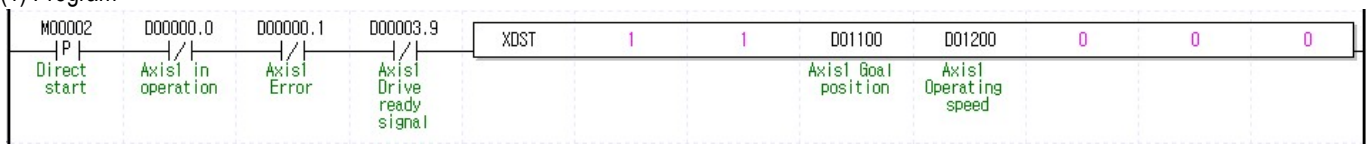

(2) Description

Device	Description
M00002	axis1 direct start input
D00000.0	axis1 signal in operation
D00000.1	axis1 error state
D00003.9	axis1 drive ready signal

Command	XDST				Direct start
Operand	OP1	Slot	Constant	WORD	Slot No. installed with APM module
	OP2	Axis	PMLK,constant,D,Z,R,ZR	WORD	Command axis (1 ~ 4 : axis1 ~ axis4)
	OP3	Goal position	PMLK,constant,D,Z,R,ZR	DINT	Goal position (-2,147,483,648 ~ 2,147,483,647)
	OP4	Goal speed	PMLK,constant,D,Z,R,ZR	DWORD	Goal speed
	OP5	Dwell time	PMLK,constant,D,Z,R,ZR	WORD	Dwell time (0~65535)
	OP6	M code	PMLK,constant,D,Z,R,ZR	WORD	M code (0~65535)
	OP7	Control word	PMLK,constant,D,Z,R,ZR	WORD	

※ PMLK means P, M, L and K areas.

(a) Details of Control word (OP7) for each Bit are as follows.

15 ~ 12	11 ~ 10	9 ~ 8	7 ~ 5	4	3 ~ 2	1 ~ 0
-	Dec. Time	Acc. Time	-	0:Absolute 1:Relative	-	0:Position Control 1:Speed control 2:Feed Control

(b) If control word is h0012, it shall be set by Feed control, relative, acc./dec. time 1.

(c) No.2~3, 5~7, 12~15 Bit of control word is the unused area and does not affect the setting.

(d) D device signal (axis1 Signal in Operation, etc) which used in the example above is an assumption that saving the axis state value in D device area with XSRD command.

6.3.4 Indirect start (Command : XIST)

(1) Program

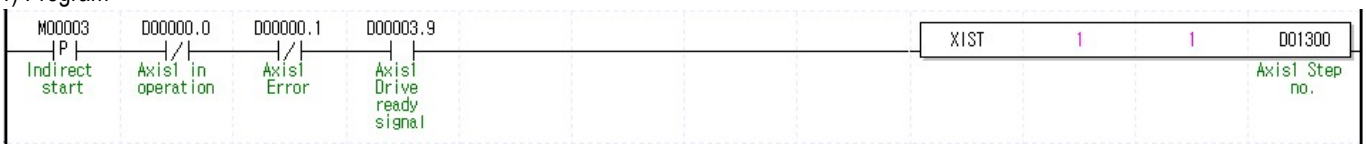

(2) Description

Device	Description
M00003	axis1 indirect start input
D00000.0	axis1 signal in operation
D00000.1	axis1 error state
D01300	axis1 step no.
D00003.9	axis1 drive ready signal

Command	DST				Indirect start
Operand	OP1	Slot	Constant	WORD	Slot No. installed with APM module
	OP2	Axis	PMLK,constant,D,Z,R,ZR	WORD	Command axis (1 ~ 4 : axis1 ~ axis4)
	OP3	Operation step	PMLK,constant,D,Z,R,ZR	WORD	Step No. to operate (0~400)

※ PMLK means P, M, L and K areas.

(a) If operation step No. is set as “0” in indirect start, it will be operated as current step No. If other number except 0 is set as the operation step number, it operates only for step no. set.

(b) If operation pattern is set as continuance or go-on, several steps can be operated by an indirect start command.

(c) D device signal (axis1 Signal in Operation, etc) which used in the example above is an assumption that saving the axis state value in D device area with XSRD command.

6.3.5 Simultaneous Start (Command : XSST)

(1) Program

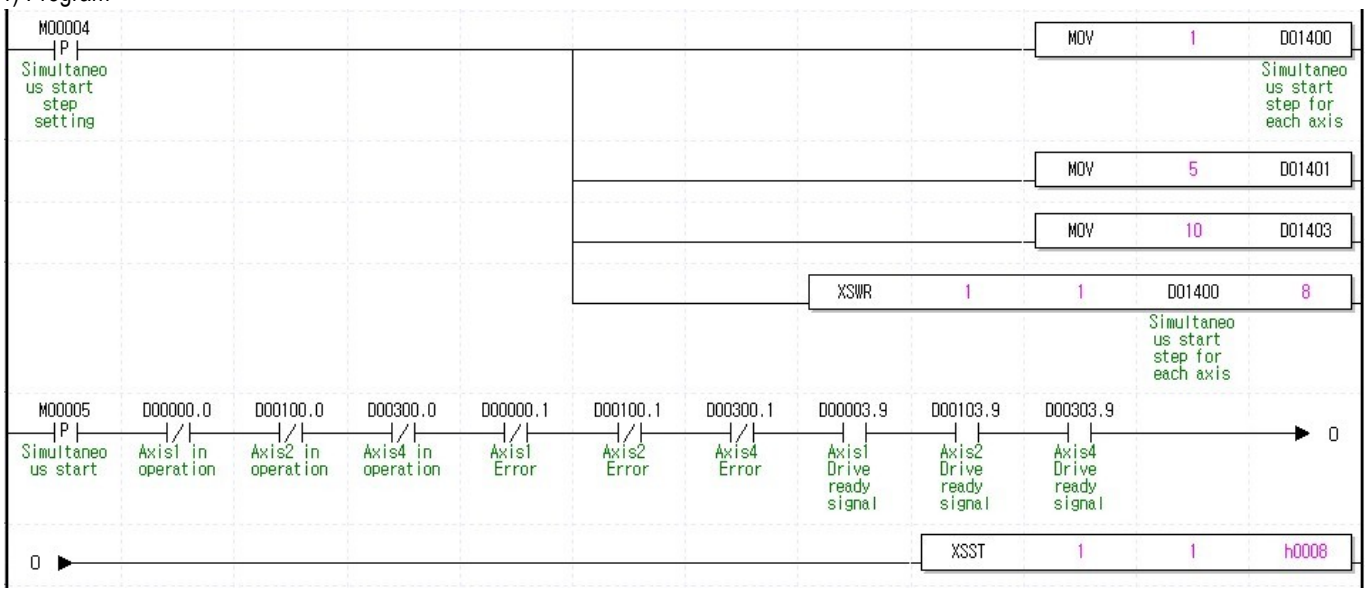

(2) Description

Device	Description
M00004	Simultaneous start step setting
M00005	Simultaneous start input
D00000.0	axis1 signal in operation
D00000.1	axis1 error state
D00003.9	axis1 drive ready signal
D00100.0	axis2 signal in operation
D00100.1	axis2 error state
D00103.9	axis2 drive ready signal
D00300.0	axis4 signal in operation
D00300.1	axis4 error state
D00303.9	axis4 drive ready signal
D01400	axis1 simultaneous start step
D01401	axis2 simultaneous start step
D01403	axis4 simultaneous start step

Command	XSST				Linear interpolation
Operand	OP1	Slot	Constant	WORD	Slot No. installed with APM module
	OP2	Axis	PMLK,constant,D,Z,R,ZR	WORD	Command axis (1 ~ 4 : axis1 ~ axis4)
	OP3	Operation axis	PMLK,constant,D,Z,R,ZR	WORD	Operating axis setting

※ PMLK means P, M, L and K areas.

(a) Simultaneous command is the command operates simultaneous steps saved in ‘operation axis(OP3)’ at a time.

(b) Axis setting is set by setting the bits to the axis

15 ~ 4 Bit	3Bit	2Bit	1Bit	0Bit
Not use	axis4	axis3	axis2	axis1

That is, axis4, axis2, axis1 will be set if set as h000B.

But, the axis which command simultaneous start is basically included without being set in operating axis.

(c) In the example program above, axis1 operates step no.1, axis2 operates step no.5, 5 axes operates step no.10.

(d) To set steps of axis for simultaneous start, use XSWR command or PUT/PUTP command to set simultaneous start step no. on

simultaneous start step memory address. This must be complete before simultaneous start executes.

(e) D device signal (axis1 Signal in Operation, etc) which used in the example above is an assumption that saving the axis state value in D device area with XSRD command.

6.3.6 Simultaneous Start Step Setting (Command : XSWR)

(1) Program

Refer to the chapter 6.3.5 for example program.

(2) Description

Refer to the chapter 6.3.5 for example program.

Command	XSWR				Simultaneous start step setting
Operand	OP1	Slot	Constant	WORD	Slot no. installed with APM module
	OP2	Axis	PMLK,constant,D,Z,R,ZR	WORD	Axis to command (1 ~ 4 : axis1 ~ axis4)
	OP3	Device	PMLK,constant,D,Z,R,ZR	WORD	The device leading no. has simultaneous start step no.
	OP4	Number of step	PMLK,constant,D,Z,R,ZR	WORD	The number of step to use.

※ PMLK means P, M, L and K areas.

(a) Simultaneous start step command read data as many as “number of step (OP4)” from designated data address on “device (OP3)” and save it on simultaneous start step of APM

(b) In the example program above, save 4 WORD data from D1400 address as simultaneous start step of APM

(c) To set steps of axis for simultaneous start, use XSWR command or PUT/PUTP command to set simultaneous start step no. on simultaneous start step memory address. This must be complete before simultaneous start executes.

(d) When using PUT command to set simultaneous start, refer to the memory address of “5.1.3 simultaneous start step data” and “6.1.2 internal memory writing”. If use PUT command on the above example program, be able to use as below.

6.3.7 Ellipse Interpolation (Command : XELIN)

(1) Program

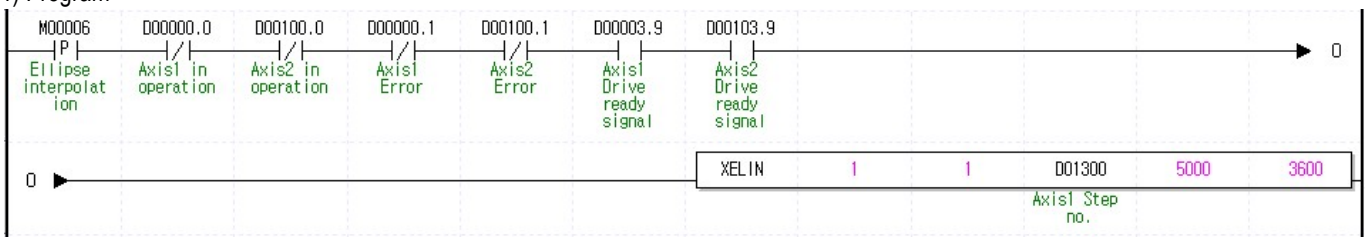

(2) Description

Device	Description
M00006	axis1/axis2 ellipse interpolation input
D00000.0	axis1 signal in operation
D00000.1	axis1 error state
D00003.9	axis1 drive ready signal
D00100.0	axis2 signal in operation
D00100.1	axis2 error state
D00103.9	axis2 drive ready signal
D01300	axis1 operation step

Command	XSST				Simultaneous start
Operand	OP1	Slot	Constant	WORD	Slot No. installed with APM module
	OP2	Axis	PMLK,constant,D,Z,R,ZR	WORD	Command axis (1 ~ 4 : axis1 ~ axis4)
	OP3	operation step	PMLK,constant,D,Z,R,ZR	WORD	Step no. to execute ellipse interpolation
	OP4	Ellipse ratio	PMLK,constant,D,Z,R,ZR	WORD	Ellipse ratio (%)
	OP5	Operation degree	PMLK,constant,D,Z,R,ZR	WORD	Degree for ellipse interpolation

※ PMLK means P, M, L and K areas.

(a) Ellipse interpolation distorts operation data which set as circular arc interpolation by ratio set on ellipse ratio and executes ellipse operation by set degree on OP5. Therefore, step of operation data set on operation step (OP3) must be set as circular arc interpolation control.

(b) Ellipse ratio is able to be set from 1 to 65535, has [$X10^{-2}$ %] unit. That is, 65535 will be 655.35%.

(c) Operation degree is able to be set from 1 to 65535, has [$X10^{-1}$ degree] unit. That is, 3650 will be 365.0 degree.

(d) D device signal (axis1 Signal in Operation, etc) which used in the example above is an assumption that saving the axis state value in D device area with XSRD command.

6.3.8 Speed/Position Switching Control (Command : XVTP)

(1) Program

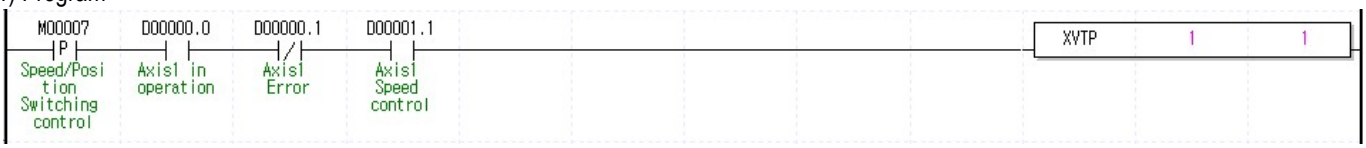

(2) Description

Device	Description
M00007	axis1 speed/position switching control input
D00000.0	axis1 signal in operation
D00000.1	axis1 error state
D00001.1	axis1 signal in speed control

Command	XVTP				Speed/position switching control
Operand	OP1	Slot	Constant	WORD	Slot No. installed with APM module
	OP2	Axis	PMLK,constant,D,Z,R,ZR	WORD	Command axis (1 ~ 4 : axis1 ~ axis4)

※ PMLK means P, M, L and K areas.

(a) If speed/position switching control is executed in the state of speed control operation, it shall be switched to position control and positioning operation is executed with the position set in the speed control.

(b) For detail description about speed/position switching control, refer to “9.2.14 Speed/Position Switching Control”

(c) D device signal (axis1 Signal in Operation, etc) which used in the example above is an assumption that saving the axis state value in D device area with XSRD command.

6.3.9 Position specified Speed/Position Switching Control (Command : XVTPP)

(1) Program

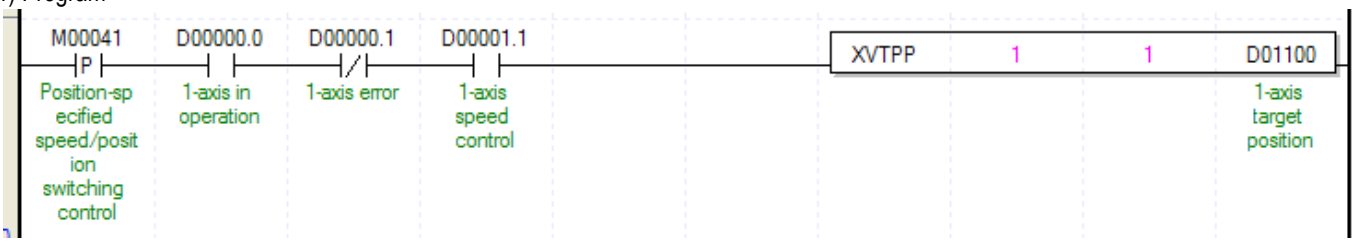

(2) Description

Device	Description
M00041	1-axis position-specified speed/position switching control input
D00000.0	1-axis signal in operation
D00000.1	1-axis error state
D00001.1	1-axis signal in speed control
D01100	1-axis target position

Command	XVTPP				Speed/position switching control
Operand	OP1	Slot	Constant	WORD	Slot No. installed with APM module
	OP2	Axis	PMLK,constant,D,Z,R,ZR	WORD	Command axis (1 ~ 4 : axis1 ~ axis4)
	OP3	Target position	PMLK,constant,D,Z,R,ZR	DINT	Transfer amount after position control switching

※ PMLK means P, M, L and K areas.

(a) If speed/position switching control is executed in the state of speed control operation, it shall be switched to position control and positioning operation is executed with the position set in the speed control.

(b) For detail description about speed/position switching control, refer to “9.2.15 Position-specified Speed/Position Switching Control”

(c) D device signal (axis1 Signal in Operation, etc) which used in the example above is an assumption that saving the axis state value in D device area with XSRD command.

6.3.10 Position/Speed Switching Control (Command : XPTV)

(1) Program

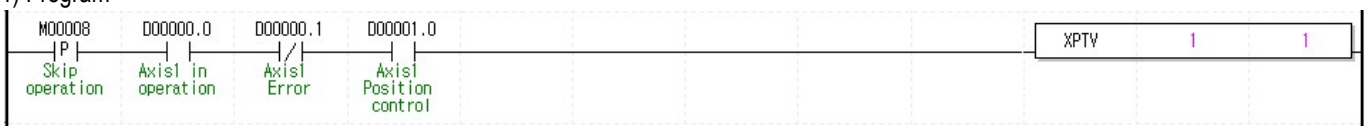

(2) Description

Device	Description
M00008	axis1 position/speed switching control input
D00000.0	axis1 signal in operation
D00000.1	axis1 error state
D00001.0	axis1 signal in position control

Command	PTV				Position/speed switching control
Operand	OP1	Slot	Constant	WORD	Slot No. installed with APM module
	OP2	Axis	PMLK,constant,D,Z,R,ZR	WORD	Command axis (1 ~ 4 : axis1 ~ axis4)

※ PMLK means P, M, L and K areas.

(a) If position/speed switching control is executed during position control operation, it is converted to speed control, operates at the speed set during position control and stops by executing deceleration stop.

(b) For the detail description about position/speed switching control, refer to “9.2.15 Position/Speed Switching Control”.

(c) D device signal (axis1 Signal in Operation, etc) which used in the example above is an assumption that saving the axis state value in D device area with XSRD command.

6.3.11 Deceleration Stop (Command : XSTP)

(1) Program

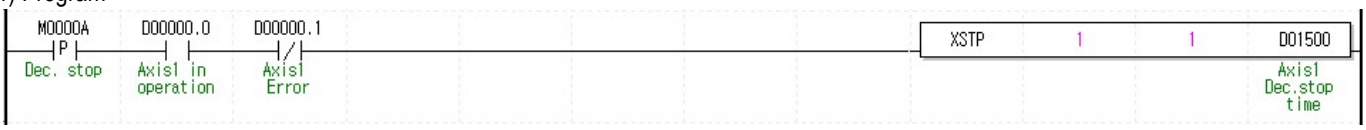

(2) Description

Device	Description
M0000A	axis1 deceleration stop input
D00000.0	axis1 signal in operation
D00000.1	axis1 error state
D01500	axis1 deceleration stop time set

Command	STP				Deceleration stop
Operand	OP1	Slot	Constant	WORD	Slot No. installed with APM module
	OP2	Axis	PMLK,constant,D,Z,R,ZR	WORD	Command axis (1 ~ 4 : axis1 ~ axis4)
	OP3	Deceleration time	PMLK,constant,D,Z,R,ZR	WORD	deceleration time (0 ~ 2,147,483,647 ms)

※ PMLK means P, M, L and K areas.

(a) Deceleration stop carry out the command in deceleration, acceleration and equal speed areas.

(b) Deceleration time means the time required from deceleration start to stop and it is available to set from 0 ~ 2,147,483,647ms. But if setting as “0”, it stops only by deceleration time set at the beginning of operation.

(c) Deceleration time means the time required from the speed limit of basic parameter on operation axis to stop.

(d) If deceleration stop command is executed in speed sync., position sync. or CAM operation, it stops speed sync., position sync. or CAM operation depending on current operation control state.

(e) D device signal (axis1 Signal in Operation, etc) which used in the example above is an assumption that saving the axis state value in D device area with XSRD command.

6.3.12 Skip Operation (Command : XSKP)

(1) Program

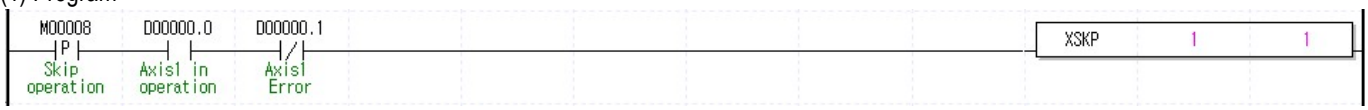

(2) Description

Device	Description
M0000B	axis1 skip operation input
D00000.0	axis1 signal in operation
D00000.1	axis1 error state

Command	SKP				Skip operation
Operand	OP1	Slot	Constant	WORD	Slot No. installed with APM module
	OP2	Axis	PMLK,constant,D,Z,R,ZR	WORD	Command axis (1 ~ 4 : axis1 ~ axis4)

※ PMLK means P, M, L and K areas.

(a) This ends and stops the operation of step which is in operation currently and then continues to operate the next step.

(b) For the details description of skip operation, refer to “9.5.3 Skip Operation.

(c) D device signal (axis1 Signal in Operation, etc) which used in the example above is an assumption that saving the axis state value in D device area with XSRD command.

6.3.13 Synchronous Start by Position (Command : XSSP)

(1) Program

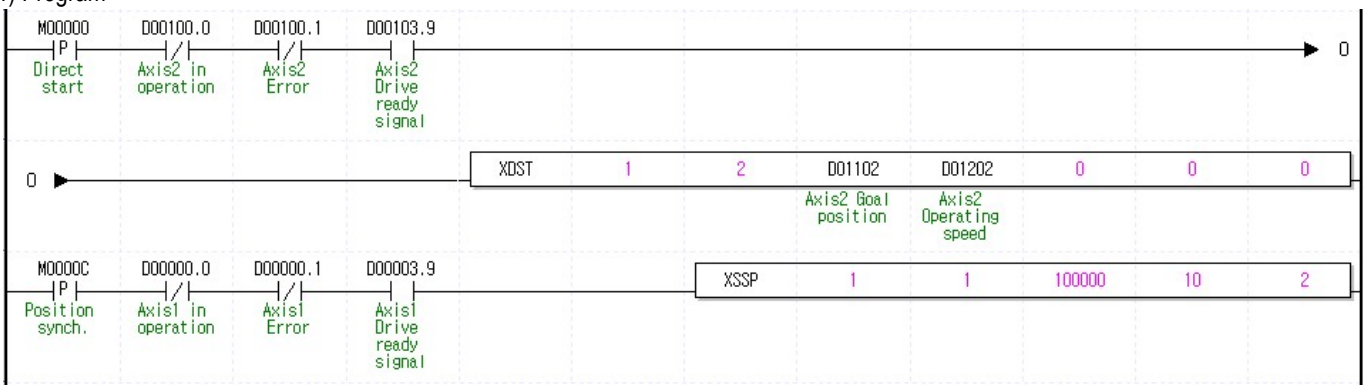

(2) Description

Device	Description
M0000C	axis1 synchronous start by position input
M0000D	axis1 direct start input
D00000.0	axis1 signal in operation
D00000.1	axis1 error signal
D00003.9	axis1 drive ready signal
D00100.0	axis2 signal in operation
D00100.1	axis2 error state
D00103.9	axis2 drive ready signal

Command	XSSP				Synchronous start by position
Operand	OP1	Slot	Constant	WORD	Slot No. installed with APM module
	OP2	Axis	PMLK,constant,D,Z,R,ZR	WORD	Command axis (1 ~ 4 : axis1 ~ axis4)
	OP3	Main axis position	PMLK,constant,D,Z,R,ZR	DINT	Position of sub axis to operate
	OP4	Operation step	PMLK,constant,D,Z,R,ZR	WORD	Sub axis operation step No. (0~ 400)
	OP5	Main axis	PMLK,constant,D,Z,R,ZR	WORD	Main axis (1 ~ 4 : axis1 ~ axis4, 9 : Encoder1)

※ PMLK means P, M, L and K areas.

(a) If the command of synchronous start by position is executed, it becomes in operation state but motor does not operate actually. At the point that axis2 as main axis setting starts and its current position is 1000, axis1 will start and the motor will operate.

(b) For the detail description about position synchronous start, refer to “9.4.2 position synchronous start control”

(c) D device signal (axis1 Signal in Operation, etc) which used in the example above is an assumption that saving the axis state value in D device area with XSRD command.

6.3.14 Synchronous Start by Speed (Command : XSSS)

(1) Program

(2) Description

Device	Description
M0000E	axis1 speed synchronous start input
M0000D	axis2 direct start input
D00000.0	axis1 signal in operation
D00000.1	axis1 error state
D00003.9	axis1 drive ready signal
D00100.0	axis2 signal in operation
D00100.1	axis2 error state
D00103.9	axis2 drive ready signal

Command	XSSS				Synchronous start by speed
Operand	OP1	Slot	Constant	WORD	Slot No. installed with APM module
	OP2	Axis	PMLK,constant,D,Z,R,ZR	WORD	Command axis (1 ~ 4 : axis1 ~ axis4)
	OP3	Main axis ratio	PMLK,constant,D,Z,R,ZR	WORD	Speed sync. main axis ratio (-32768 ~ 32767)
	OP4	Subordinate axis ratio	PMLK,constant,D,Z,R,ZR	WORD	Speed sync. sub axis ratio (-32768 ~ 32767)
	OP5	Main axis	PMLK,constant,D,Z,R,ZR	WORD	Main axis(1 ~ 4 : axis1 ~ axis4, 9 : Encoder)

※ PMLK means P, M, L and K areas.

(a) In the example program above, if the command of synchronous start by speed is executed, axis1 (subordinate axis) is indicated as 'in operation' but the motor does not operate. If operating axis2 set as the main axis, axis1 (subordinate axis) is operated depending on the designated ratio between main axis (OP3) and sub axis(OP4).

(b) If speed sync. ratio (sub axis ratio / main axis ratio) is positive integer, sub axis operation turns main axis direction, if not positive integer, it turns the opposite of main axis direction.

(c) For example, if main axis ratio is 3, sub axis ratio is 2, when main axis moves by 3000, sub axis moves 2000.

(d) For the detail description about speed sync., refer to "9.4.1 Speed Synchronous Start Control".

(e) D device signal (axis1 Signal in Operation, etc) which used in the example above is an assumption that saving the axis state value in D device area with XSRD command.

6.3.15 Speed synchronous start by position (Command: XSSSP)

(1) Program

(2) Description

Device	Description
M00040	axis1 speed synchronous start input by position
M0000D	axis2 direct start input
D00000.0	axis1 signal in operation
D00000.1	axis1 error state
D00003.9	axis1 drive ready signal
D00100.0	axis2 signal in operation
D00100.1	axis2 error state
D00103.9	axis2 drive ready signal

Command	XSSSP				Speed synchronous start by position
Operand	OP1	Slot	Constant	WORD	Slot no. installed with APM module
	OP2	Axis	PMLK,constant,D,Z,R,ZR	WORD	Command axis (1 ~ 4 : axis1 ~ axis4)
	OP3	Main axis ratio	PMLK,constant,D,Z,R,ZR	INT	Speed sync. main axis ratio (-32768 ~ 32767)
	OP4	Sub axis ratio	PMLK,constant,D,Z,R,ZR	INT	Speed sync. sub axis ratio (-32768 ~ 32767)
	OP5	Main axis	PMLK,constant,D,Z,R,ZR	WORD	Main axis (1 ~ 4 : axis1 ~ axis4, 9 : Encoder)
	OP6	Target position	PMLK,constant,D,Z,R,ZR	DINT	Target position of Speed synchronous start with position

※ PMLK means P area, M area, L area, K area.

(a) In the example program above, if the command of synchronous start by speed is executed, axis1 (subordinate axis) is indicated as 'in operation' but the motor does not operate. If operating axis2 set as the main axis, axis1 (subordinate axis) is operated depending on the designated ratio between main axis (OP3) and sub axis(OP4).

(b) If speed sync. ratio (sub axis ratio / main axis ratio) is positive integer, sub axis operation turns main axis direction, if not positive integer, it turns the opposite of main axis direction.

(c) For example, if main axis ratio is 3, sub axis ratio is 2 and target position is 1,000,000, when main axis moves by 3000, sub axis moves 2000. It stops by where position of main axis is at 1,000,000.

(d) For the detail description about speed sync., refer to "9.4.1 Speed Synchronous Start Control".

(e) D device signal (axis1 Signal in Operation, etc) which used in the example above is an assumption that saving the axis state value in D device area with XSRD command.

6.3.16 CAM Operation (Command : XCAM)

(1) Program

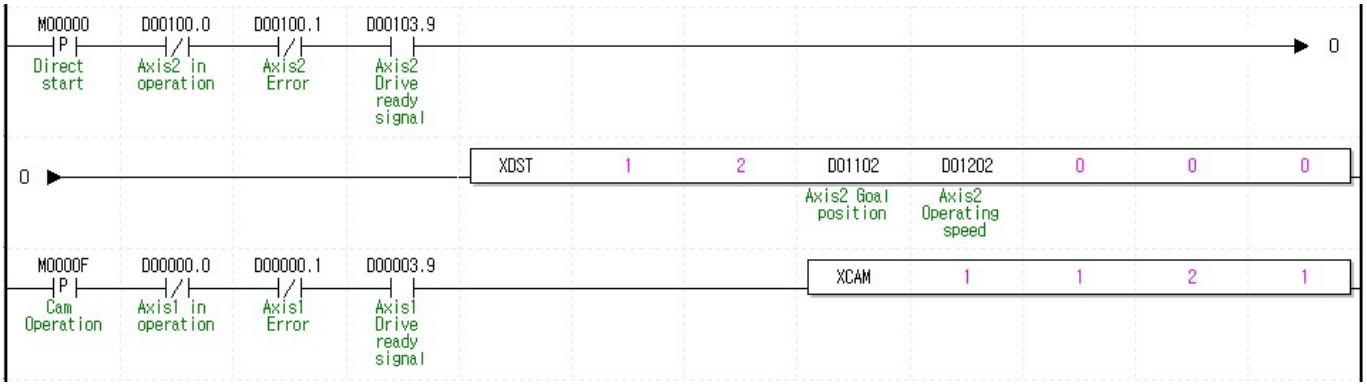

(2) Description

Device	Description
M0000F	axis1 cam operation input
M0000D	axis1 direct start input
D00000.0	axis1 signal in operation
D00000.1	axis1 error state
D00003.9	axis1 drive ready signal
D00100.0	axis2 signal in operation
D00100.1	axis2 error state
D00103.9	axis2 drive ready signal

Command	POR				Cam Operation
Operand	OP1	Slot	Constant	WORD	Slot No. installed with APM module
	OP2	Axis	PMLK,constant,D,Z,R,ZR	WORD	Command axis (1 ~ 4 : axis1 ~ axis4)
	OP3	Main axis	PMLK,constant,D,Z,R,ZR	WORD	Main axis (1 ~ 4 : axis1 ~ axis4, 9 : Encoder)
	OP4	Cam Block	PMLK,constant,D,Z,R,ZR	WORD	Cam data block to apply to operation (1 ~ 9)

※ PMLK means P, M, L and K areas.

(a) In the example program above, if cam operation command is executed, axis1 (sub axis) is indicated as “In operation” but the motor does not operate actually. When axis2 starts operating as a main axis, motor of axis1 starts operating toward sub axis location depending on data which set on cam block (OP4).

(b) Maximum number of cam data block is 8. (Set on positioning package)

(c) Cam data is set on positioning package but has to be downloaded at positioning module before cam operation.

(d) For the detail description about cam operation, refer to “9.4.3 Cam Operation (XCAM).

(e) D device signal (axis1 Signal in Operation, etc) which used in the example above is an assumption that saving the axis state value in D device area with XSRD command.

(f) In order to use user CAM operation, you have to set CAM block number 9.

(g) For detail information on user CAM operation, refer to “9.4.4 user CAM operation”.

6.3.17 Main axis offset-designated CAM Operation (Command : XCAMO)

(1) Program

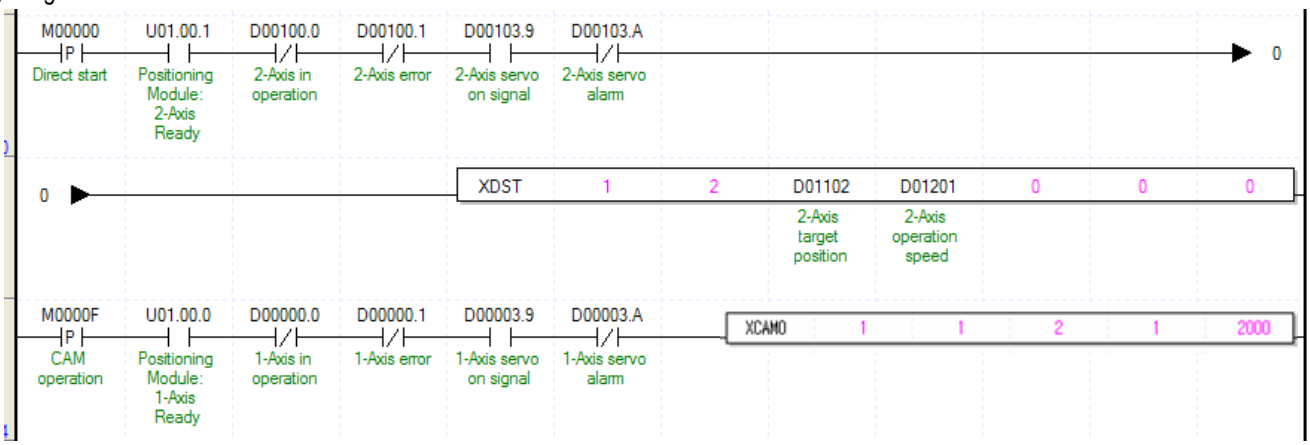

(2) Description

Device	Description
M0000F	axis1 cam operation input
M0000D	axis1 direct start input
U01.00.0	axis1 ready
U01.00.1	axis2 ready
D00000.0	axis1 in operation
D00000.1	axis1 error state
D00003.9	axis1 servo on signal
D00003.A	axis1 servo error
D00100.0	axis2 in operation
D00100.1	axis2 error state
D00103.9	axis2 servo on signal
D00103.A	axis2 servo error

Command	XCAMO				Cam Operation
Operand	OP1	Slot	Constant	WORD	Slot No. installed with positioning module
	OP2	Axis	PMLK,constant,D,Z,R,ZR	WORD	Command axis (1 ~ 8 : axis1 ~ axis8)
	OP3	Main axis	PMLK,constant,D,Z,R,ZR	WORD	Main axis (1 ~ 8 : axis1 ~ axis8, 9 : Encoder1, 10:Encoder2)
	OP4	Cam Block	PMLK,constant,D,Z,R,ZR	WORD	Cam data block to apply to operation (1 ~ 9)
	OP5	Main axis offset	PMLK,constant,D,Z,R,ZR	DINT	Main axis position to start CAM operation

※ PMLK means P, M, L and K areas.

(a) In the example program above, if cam operation command is executed, axis1 (sub axis) is indicated as “In operation” but the motor does not operate actually. When axis2 starts operating as a main axis and transfer amount becomes 2000, motor of axis1 starts operating toward sub axis location depending on data which set on cam block (OP4).

(b) Maximum number of cam data block is 8. (Set on positioning package)

(c) Cam data is set on positioning package but has to be downloaded at positioning module before cam operation.

(d) For the detail description about cam operation, refer to “9.4.3 Cam Operation (XCAM).

(e) D device signal (axis1 in Operation, etc) which used in the example above is an assumption that saving the axis state value in D device area with XSRD command.

(f) In order to use user CAM operation, you have to set CAM block number as 9.

(g) For detailed information on user CAM operation, refer to “9.4.4. user CAM operation”.

6.3.18 Position Override (Command : XPOR)

(1) Program

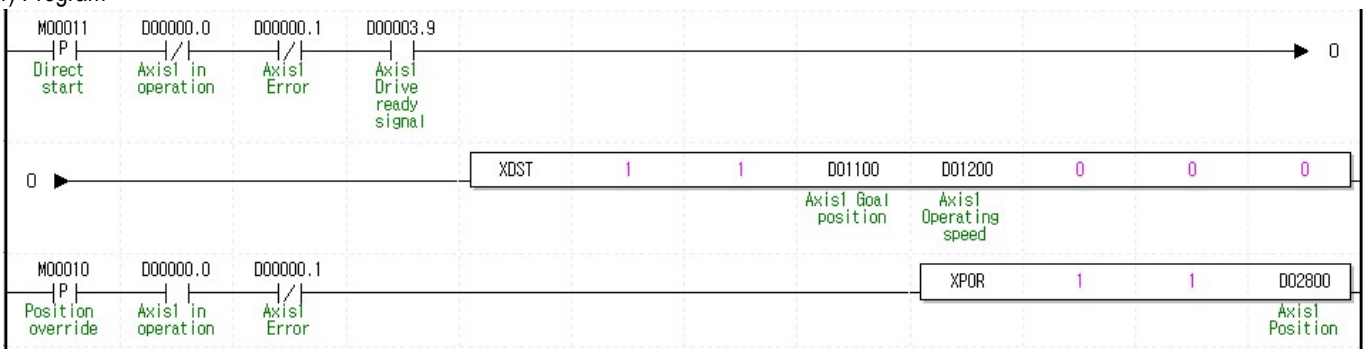

(2) Description

Device	Description
M00010	axis1 position override input
M00011	axis1 direct start input
D00000.0	axis1 signal in operation
D00000.1	axis1 error state
D00003.9	axis1 drive ready signal
D01100	Goal position value
D02800	Position override value

Command	XPOR				Position override
Operand	OP1	Slot	Constant	WORD	Slot No. installed with APM module
	OP2	Axis	PMLK,constant,D,Z,R,ZR	WORD	Command axis (1 ~ 4 : axis1 ~ axis4)
	OP3	Position value	PMLK,constant,D,Z,R,ZR	DINT	Goal position value to change (Absolute coordinate)

※ PMLK means P, M, L and K areas.

(a) If position override is executed before reaching goal position, goal position shall be changed with 20000 for positioning operation. If executing positioning position override after passing a position to execute position override, it stops at the current position.

(b) Position override set on position override value is absolute coordinate position.

(c) For the detail description about position override, refer to “9.5.4 Position Override”.

(d) D device signal (axis1 Signal in Operation, etc) which used in the example above is an assumption that saving the axis state value in D device area with XSRD command.

6.3.19 Speed Override (Command : XSOR)

(1) Program

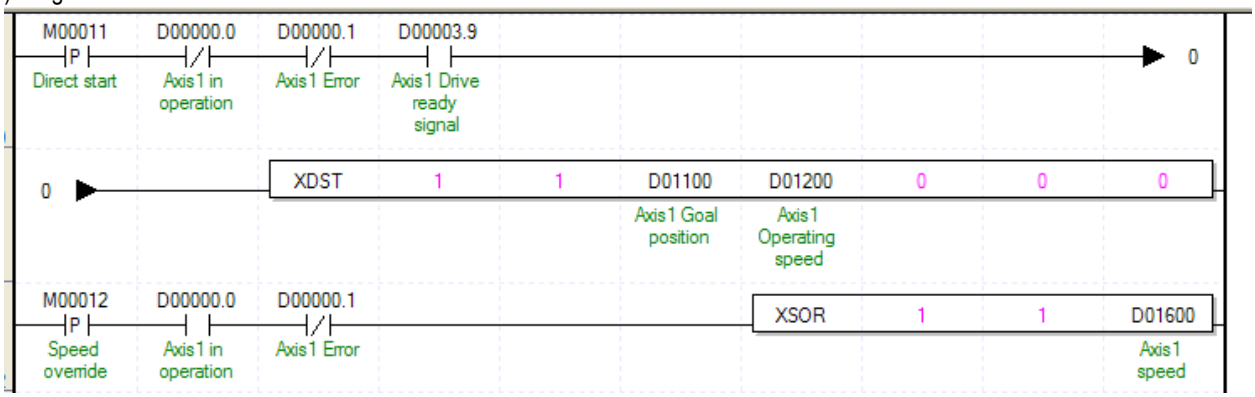

(2) Description

Device	Description
M00012	axis1 speed override input
M00011	axis1 direct start input
D00000.0	axis1 signal in operation
D00000.1	axis1 error state
D00003.9	axis1 drive ready signal
D01200	Goal speed value
D01600	Speed override value

Command	SOR				Speed override
Operand	OP1	Slot	Constant	WORD	Slot No. installed with APM module
	OP2	Axis	PMLK,constant,D,Z,R,ZR	WORD	Command axis (1 ~ 4 : axis1 ~ axis4)
	OP3	Speed value	PMLK,constant,D,Z,R,ZR	DWORD	Goal speed value to change

※ PMLK means P, M, L and K areas.

(a) Speed override value (OP3) will be set as “% ” or “Speed value” depending on the value which set on “speed override” in common parameter.

(b) If unit of speed override value is %, the setting area is from 1 to 65,535, it means 0.01% ~ 655.35%.

(c) If unit of speed override value is speed value, setting area is from 1 to speed limit value. The speed limit value is set on “Speed limit value” of basic parameter and unit of speed override value depends on unit of axis.

(d) For the detail description about speed override operation, refer to “9.5.5 Speed Override”.

(d) D device signal (axis1 Signal in Operation, etc) which used in the example above is an assumption that saving the axis state value in D device area with XSRD command.

6.3.20 Position Assigned Speed Override (Command : XPSO)

(1) Program

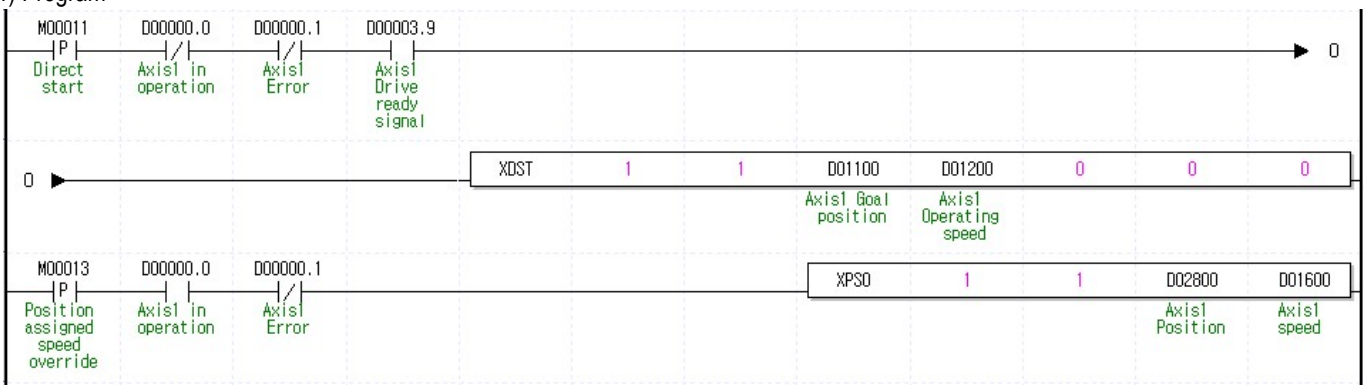

(2) Description

Device	Description
M00013	axis1 position assigned speed override input
M00011	axis1 direct start input
D00000.0	axis1 signal in operation
D00000.1	axis1 error state
D00003.9	axis1 drive ready signal
D01200	Goal speed value
D01600	Speed override value
D02800	Position value to execute speed change

Command	XPSO				Position assigned speed override
Operand	OP1	Slot	Constant	WORD	Slot No. installed with APM module
	OP2	Axis	PMLK,constant,D,Z,R,ZR	WORD	Command axis (1 ~ 4 : axis1 ~ axis4)
	OP3	Position value	PMLK,constant,D,Z,R,ZR	DINT	Position value to change the speed
	OP4	Speed value	PMLK,constant,D,Z,R,ZR	DWORD	Goal speed value to change

※ PMLK means P, M, L and K areas.

(a) Speed override value (OP3) will be set as “% ” or “Speed value” depending on the value which set on “speed override” in common parameter.

(b) If unit of speed override value is %, the setting area is from 1 to 65,535, it means 0.01% ~ 655.35%.

(c) If unit of speed override value is speed value, setting area is from 1 to speed limit value. The speed limit value is set on “Speed limit value” of basic parameter and unit of speed override value depends on unit of axis.

(d) In the example program above, axis1 position assigned speed override input(M00013) become “on” to execute position assigned speed override after axis1 direct start input (M00011) become “on”. When the position of axis1 is located at the position where set at D02800, the speed will be changed to the value set at D01600.

(e) For the detail description about position assigned speed override operation, refer to “9.5.6 Position Assigned Speed Override”.

(f) D device signal (axis1 Signal in Operation, etc) which used in the example above is an assumption that saving the axis state value in D device area with XSRD command.

6.3.21 Continuous Operation (Command : XNMV)

(1) Program

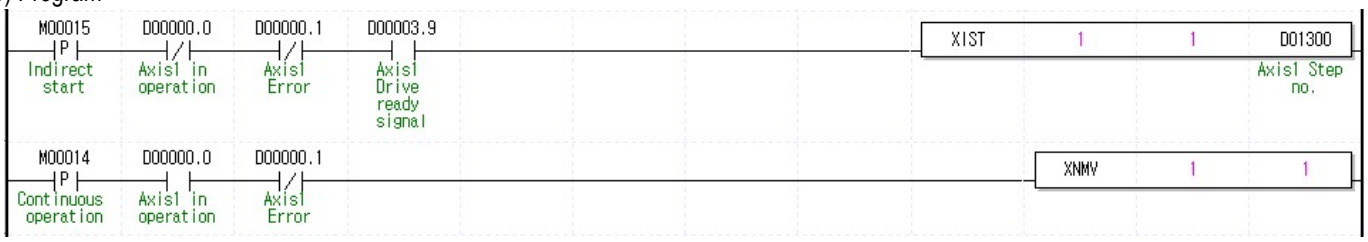

(2) Description

Device	Description
M00014	axis1 continuous operation input
M00015	axis1 indirect start input
D00000.0	axis1 signal in operation
D00000.1	axis1 error state
D00003.9	axis1 drive ready signal
D01300	1axus operation step

Command	XNMV				Continuous operation
Operand	OP1	Slot	Constant	WORD	Slot No. installed with APM module
	OP2	Axis	PMLK,constant,D,Z,R,ZR	WORD	Command axis (1 ~ 4 : axis1 ~ axis4)

※ PMLK means P, M, L and K areas.

(a) If continuous operation command is executed, the step No. is changed from the step in current operation to the next step No. and continues positioning operation to the speed of the next step and goal position. Connection with the next step is executed by continuous operation pattern.

(b) Continuous operation command changes the only current operation pattern in operation, not the operation data.

(c) For the detail description about continuous operation, refer to “9.5.2 Continuous Operation”.

(d) D device signal (axis1 Signal in Operation, etc) which used in the example above is an assumption that saving the axis state value in D device area with XSRD command.

6.3.22 Inching Operation (Command : XINCH)

(1) Program

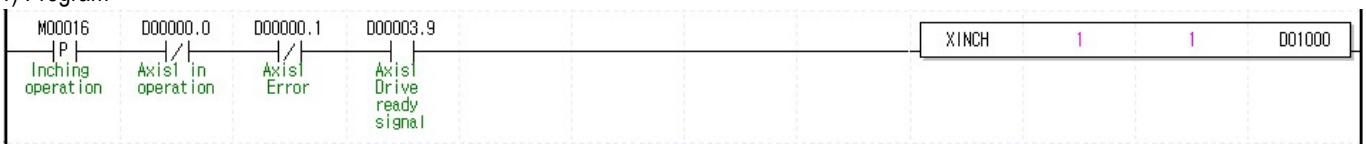

(2) Description

Device	Description
M00016	axis1 inching operation input
D00000.0	axis1 signal in operation
D00000.1	axis1 error state
D00003.9	axis1 drive ready signal
D01000	axis1 inching value

Command	XINCH				Inching operation
Operand	OP1	Slot	Constant	WORD	Slot No. installed with APM module
	OP2	Axis	PMLK,constant,D,Z,R,ZR	WORD	Command axis (1 ~ 4 : axis1 ~ axis4)
	OP3	Position value	PMLK,constant,D,Z,R,ZR	DINT	Position value to move for inching operation

※ PMLK means P, M, L and K areas.

(a) It carries out the relative coordinate operation by inching operation speed set in manual operation parameter as much as position value (OP3).

(b) For the detail description about inching operation, refer to “9.3.2 Inching Operation”.

(c) D device signal (axis1 Signal in Operation, etc) which used in the example above is an assumption that saving the axis state value in D device area with XSRD command.

6.3.23 Return to the Previous Manual Operation Position (Command : XRTP)

(1) Program

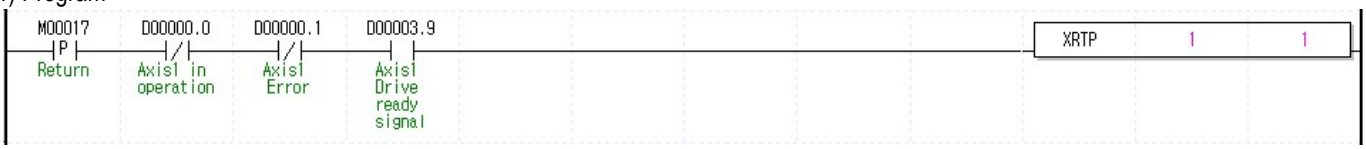

(2) Description

Device	Description
M00017	axis1 return to the previous manual operation position start input
D00000.0	axis1 signal in operation
D00000.1	axis1 error state
D00003.9	axis1 drive ready signal

Command	RTP				Return to the previous manual operation position
Operand	OP1	Slot	Constant	WORD	Slot No. installed with APM module
	OP2	Axis	PMLK,constant,D,Z,R,ZR	WORD	Command axis (1 ~ 4 : axis1 ~ axis4)

※ PMLK means P, M, L and K areas.

(a) If the current position is changed as external axis speed sync. operation, inching operation, Jog operation after completing the positioning, it returns to the previous position of manual operation.

(b) Return to the previous position of manual operation command will be ignored if it is not in manual operation.

(c) The detail description about return to the previous position of manual operation, refer to “9.3.3 Return to the Previous Position of Manual Operation”

(d) D device signal (axis1 Signal in Operation, etc) which used in the example above is an assumption that saving the axis state value in D device area with XSRD command.

6.3.24 Start Step No. Change (Command : XSNS)

(1) Program

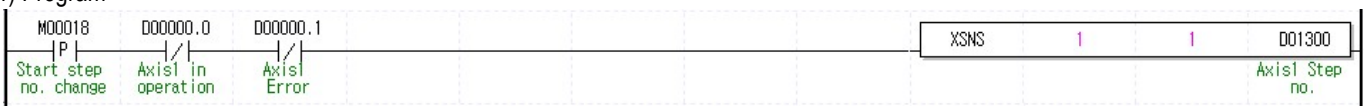

(2) Description

Device	Description
M00018	axis1 start step No. change input
D00000.0	axis1 signal in operation
D00000.1	axis1 error state
D01300	axis1 start step no. to change

Command	XSNS				Start step No. change
Operand	OP1	Slot	Constant	WORD	Slot No. installed with APM module
	OP2	Axis	PMLK,constant,D,Z,R,ZR	WORD	Command axis (1 ~ 4 : axis1 ~ axis4)
	OP3	Step No.	PMLK,constant,D,Z,R,ZR	WORD	step No. to change with start step (1~400)

※ PMLK means P, M, L and K areas.

(a) Change the current step into the step value which set on step no.(OP3)

(b) It is not available to be executed in operation.

(c) D device signal (axis1 Signal in Operation, etc) which used in the example above is an assumption that saving the axis state value in D device area with XSRD command.

6.3.25 Repeat Step No. Change (Command : XSRS)

(1) Program

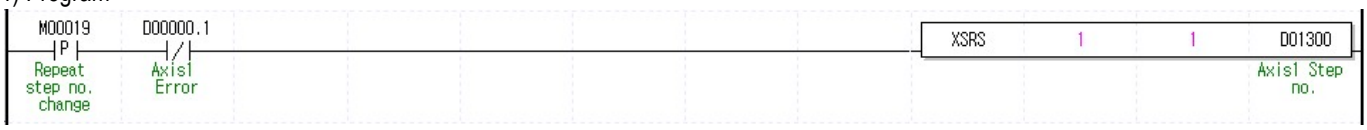

(2) Description

Device	Description
M00019	axis1 start step No. change input
D00000.1	axis1 error state
D01300	axis1 repeat step no. to change

Command	XSRS				Repeat step No. change
Operand	OP1	Slot	Constant	WORD	Slot No. installed with APM module
	OP2	Axis	PMLK,constant,D,Z,R,ZR	WORD	Command axis (1 ~ 4 : axis1 ~ axis4)
	OP3	Step No.	PMLK,constant,D,Z,R,ZR	WORD	step No. to change into repeat step (0~400)

※ PMLK means P, M, L and K areas.

(a) Change repeat step into the step value which set on step no.(OP3).

(b) Repeat step No. change is available for command execution even during positioning operation.

(c) Set the next step after finish operating designated repeat step.

(d) The detail description about “9.5.10 Repeat Operation Step no. Change”.

(e) D device signal (axis1 Signal in Operation, etc) which used in the example above is an assumption that saving the axis state value in D device area with XSRD command.

6.3.26 M code Release (Command : XMOF)

(1) Program

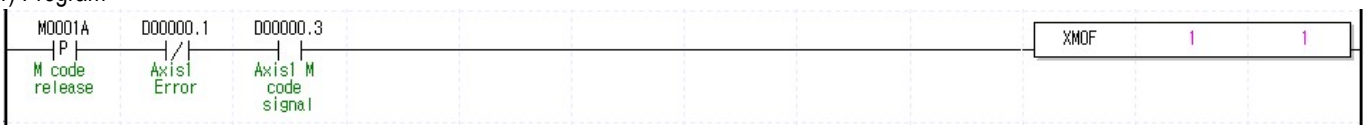

(2) Description

Device	Description
M0001A	axis1 M code release input
D00000.1	axis1 error state
D00000.3	axis1 M code signal

Command	MOF				M code release
Operand	OP1	Slot	Constant	WORD	Slot No. installed with APM module
	OP2	Axis	PMLK,constant,D,Z,R,ZR	WORD	Command axis (1 ~ 4 : axis1 ~ axis4)

※ PMLK means P, M, L and K areas.

(a) When M code occurs, M code signal and M code No. are released at the same time (M code and M code No. are changed to OFF and 0, respectively).

(b) It is available to be executed in operation.

(c) D device signal (axis1 Signal in Operation, etc) which used in the example above is an assumption that saving the axis state value in D device area with XSRD command.

6.3.27 Current Position Preset (Command : XPRS)

(1) Program

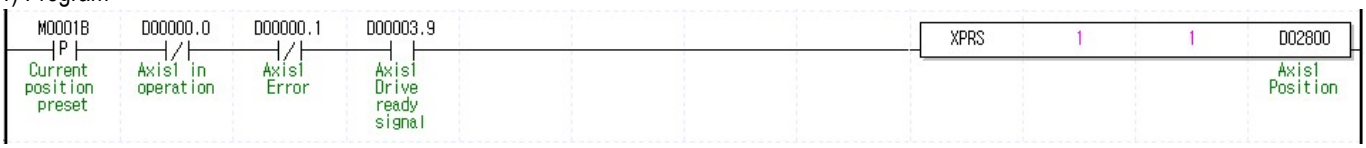

(2) Description

Device	Description
M0001B	axis1 current position preset input
D00000.0	axis1 signal in operation
D00000.1	axis1 error state
D00003.9	axis1 drive ready signal
D02800	axis1 preset position value

Command	XPRS				Current position preset
Operand	OP1	Slot	Constant	WORD	Slot No. installed with APM module
	OP2	Axis	PMLK,constant,D,Z,R,ZR	WORD	Command axis (1 ~ 4 : axis1 ~ axis4)
	OP3	Position value	PMLK,constant,D,Z,R,ZR	DINT	Current position value to change

※ PMLK means P, M, L and K areas.

(a) The command that change the current position value to the designated position (OP3).

(b) If current position preset command is executed in the origin unsettled state, positioning state signal (bit) is ON and the current position is changed by setting value (OP3).

(c) D device signal (axis1 Signal in Operation, etc) which used in the example above is an assumption that saving the axis state value in D device area with XSRD command.

6.3.28 Encoder Preset (Command : XEPRS)

(1) Program

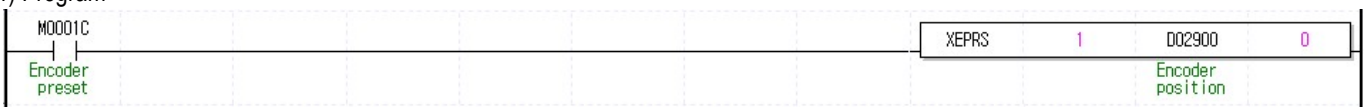

(2) Description

Device	Description
M0001C	axis1 encoder preset input
D02900	axis1 encoder preset position value

Command	XEPRS				Encoder preset
Operand	OP1	Slot	Constant	WORD	Slot No. installed with APM module
	OP2	Position value	PMLK,constant,D,Z,R,ZR	DINT	Current position value to change
	OP3	Encoder	PMLK,constant,D,Z,R,ZR	WORD	Encoder to change (XPM is always 0)

※ PMLK means P, M, L and K areas.

(a) This is the command that changes the current position to the designated position.

(b) Encoder selection has to be set by 0.

6.3.29 Teaching Array (Command : XTEAA)

(1) Program

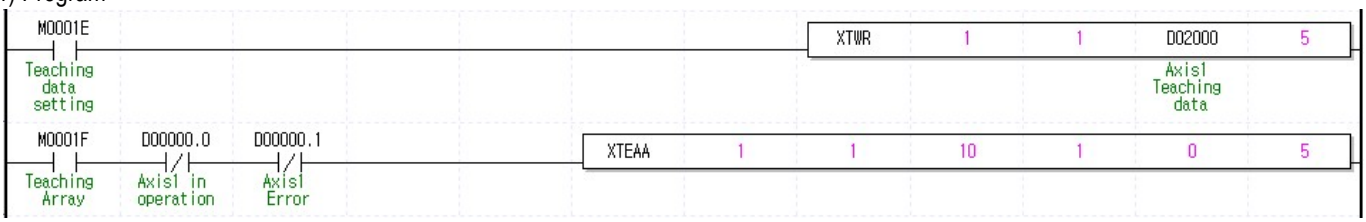

(2) Description

Device	Description
M0001E	axis1 teaching data setting input
M0001F	axis1 teaching array input
D00000.0	axis1 signal in operation
D00000.1	axis1 error state
D02000	axis1 teaching array data leading address

Command	XTEAA				Teaching Array
Operand	OP1	Slot	Constant	WORD	Slot No. installed with APM module
	OP2	Axis	PMLK,constant,D,Z,R,ZR	WORD	Command axis (1 ~ 4 : axis1 ~ axis4)
	OP3	Teaching step	PMLK,constant,D,Z,R,ZR	WORD	leading step No. for teaching (0~400)
	OP4	Teaching method	PMLK,constant,D,Z,R,ZR	WORD	0:RAM Teaching, 1:ROM Teaching
	OP5	Teaching item	PMLK,constant,D,Z,R,ZR	WORD	0:Position teaching 1:Speed teaching
	OP6	Number of Teaching	PMLK,constant,D,Z,R,ZR	WORD	Number of step for Teaching (1~16)

※ PMLK means P, M, L and K areas.

(a) This is the command that change the goal position or goal speed (OP5) among the operation data to the number as many as from the designated step (OP3) to the number of teaching (OP6). In the case of operating RAM teaching according to the teaching method (OP3), the changed value is maintained during APM is connected to power. In the case of operating ROM teaching, it is maintained without power connection of APM.

(b) Teaching Array command is available to be executed when the axis is operating. But teaching data of operating step do not apply instantly. Operating step data will apply end of present step operation.

(c) The number of times for ROM teaching is not limited because operation data of APM is saved on FRAM.

(d) Before executing teaching array, teaching data should be set in the teaching array setting area. For teaching array data setting, refer to TWR command.

(e) In the example program above, execute ROM teaching for position data between no.10 step and no.14 step of axis1 operation data using 5 axis1 teaching data.

(f) D device signal (axis1 Signal in Operation, etc) which used in the example above is an assumption that saving the axis state value in D device area with XSRD command.

6.3.30 Teaching Array Data Setting (Command: XTWR)

(1) Program

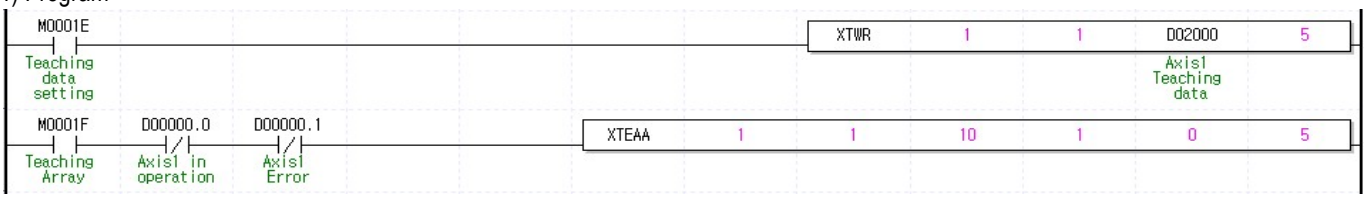

(2) Description

Device	Description
M0001E	axis1 Teaching array data setting input
M0001F	axis1 Teaching array input
D00000.0	axis1 signal in operation
D00000.1	axis1 error state
D02000	axis1 Teaching array data leading address

Command	XTWR				Teaching Array Data Setting
Operand	OP1	Slot	Constant	WORD	Slot No. installed with APM module
	OP2	Axis	PMLK,constant,D,Z,R,ZR	WORD	Command axis (1 ~ 4 : axis1 ~ axis4)
	OP3	Device	PMLK,D,Z,R,ZR	WORD	Leading device No. with teaching array data
	OP3	Number of data	PMLK,constant,D,Z,R,ZR	WORD	Number of data to save

※ PMLK means P, M, L and K areas.

(a) Teaching data must be set in teaching array data setting area before teaching array is executed.

(b) Teaching array is not executed only by executing teaching array data setting command. Please refer to teaching array command (TEAA).

(c) In the example program above, execute ROM teaching for position data between no.10 step and no.14 step of axis1 operation data using 5 axis1 teaching data.

(d) According to the leading No. of device, the data are set in teaching array data area as follows.

No.	Device NO.	Teaching array data
1	Device + 0	Teaching array data 1
2	Device + 2	Teaching array data 2
3	Device + 4	Teaching array data 3
4	Device + 6	Teaching array data 4
5	Device + 8	Teaching array data 5
6	Device + 10	Teaching array data 6
7	Device + 12	Teaching array data 7
8	Device + 14	Teaching array data 8
9	Device + 16	Teaching array data 9
10	Device + 18	Teaching array data 10
11	Device + 20	Teaching array data 11
12	Device + 22	Teaching array data 12
13	Device + 24	Teaching array data 13
14	Device + 26	Teaching array data 14
15	Device + 28	Teaching array data 15
16	Device + 30	Teaching array data 16

(e) Teaching array data can be set by using PUT command. For this, refer to memory address of “5.1.2 Teaching data” and “6.1.2 Internal Memory Writing”. If use PUT command in the example program above, it displayed like the picture below.

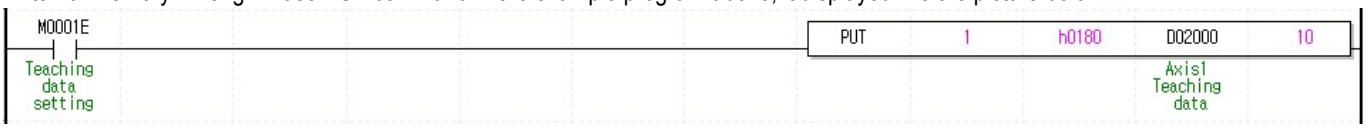

(f) D device signal (axis1 Signal in Operation, etc) which used in the example above is an assumption that saving the axis state value in D device area with XSRD command.

6.3.31 Basic Parameter Teaching (Command : XSBP)

(1) Program

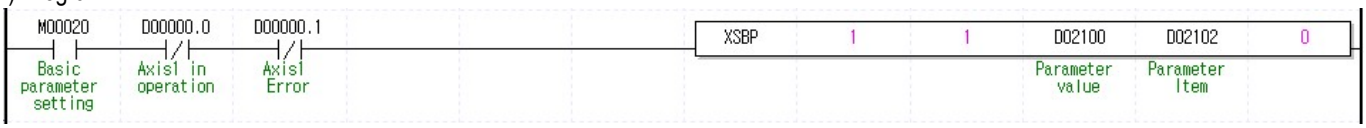

(2) Description

Device	Description
M00020	axis1 basic parameter setting input
D00000.0	axis1 signal in operation
D00000.1	axis1 error state
D02100	Parameter value
D02102	Parameter items

Command	XSBP				Basic parameter Teaching
Operand	OP1	Slot	Constant	WORD	Slot No. installed with APM module
	OP2	Axis	PMLK,constant,D,Z,R,ZR	WORD	Command axis(1 ~ 4 : axis1 ~ axis4)
	OP3	Parameter value	PMLK,constant,D,Z,R,ZR	DWORD	Parameter value to change
	OP4	Parameter item	PMLK,constant,D,Z,R,ZR	WORD	Parameter item to change (1~17)
	OP5	Setting method	PMLK,constant,D,Z,R,ZR	WORD	0: RAM setting, 1: ROM setting

※ PMLK means P, M, L and K areas.

(a) This is the command that changes the value of the item (OP4) which already set among basic parameter items to setting value (OP3). In the case of RAM setting by the setting method (OP5), the changed value is maintained during APM module is being connected to power. In the case of ROM setting, it is maintained without the power connection of APM module.

(b) The number of ROM setting operating is unlimited because basic parameter of APM module is saved on FRAM.

(c) Basic parameter setting command is unavailable to be executed when the axis is operating.

(d) Basic parameter items

Setting Value	Items	Setting Range
1	Speed limit value	mm : 1 ～ 2,147,483,647 [X10^{-2} ㎜/min] Inch : 1 ～ 2,147,483,647 [X10^{-3}Inch/min] degree : 1 ～ 2,147,483,647 [X10^{-3} degree/min] pulse : 1 ～ 2,147,483,647 [pulse/sec]
2	Acc. Time 1	1 ~ 2,147,483,647 [ms]
3	Acc. Time 2	
4	Acc. Time 3	
5	Acc. Time 4	
6	Dec. Time 1	1 ~ 2,147,483,647 [ms]
7	Dec. Time 2	
8	Dec. Time 3	
9	Dec. Time 4	
10	Sudden Stop Dec. Time	1 ~ 2,147,483,647 [ms]
11	Dividing output pulse/rotation	1 ~ 200,000,000
12	Travel distance/rotation	
13	Unit	0:Pulse, 1:mm, 2:Inch, 3:Degree
14	Unit allocation	0: x 1, 1: x 10, 2: x 100, 3: x 1000
15	Speed command unit	0: Unit/Time, 1: rpm
16	Bias Speed	1 ~ Speed limit value
17	Pulse output mode	0: CW/CCW, 1: PLS/DIR, 2: PHASE

(e) For the change value (OP3) setting range of each basic parameter item (OP4) which already set, refer to “4.1.1 Basic Parameter Content”

(f) In the example program above, it changes the item that saved on D02102 of axis1 basic parameter to the value that saved on D02100 using RAM setting method. In the case of D02102=10, D02100=100, it sets sudden stop time as “100ms” using RAM setting method.

(g) D device signal (axis1 Signal in Operation, etc) which used in the example above is an assumption that saving the axis state value in D device area with XSRD command.

6.3.32 Extended Parameter Setting (Command : XSEP)

(1) Program

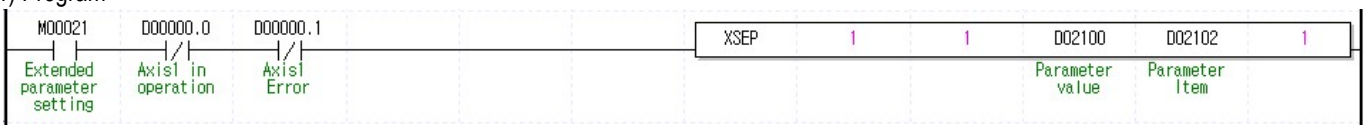

(2) Description

Device	Description
M00021	axis1 extended parameter setting input
D00000.0	axis1 signal in operation
D00000.1	axis1 error state
D02100	Parameter value
D02102	Parameter items

Command	TEP				Extended parameter Teaching
Operand	OP1	Slot	Constant	WORD	Slot No. installed with APM module
	OP2	Axis	PMLK,constant,D,Z,R,ZR	WORD	Command axis (1 ~ 4 : axis1 ~ axis4)
	OP3	Parameter value	PMLK,constant,D,Z,R,ZR	DINT	Parameter value to change
	OP4	Parameter item	PMLK,constant,D,Z,R,ZR	WORD	Parameter item to change (1~21)
	OP5	Setting Method	PMLK,constant,D,Z,R,ZR	WORD	0: RAM setting, 1: ROM setting

※ PMLK means P, M, L and K areas.

(a) This is the command that changes the value of the item (OP4) which already set among basic parameter items to setting value (OP3). In the case of RAM setting by the setting method (OP5), the changed value is maintained during APM module is being connected to power. In the case of ROM setting, it is maintained without the power connection of APM module.

(b) The number of ROM setting operating is unlimited because basic parameter of APM module is saved on FRAM.

(c) Basic parameter setting command is unavailable to be executed when the axis is operating.

(d) Extended parameter items

Setting value	Items	Setting value
1	S/W high limit	㎜:-2147483648 ~ 2147483647[X10^{-4} ㎜] Inch:-2147483648 ~ 2147483647[X10^{-5}Inch] degree:-2147483648~2147483647[X10^{-5}degree] pulse:-2147483648 ~ 2147483647[pulse]
2	S/W low limit	
3	Backlash compensation amount	mm: 0 ~ 65,535[X10^{-4} ㎜] inch: 0 ~ 65,535[X10^{-5}Inch] degree: 0 ~ 65,535[X10^{-5}degree] pulse: 0 ~ 65,535[pulse]
4	Positioning complete time	0 ~ 65,535[ms]
5	S-Curve ratio	1 ~ 100
6	axis2 Linear interpolation continuous operation circular arc adding position	mm: 0 ~ 2147483647[X10^{-4} ㎜] Inch: 0 ~ 2147483647[X10^{-5}Inch] degree: 0 ~ 2147483647[X10^{-5}degree] pulse: 0 ~ 2147483647[pulse]
7	Acc./dec. pattern	0: Trapezoid operation, 1: S-Curve operation
8	M code mode	0: None, 1: With, 2: After
9	High&Low limit detection in speed control	0: Not detect, 1: Detect
10	Positioning complete condition	0: Dwell Time 1: In position 2: Dwell Time AND In position 3: Dwell Time OR In position
11	Interpolation continous operation positioning form	0: Goal position passage, 1: The neighborhood passage
12	axis2 Linear interpolation continuous operation circular arc adding	0: No circular arc addition, 1: Circular arc addition continuous operation.
13	External speed/position control switching	0: Prohibition, 1: Approval
14	External emergency stop/Acc.&Dec. stop selection	0: Emergency stop, 1: Dec. stop
15	Positioning speed override coordinate	0: Absolute coordinate, 1: Relative coordinate
16	Pulse output direction	0: CW, 1: CCW
17	Infinite running repeat position	mm: 1 ~ 2147483647[X10-4 ㎜] Inch: 1 ~ 2147483647[X10-5Inch] degree: 1 ~ 2147483647[X10-5degree] pulse: 1 ~ 2147483647[pulse]
18	Infinite running repeat	0: disable, 1: enable
19	Speed/position switching coordinate	0: Incremental, 1: Absolute
20	Interpolation speed selection	0: main axis speed 1: synthetic speed
21	Module output signal selection	0: Deviation counter clear, 1: Setting position output

(e) For the change value (OP3) setting range of each extended parameter item (OP4) which already set, refer to “4.2.1 Extended Parameter Content”

(f) In the example program above, it changes the item that saved on D02102 of axis1 basic parameter to the value that saved on D02100 using RAM setting method. In the case of D02102=8, D02100=1, it sets sudden stop time as “With” using RAM setting method.

(g) D device signal (axis1 Signal in Operation, etc) which used in the example above is an assumption that saving the axis state value in D device area with XSRD command.

6.3.33 Homing Parameter Teaching (Command : XSHP)

(1) Program

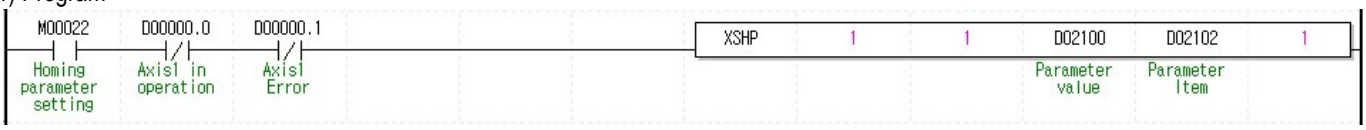

(2) Description

Device	Description
M00022	axis1 homing parameter teaching input
D00000.0	axis1 signal in operation
D00000.1	axis1 error state
D02100	Parameter value
D02102	Parameter Items

Command	XSHP				Homing parameter Teaching
Operand	OP1	Slot	Constant	WORD	Slot No. installed with APM module
	OP2	Axis	PMLK,constant,D,Z,R,ZR	WORD	Command axis (1 ~ 4 : axis1 ~ axis4)
	OP3	Parameter value	PMLK,constant,D,Z,R,ZR	DINT	Parameter value to change
	OP4	Parameter item	PMLK,constant,D,Z,R,ZR	WORD	Parameter items to change (1~10)
	OP5	Setting method	PMLK,constant,D,Z,R,ZR	WORD	0: RAM setting, 1: ROM setting

※ PMLK means P, M, L and K areas.

(a) This is the command that changes the value of the item (OP4) which already set among homing parameter items to setting value (OP3). In the case of RAM setting by the setting method (OP5), the changed value is maintained during APM module is being connected to power. In the case of ROM setting, it is maintained without the power connection of APM module.

(b) The number of ROM setting operating is unlimited because homing parameter of APM module is saved on FRAM.

(c) Homing parameter setting command is unavailable to be executed when the axis is operating.

(d) Homing parameter item is as follows.

Setting Value	Items	Setting value
1	Origin address	㎜ : -2147483648 ~ 2147483647 [X10^{-4} ㎜] Inch : -2147483648 ~ 2147483647 [X10^{-5}Inch] degree : -2147483648 ~ 2147483647 [X10^{5}degree] pulse : -2147483648 ~ 2147483647 [pulse]
2	Homing high speed	㎜ : 1 ~ 2,147,483,647 [X10^{-2} ㎜/min] Inch : 1 ~ 2,147,483,647 [X10^{-3}Inch/min] degree : 1 ~ 2,147,483,647 [X10^{-3} degree/min] pulse : 1 ~ 2,147,483,647 [pulse/sec]
3	Homing low speed	
4	Homing acc. time	0 ~ 2,147,483,647 [ms]
5	Homing dec. time	
6	Homing dwell time	0 ~ 65,535[ms]
7	Origin compensation amount	㎜ : -2147483648 ~ 2147483647 [X10^{-3} ㎜] Inch : -2147483648 ~ 2147483647 [X10^{-5}Inch] degree : -2147483648 ~ 2147483647 [X10^{-5}degree] pulse : -2147483648 ~ 2147483647 [pulse]
8	Homing restart time	0 ~ 65,535[ms]
9	Homing mode	0:Approximate origin/Origin (Off), 1: Approximate origin /Origin (On), 2:High/Low limit/Origin,3: Approximate origin, 4:High speed origin, 5:High/Low Origin, 6:Origin
10	Homing direction	0:Forward, 1:Backward

(e) For the change value (OP3) setting range of each homing parameter item (OP4) which already set, refer to “4.2.1 Extended Parameter Content”

(f) In the example program above, it changes the item that saved on D02102 of axis1 homing parameter to the value that saved on D02100 using RAM setting method. In the case of D02102=6, D02100=100, it sets homing dwell time as “1000ms” using RAM setting method.

6.3.34 Manual Operation Parameter Teaching (Command :XSMP)

(1) Program

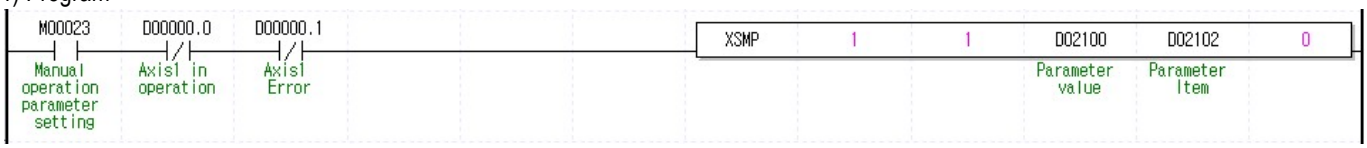

(2) Description

Device	Description
M00023	axis1 manual operation parameter setting input
D00000.0	axis1 signal in operation
D00000.1	axis1 error state
D02100	Parameter value
D02102	Parameter items

Command	XSMP				Manual operation parameter setting
Operand	OP1	Slot	Constant	WORD	Slot No. installed with APM module
	OP2	Axis	PMLK,constant,D,Z,R,ZR	WORD	Command axis (1 ~ 4 : axis1 ~ axis4)
	OP3	Parameter value	PMLK,constant,D,Z,R,ZR	DWORD	parameter value to change
	OP4	Parameter item	PMLK,constant,D,Z,R,ZR	WORD	parameter item to change (1~5)
	OP5	Setting method	PMLK,constant,D,Z,R,ZR	WORD	0: RAM setting, 1: ROM setting

※ PMLK means P, M, L and K areas.

(a) This is the command that changes the value of the item (OP4) which already set among manual operation parameter items to setting value (OP3). In the case of RAM setting by the setting method (OP5), the changed value is maintained during APM module is being connected to power. In the case of ROM setting, it is maintained without the power connection of APM module.

(b) The number of ROM setting operating is unlimited because manual operation parameter of APM module is saved on FRAM.

(c) Manual operation parameter setting command is unavailable to be executed when the axis is operating.

(d) Manual operation parameter items are as follows.

Setting value	Items	Setting value
1	Jog high speed	㎜ : 1 ~ 2,147,483,647 [X10^{-2} ㎜/min] Inch : 1 ~ 2,147,483,647 [X10^{-3}Inch/min] degree : 1 ~ 2,147,483,647 [X10^{-3} degree/min] pulse : 1 ~ 2,147,483,647 [pulse/sec]
2	Jog low speed	
3	Jog acc. time	0 ~ 2,147,483,647 [ms]
4	Jog dec. time	
5	Inching speed	㎜ : 1 ~ 65,535[X10^{-2} ㎜/min] Inch : 1 ~ 65,535[X10^{-3}Inch/min] degree : 1 ~ 65,535[X10^{-3} degree/sec] pulse : 1 ~ 65,535[pulse/sec]

(e) For the change value (OP3) setting range of each manual operation parameter item (OP4) which already set, refer to “4.3.1 Manual Operation Parameter Content”

(f) In the example program above, it changes the item that saved on D02102 of axis1 manual operation parameter to the value that saved on D02100 using RAM setting method. In the case of D02102=3, D02100=500, it sets jog acc. time as “500ms” using RAM setting method.

6.3.35 I/O Signal Parameter Teaching (Command : XSES)

(1) Program

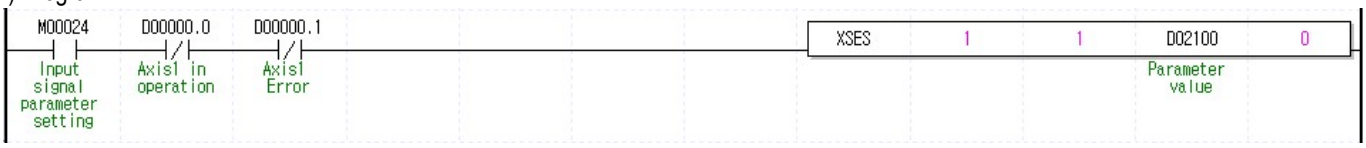

(2) Description

Device	Description
M00024	axis1 input signal parameter teaching input
D00000.0	axis1 signal in operation
D00000.1	axis1 error state
D02100	Parameter value

Command	XSES				Input signal parameter Teaching
Operand	OP1	Slot	Constant	WORD	Slot No. installed with APM module
	OP2	Axis	PMLK,constant,D,Z,R,ZR	WORD	Command axis (1 ~ 4 : axis1 ~ axis4)
	OP3	Parameter value	PMLK,constant,D,Z,R,ZR	WORD	parameter value to change
	OP4	Setting value	PMLK,constant,D,Z,R,ZR	WORD	0: RAM setting, 1: ROM setting

※ PMLK means P, M, L and K areas.

(a) This is the command that changes the value of the item (OP4) which already set among Input/output signal parameter items to setting value (OP3). In the case of RAM setting by the setting method (OP5), the changed value is maintained during APM module is being connected to power. In the case of ROM setting, it is maintained without the power connection of APM module.

(b) The number of ROM setting operating is unlimited because Input/output signal parameter of APM module is saved on FRAM.

(c) Input/output signal operation parameter setting command is unavailable to be executed when the axis is operating.

(d) The input signal applied with each bit of the value to be set in parameter item is as follows. If each bit are set, it operates as “B contact point”. If they are clear, it operates as “A contact point”

Bit	Signal
0	High limit signal
1	Low limit signal
2	Approximate Origin Signal
3	Origin signal
4	Emergency stop/Deceleration stop signal
5	Speed/Position control switching signal
6	Drive ready signal
7	In position signal
8	Declination counter clear output signal /Setting position output signal
9~15	Not use

(e) In the example program above, it changes axis1 input signal to the value set on D02100 using RAM setting method. If D02100 value is h43, high and low limit signal, drive ready signal will be changed to “B contact point”, the rest will be changed to “A contact point”.

6.3.36 Common Parameter Setting (Command : XSCP)

(1) Program

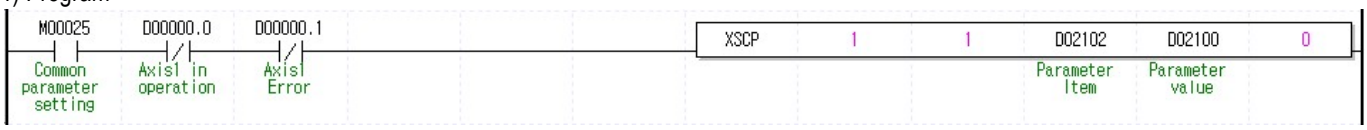

(2) Description

Device	Description
M00025	Common parameter setting input
D02100	Parameter value
D02102	Parameter items

Command	XSCP				Common parameter Setting
Operand	OP1	Slot	Constant	WORD	Slot No. installed with APM module
	OP2	Axis	PMLK,constant,D,Z,R,ZR	WORD	Command axis (1 ~ 4 : axis1 ~ axis4)
	OP3	Parameter value	PMLK,constant,D,Z,R,ZR	DINT	parameter value to change
	OP4	Parameter item	PMLK,constant,D,Z,R,ZR	WORD	Parameter item to change (1~7)
	OP5	Setting Method	PMLK,constant,D,Z,R,ZR	WORD	0: RAM setting, 1: ROM setting

※ PMLK means P, M, L and K areas.

(a) This is the command that changes the value of the item (OP4) which already set among common parameter items to setting value (OP3). In the case of RAM setting by the setting method (OP5), the changed value is maintained during APM module is being connected to power. In the case of ROM setting, it is maintained without the power connection of APM module.

(b) The number of ROM setting operating is unlimited because common parameter of APM module is saved on FRAM.

(c) The value to be set in parameter item is as follows.

Setting value	Items	Setting value
1	Speed override method	0: % setting 1: Speed setting
2	Encoder pulse input mode	0:CW/CCW(Phase of 1) 1:CW/CCW(Phase of 2) 2:Pulse/Dir(Phase of 1) 3:Pulse/Dir(Phase of 2) 4:PhaseA/B(Phase of 1) 5:PhaseA/B(Phase of 2) 6:PhaseA/B(Phase of 4)
3	Encoder Highest value	-2147483648 ~ 2147283647
4	Encoder Lowest value	
5	Pulse output level	0 : Low Active, 1 : High Active
6	Home fix status after EMG stop	0: Keep previous status 1: Home unfixed status
7	Destination coordinates for posistioning speed synchronization	0: Incremental 1: Absolute

(d) For the change value (OP3) setting range of each common parameter item (OP4) which already set, refer to “4.6.1 Common Parameter Content”

(e) In the example program above, it changes the item that saved on D02102 of common parameter to the value that saved on D02100 using RAM setting method. In the case of D02102=1, D02100=1, it sets speed override method time as “1: speed setting” using RAM setting method.

6.3.37 Operation Data Teaching (Command: XSMD)

(1) Program

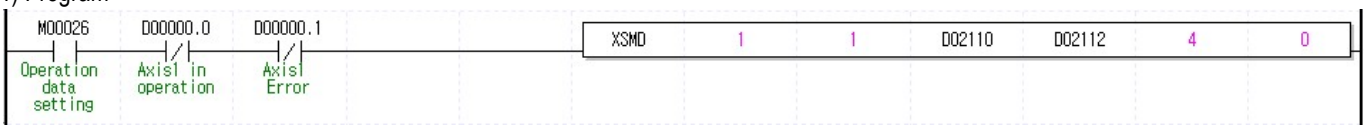

(2) Description

Device	Description
M00026	axis1 Operation data setting input
D00000.0	axis1 signal in operation
D00000.1	axis1 error state
D02110	Operation data value
D02112	Operation data items

Command	XSMD				Operation data setting
Operand	OP1	Slot	Constant	WORD	Slot No. installed with APM module
	OP2	Axis	PMLK,constant,D,Z,R,ZR	WORD	Command axis(1 ~ 4 : axis1 ~ axis4)
	OP3	Operation data value	PMLK,constant,D,Z,R,ZR	DINT	Operation data value to change
	OP4	Operation data item	PMLK,constant,D,Z,R,ZR	WORD	Operation data item (1~17)
	OP5	Step No.	PMLK,constant,D,Z,R,ZR	WORD	Operation data step No. to change (0~400)
	OP6	Step method	PMLK,constant,D,Z,R,ZR	WORD	0: RAM setting, 1: ROM setting

※ PMLK means P, M, L and K areas.

(a) This is the command that changes the item (OP4) of a step which already set on OP5 among operation data items to setting value (OP3). In the case of RAM setting by the setting method (OP6), the changed value is maintained during APM module is being connected to power. In the case of ROM setting, it is maintained without the power connection of APM module.

(b) The number of ROM setting operating is unlimited because operation data of APM module is saved on FRAM.

(c) Operation data teaching command is available to be executed when the axis is operating. But teaching data of operating step do not apply instantly. Operating step data will apply end of present step operation.

(d) The values to be set in operation data item are as follows

Setting value	Items	Setting value
1	Goal position	㎜ : -2147483648 ~ 2147483647 [X10^{-4} ㎜] Inch : -2147483648 ~ 2147483647 [X10^{-5}Inch] degree : -2147483648 ~ 2147483647 [X10^{-5}degree] pulse : -2147483648 ~ 2147483647 [pulse]
2	Circular interpolation subordinate position	
3	Operation speed	㎜ : 1 ~ 2,147,483,647 [X10^{-2} ㎜/min] Inch : 1 ~ 2,147,483,647 [X10^{-3}Inch/min] degree : 1 ~ 2,147,483,647 [X10^{-3} degree/min] pulse : 1 ~ 2,147,483,647 [pulse/sec]
4	Dwell time	0 ~ 65,535[ms]
5	M code No.	0 ~ 65,535
6	Sub coordinate setting	Bit unit setting Bit 7: 8axis, Bit 6: 7axis, Bit 5: 6axis, Bit 4: 5axis, Bit 3: axis4, Bit 2: axis3, Bit 1: axis2, Bit 0: axis1
7	Helical interpolation axis	0, axis1 ~ axis4 (0: General circular arc interpolation)
8	Number of circular arc interpolation turn	0~65,535
9	Coordinate	0:absolute, 1:relative
10	Control method	0:Unit position control, 1:, Shortening speed control 2:Shortening Feed control, 3:Linear interpolation, 4:Circular arc interpolation
11	Operation method	0:Single, 1:Repeat
12	Operation Pattern	0:End, 1:Continuous, 2:Go on
13	Circular arc size	0:Circular arc<180 1:Circular arc>=180
14	Acc. No.	0 ~ 3
15	Dec. No.	0 ~ 3
16	Circular arc interpolation method	0:Middle point, 1:Center point, 2:Radius
17	Circular arc interpolation direction	0:CW, 1:CCW

(e) For the change value (OP3) setting range of each position data item (OP4) which already set, refer to “4.7.1 Operation Data Content”

(f) In the example program above, it changes the item that saved on D02112 of axis1 operation to the value that saved on D02100 using RAM setting method. In the case of D02112=5, D02100=125, it changes M code no. of step no.4 to “125” using RAM setting method.

6.3.38 Read Variable Data (Command: XVRD)

(1) Program

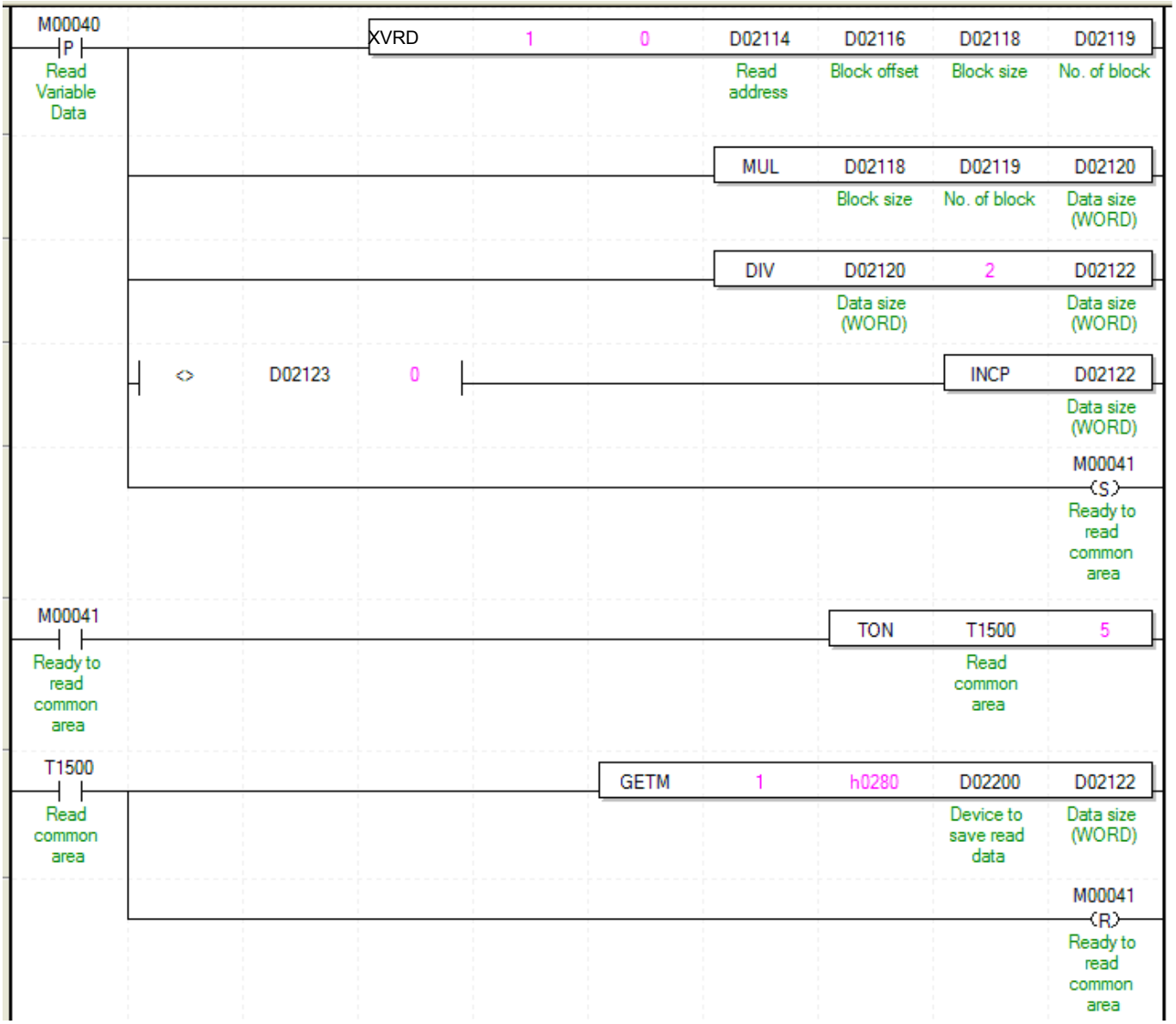

(2) Description

Device	Description
M00040	Input to read variable data
M00041	Ready flag to read common area (ready flag to save in internal device by GETM after executing command reading variable data)
D02114	Head address to read internal memory data of module
D02116	Block offset
D02118	Block size
D02119	Number of block
D02120	Size of data to read (WORD)
D02122	Size of data to read (DWORD)
D02123	Remaining (after changing WORD to DWORD)
D02200	Head device to save data

Command	XVRD				Read variable data
Operand	OP1	Slot	Constant	WORD	Base and slot number where positioning module is equipped
	OP2	Axis	PMLK,constant,D,Z,R,ZR	WORD	Axis to command (1 ~ 4: 1 axis ~ 4 axis)
	OP3	Read address	PMLK,constant,D,Z,R,ZR	DWORD	Head address of data in module internal memory to read (0 ~54217)
	OP4	Block offset	PMLK,constant,D,Z,R,ZR	DWORD	Offset between blocks (0 ~54217)
	OP5	Block size	PMLK,constant,D,Z,R,ZR	WORD	Size of one block (1 ~ 128)
	OP6	No. of block	PMLK,constant,D,Z,R,ZR	WORD	No. of block to read (1 ~ 128)

※ PMLK indicates P area, M area, L area, K area.

(a) This is command that reads data among parameter, operating data, CAM data by WORD unit from “Read address” into CPU. The number of data is set in “Block size”. In case “No. of block” set in OP6 is more than 2, it reads multiple blocks. At this time, head address of next block is “Block offset” apart from head address of current block.

(b) Max data size (Block size X No. of block) can be read with one command is 128 WORD.

(c) “Read variable data” can be executed in operation.

(d) If you execute “Read variable data”, the data read from positioning module will be saved in common area. In order to save in device for using in program, use GETM command [Read address: h280, data size: read data size (DWORD) as program example after executing “Read variable data” command

(e) In the above program, it reads data starting “Read address” set in D02114 by WORD unit into CPU. The number of data is “D02118”. In case “No. of block set in D02119 is more than 2, it reads multiple blocks starting “Read address” D02114 in order. In the above program, saves the read data in D02200 5ms after executing “Read variable data: command. You have to execute GETM command minimum 4ms after executing “Read variable data” to save the read data in common area.

6.3.39 Write Variable Data (Command: XVWR)

(1) Program

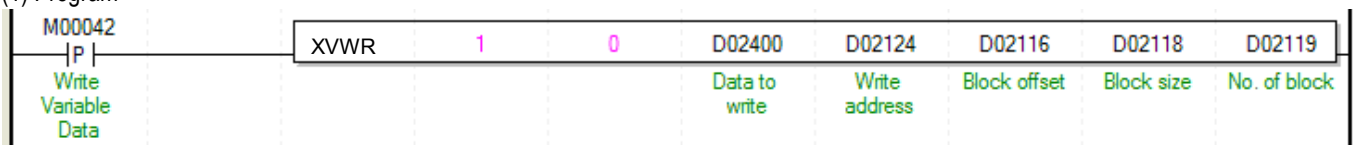

(2) Comment

Device	Description
M00042	Input to write variable data
D2400	Head address where data for writing is saved
D2124	Write address
D2116	Block offset
D2118	Block size
D2119	No. of block

Command	XVWR				Write variable data
Operand	OP1	Slot	Constant	WORD	Base and slot number where positioning module is equipped
	OP2	Axis	PMLK,constant,D,Z,R,ZR	WORD	Axis to command (1 ~ 4: 1 axis ~ 4 axis)
	OP3	Data device	PMLK,constant,D,Z,R,ZR	WORD	Head address where data to write is saved.
	OP4	Write address	PMLK,constant,D,Z,R,ZR	DWORD	Head address to write module internal memory data (0 ~54217)
	OP5	Block offset	PMLK,constant,D,Z,R,ZR	DWORD	Offset between blocks (0 ~ 54217)
	OP6	Block size	PMLK,constant,D,Z,R,ZR	WORD	Size of one block (1 ~ 128)
	OP7	No. of block	PMLK,constant,D,Z,R,ZR	WORD	No. of block to read (1 ~ 128)

※ PMLK indicates P area, M area, L area, K area.

(a) This is command that writes data starting “Write address” set in OP4 among parameter of positioning module internal memory, operation data, CAM data to internal memory address starting OP3. The number of data to write is “Block size” OP6. In case “No. of block” is more than 2, writes multiple blocks. At this time, head address of next block is “Block offset” OP5 apart from head address of current block.

(b) Max data size (Block seze X No. of block) that can be written with one command is 128 WORD.

(c) “Write variable data” command can’t be executed in operation except for when write user CAM data in operation of user CAM.

(d) In case you execute “Write variable data”, the changed value is kept during power on. So, to save the data, execute “Save Parameter/Operation data (XWRT) command.

(e) In the above program example, writes data starting from D02400 to internal memory address starting form “D2124” in order by WORD unit. The number of data is “Block size”. In case “No. of Block” set in D02119 is larger than 2, writes multiple blocks. At this time, head address of next block is “Block offset” OP5 apart from head address of current block.

6.3.40 Parameter/Operation Data Save (Command : XWRT)

(1) Program

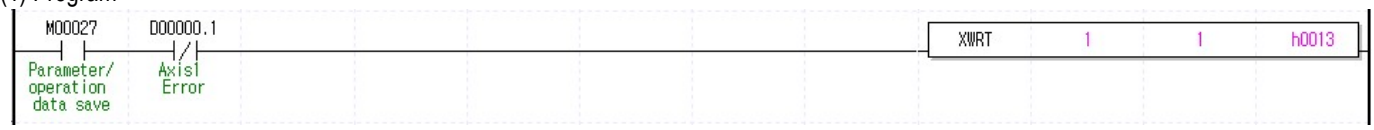

(2) Description

Device	Description
M00027	axis1 parameter/operation data save input
D00000.1	axis1 error state

Command	XWRT				Parameter/operation Data save
Operand	OP1	Slot	Constant	WORD	Slot No. installed with APM module
	OP2	Axis	PMLK,constant,D,Z,R,ZR	WORD	Command axis (1 ~ 4 : axis1 ~ axis4)
	OP3	Selection axis	PMLK,constant,D,Z,R,ZR	WORD	Axis to save data

※ PMLK means P, M, L and K areas.

(a) This is the command that saves the parameter data & operation data of selected axis on FRAM.

(b) The current parameter & operation data of selected axis will be saved on FRAM, it is also maintained when the power is off.

(c) The number of parameter/operation data save command is unlimited.

(d) Parameter/operation data save command is unavailable to be executed when the axis is operating. Execute it when all axes are not in operation.

(e) Set the selection axis by setting each bit of axis.

15 ~ 4 Bit	3Bit	2Bit	1Bit	0Bit
Not use	axis4	axis3	axis2	axis1

That is, if set h0003, axis2, axis1 will be set to execute parameter/operation data save.

(f) In the example program above, save parameter/operation data of 1, axis2 on FRAM.

6.3.41 Emergency Stop (Command : XEMG)

(1) Program

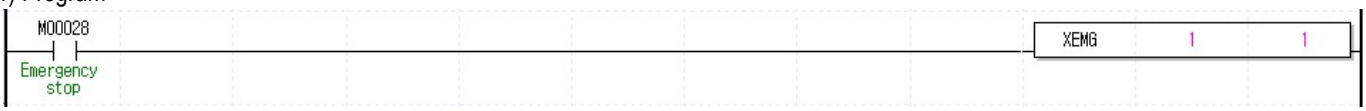

(2) Description

Device	Description
M00028	axis1 internal emergency stop input

Command	XEMG				Emergency stop
Operand	OP1	Slot	Constant	WORD	Slot No. installed with APM module
	OP2	Axis	PMLK,constant,D,Z,R,ZR	WORD	Command axis (1 ~ 4 : axis1 ~ axis4)

※ PMLK means P, M, L and K areas.

(a) Execute internal emergency stop command to command axis.

(b) dec. time in emergency stop become the time which set on “Emergency stop dec. time” item of each basic parameter.

(c) The example program above is the command stop axis1 emergently.

6.3.42 Error Reset (Command : XCLR)

(1) Program

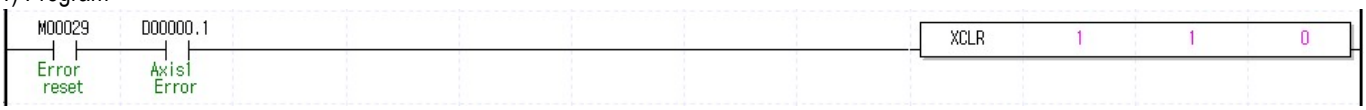

(2) Description

Device	Description
M00029	axis1 error reset input
D00000.1	axis1 error state

Command	XCLR				Error reset
Operand	OP1	Slot	Constant	WORD	Slot No. installed with APM module
	OP2	Axis	PMLK,constant,D,Z,R,ZR	WORD	Command axis (1 ~ 4 : axis1 ~ axis4)
	OP3	Common error	PMLK,constant,D,Z,R,ZR	WORD	Common error reset (Ignored in XPM)

※ PMLK means P, M, L and K areas.

(a) This is the command that reset the error occurred on command axis.

(b) Common error item does not affect operation even if it is set by any value.

(c) The example program above is that reset the error occurred on axis1.

6.3.43 Error History Reset (Command : XECLR)

(1) Program

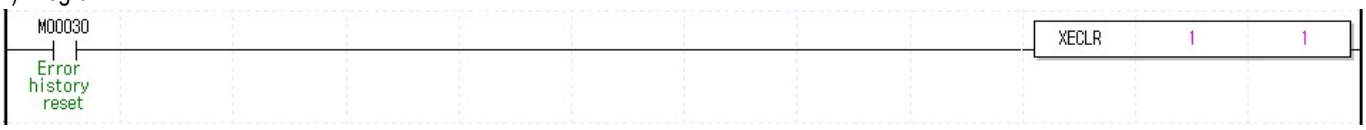

(2) Description

Device	Description
M00030	axis1 error history reset input

Command	XECLR				Error History Reset
Operand	OP1	Slot	Constant	WORD	Slot No. installed with APM module
	OP2	Axis	PMLK,constant,D,Z,R,ZR	WORD	Command axis (1 ~ 4 : axis1 ~ axis4)

※ PMLK means P, M, L and K areas.

(a) This is the command that reset the error history about command axis.

(b) APM module in each axis saves 10 (Maximum) error histories.

(c) The example program above is that reset errors occurred on axis1.

6.3.44 Point Start (Command : XPST)

(1) Program

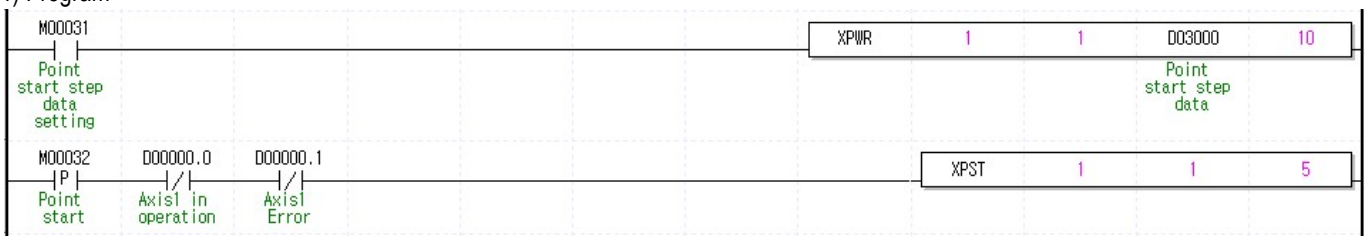

(2) Description

Device	Description
M00031	axis1 point start step data setting input
M00032	axis1 point start input
D00000.0	axis1 operating state
D00000.1	axis1 error state
D03000	Point start step data setting leading device

Command	XPST				Point operation
Operand	OP1	Slot	Constant	WORD	Slot No. installed with APM module
	OP2	Axis	PMLK,constant,D,Z,R,ZR	WORD	Command axis (1 ~ 4 : axis1 ~ axis4)
	OP3	Point operation No.	PMLK,constant,D,Z,R,ZR	WORD	Point operation step No. (1~20)

※ PMLK means P, M, L and K areas.

(a) This is the command that execute point start of command axis.

(b) It is unavailable to be executed when the axis is operating.

(c) It is able to set maximum 20 point start step.

(d) Step data must be set in point start data area before execute point start. For the point start step data setting, refer to the next page about XPWR command.

(d) For the detail description about operation of point start, refer to “9.2.17 Positioning start (4) Point start”.

(f) The example program sets 10 point steps from D03000 on axis1 and executes point start to 5 point step which already set.

6.3.45 POINT Start Step Data Setting (Command: XPWR)

(1) Program

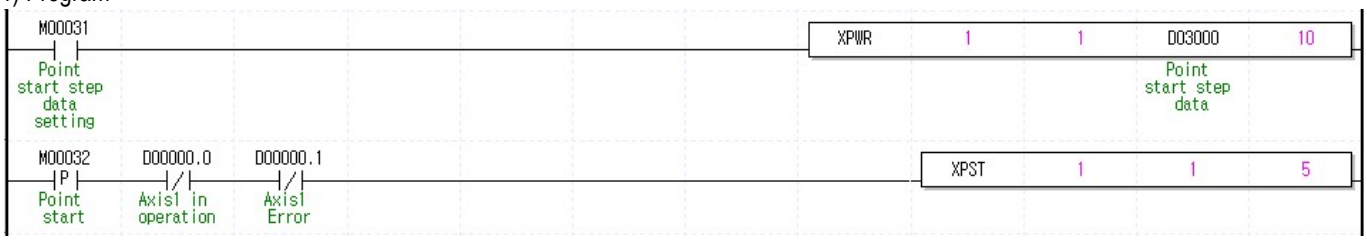

(2) Description

Device	Description
M00031	axis1 Point Start Step Data Setting Input
M00032	axis1 Point Start Input
D00000.0	axis1 Operating State
D00000.1	axis1 Error State
D03000	Point Start Step Data Setting Leading Device No.

Command	XPWR				POINT Start Step Data Setting
Operand	OP1	Slot	Constant	WORD	Slot No. installed with APM module
	OP2	Axis	PMLK,constant,D,Z,R,ZR	WORD	Command axis (1 ~ 4 : axis1 ~ axis4)
	OP3	Device	PMLK,D,Z,R,ZR	WORD	Leading No. of device with POINT Start Step Data
	OP3	Data No.	PMLK,constant,D,Z,R,ZR	WORD	Data No. to save (1 ~ 20)

※ PMLK means P, M, L and K areas.

(a) This is the command that sets step which set on device of point step area of command axis.

(b) Point start won't be executed by only point start step data setting command. Refer to the previous page about PST command.

(c) It is able to set maximum 20 point start step.

(d) Point start step data will be set like item below depending on the leading no. of device.

No.	Device No.	POINT start step data
1	Device + 0	POINT start step data 1
2	Device + 1	POINT start step data 2
3	Device + 2	POINT start step data 3
4	Device + 3	POINT start step data 4
5	Device + 4	POINT start step data 5
6	Device + 5	POINT start step data 6
7	Device + 6	POINT start step data 7
8	Device + 7	POINT start step data 8
9	Device + 8	POINT start step data 9
10	Device + 9	POINT start step data 10
11	Device + 10	POINT start step data 11
12	Device + 11	POINT start step data 12
13	Device + 12	POINT start step data 13
14	Device + 13	POINT start step data 14
15	Device + 14	POINT start step data 15
16	Device + 15	POINT start step data 16
17	Device + 16	POINT start step data 17
18	Device + 17	POINT start step data 18
19	Device + 18	POINT start step data 19
20	Device + 19	POINT start step data 20

(e) Step data must be set in point start data area before execute point start.

(f) For detail description of point start operation, refer to “9.2.17 Positioning Start (4) Point Start”.

(g) The example program above sets 10 point steps from D03000 on axis1 and executes point start to 5 point steps which already set.

(h) It is possible to set point operation step with PUT command. At that time, refer to memory address of “5.1.1 Point Operation Step Data” and “6.1.2 Internal Memory Writing”. If apply PUT to the example program above, refer to follows.

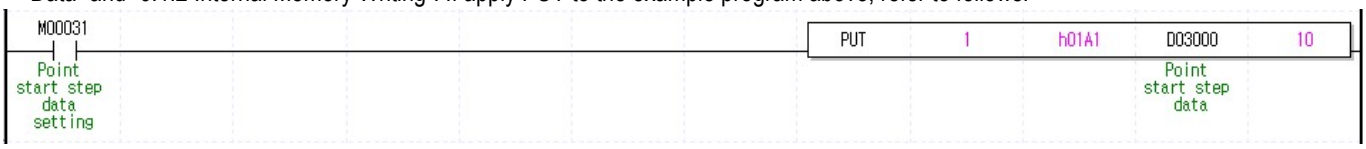

6.3.46 Operation State Reading (Command: XSRD)

(1) Program

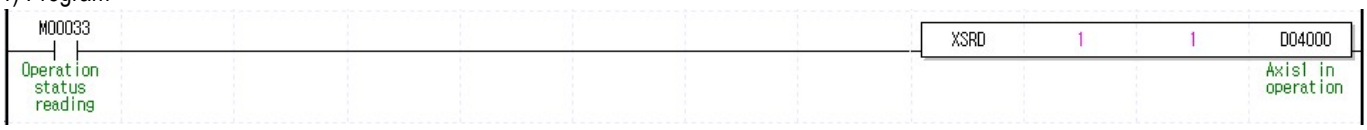

(2) Description

Device	Description
F00099	Always ON Flag
D04000	Head address to save the operation status of axis 1

Command	XSRD				Operation state reading
Operand	OP1	Slot	Constant	WORD	Slot No. installed with APM module
	OP2	Axis	PMLK,constant,D,Z,R,ZR	WORD	Axis to read the current state
	OP3	Device	PMLK,D,Z,R,ZR	WORD	Leading No. of device to read and save the current state value

※ PMLK means P, M, L and K areas.

(a) This is the command that checks the operation state of command axis and save it on designated device.

(b) The current state will be saved like items below depending on leading no. of device.

Device No.	Size	State
Device	WORD	Operation State Information (Up)
Device + 1	WORD	Operation State Information (Down)
Device + 2	WORD	Axis Information
Device + 3	WORD	External Input/Output Signal State
Device + 4	DINT	Current Position
Device + 6	DWORD	Current Speed
Device + 8	WORD	Step No.
Device + 9	WORD	M Code No.
Device + 10	WORD	Error state
Device + 11 ~ Device + 20	WORD	Error History 1 ~ 10
Device + 21	DINT	Encoder Value

(c) It is able to read the current state of axis with GET command. At this time, refer to memory address of “5.1.4 State Information” and “6.1.1 Internal Memory Reading”. If use GET command in the example above, it is as follows. In addition, it is able to read the states that you need with GET command.

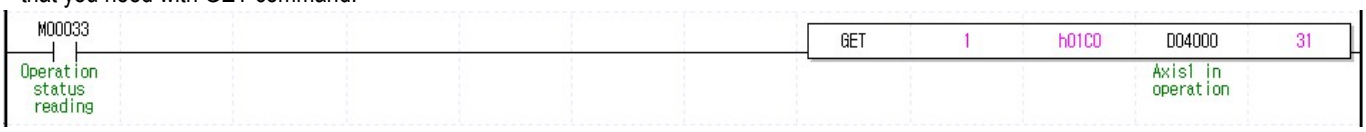

6.3.47 Restart (Command: XRSTR)

(1) Program

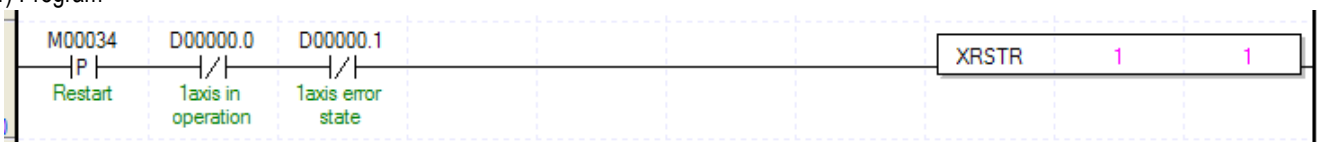

(2) Description

Device	Description
M0034	1axis restart command input

Command	XRSTR				Restart
Operand	OP1	Slot	Constant	WORD	Slot No. installed with positioning module
	OP2	Axis	PMLK,constant,D,Z,R,ZR	WORD	Command axis (1~8: 1axis ~ 8axis)

※ PMLK means P, M, L and K areas.

(a) This is the command that makes the servo restart with position data set up at previous operation after it stops with DEC. stop

(b) You can't execute this command while axis is in operation.

(c) If you start the axis with commands other than "Restart" after it stops with DEC. stop, "Restart" will not be executed

(d) In example above, it gives the command to 1-axis

(d) For detailed information on "Restart", refer to "9.2.20. Restart".

6.3.48 Setting Position Signal Output Enable/Disable (Command: XPOE)

(1) Program

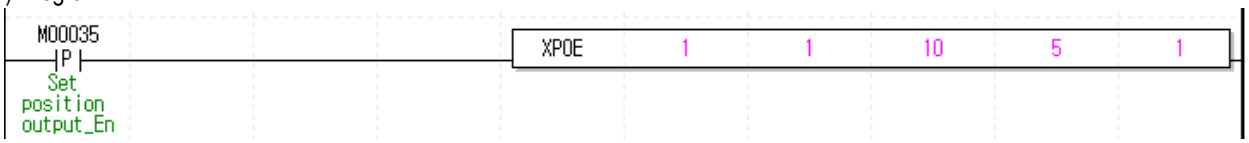

(2) Description

Device	Description
M0035	1axis set position output enable input

Command	XRSTR				Restart
Operand	OP1	Slot	Constant	WORD	Slot No. installed with positioning module
	OP2	Axis	PMLK,constant,D,Z,R,ZR	WORD	Command axis (1~8: 1axis ~ 8axis)
	OP3	Data No.	PMLK,constant,D,Z,R,ZR	WORD	Position data no. of set position output
	OP4	Time	PMLK,constant,D,Z,R,ZR	WORD	Output signal keeping time(0 ~ 65535ms)
	OP5	Enable/ Disable	PMLK,constant,D,Z,R,ZR	WORD	Enable/Disable (0: Disable, 1: Enable)

※ PMLK means P, M, L and K areas.

(a) This is the command that enable or disable setting position signal output to positioning module.

(b) If setting position signal output enable and current position is on set position area, signal will be output from the deviation counter clear/setting position signal output pin.

(c) Set the number of set position of setting position signal output on OP3. Data number can set following value.
0 ~ 50 (If the number of data is set to 0, setting position signal output is disable)

(d) Setting position signal output is keeping during set time.

(e) When execute the setting position signal output function on disable of OP5, current output signal will be turn off instantly.

(f) In example above, it set the 10 position data from axis1 and executes signal output during 5ms.

Chapter 7 Function Block

7.1 Common Issues of Function Block

(1) The functions and directions of the following I/O parameter are common for positioning function block.

Category	Parameter	Data Type	Description
Input	REQ	BOOL	Execution request of function block - Function block is executed if “0→1”(edge or level) as long as the connection condition is met during the program.
	BASE	USINT	Base position number - This is the area where the base number on which positioning module is installed is set. - Setting range: 0 ~ 7
	SLOT	USINT	Base position number - This is the area where the slot number on which positioning module is installed is set. - Setting range: 0 ~ 7
	AXIS	USINT	Axis number used - 1 ~ 4 : axis1 ~ axis4 “Error 6” is generated if a value out of the setting range is set
Output	DONE	BOOL	Indicates function block execution end state - “1” is outputted if function block is executed completely without error and maintained until the next execution; if an error occurs, it outputs “0”
	STAT	USINT	Error state indication - If an error occurs during function block execution, it generates the error number.

Error code of STAT of Positioning Function Block is as follows.

STAT	Description	Detailed description
0	Normal	In case function block is executed normally, DONE=1 and STAT=0.
1	Base number setting error	Base number is out of range Setting range according to CPU is as follows. XGI-CPU/H : 0 ~ 7 XGI-CPUS : 0 ~ 3 XGR-CPUH : 0 ~ 31
3	Slot number setting error	Slot number is out of range (0 ~ 11).
4	Empty slot error	There is no module at the position specified with BASE, SLOT.
5	Positioning module mismatch	There is a module other than positioning module at the position specified with BASE, SLOT.
6	Axis number error	AXIS is out of range (1 ~ 4).
10	Function Block overlap execution error	This error occurs when previously executed function block is not yet read by positioning module before executing new function block. Execute new function block after previously executed function block is read by positioning module. It needs up to 2ms to read the function block after executing function block.
11	Input variable setting error	Variable other than BASE, SLOT, AXIS is out of range. Check the input variable
101 : 801	Positioning module error	Error that occurred at positioning module as a result of executing the function block

(2) The position and speed setting ranges of positioning function block are as follows and the ranges are based on pulse for position or pulse/sec for speed.

Category	Setting unit	Setting range
Position	pulse	-2,147,483,648 ~ 2,147,483,647[pulse]
	mm	-2,147,483,648 ~ 2,147,483,647[x 10^{-4}mm]
	inch	-2,147,483,648 ~ 2,147,483,647[x 10^{-5}inch]
	degree	-2,147,483,648 ~ 2,147,483,647[x 10^{-5}degree]
Speed	pulse/sec	1 ~ 2,147,483,647 [pulse/sec]
	mm/min	1 ~ 2,147,483,647 [X10^{-2}㎜/min]
	inch/min	1 ~ 2,147,483,647 [X10^{-3}Inch/min]
	degree/min	1 ~ 2,147,483,647 [X10^{-3} degree/min]

(3) For the data types which usually used on function block are as follows.

No.	Initial	Data Types	Size(Bit)	Range
1	BOOL	Boolean	1	0, 1
2	SINT	Short Integer	8	-128 ~ 127
3	USINT	Unsigned Short Integer	8	0 ~ 255
4	INT	Integer	16	-32768 ~ 32767
5	UINT	Unsigned Integer	16	0 ~ 65535
6	DINT	Double Integer	32	-2147483648 ~ 2147483647
7	UDINT	Unsigned Double Integer	32	0 ~ 4294967295

7.2 Function Block of Positioning Module

Here describes the positioning function blocks used in XGI CPU Module.

No.	Name	Description	Operation condition
1	XPM_ORG	Homing start	Edge
2	XPM_FLT	Floating origin setting	Edge
3	XPM_DST	Direct start	Edge
4	XPM_IST	Indirect start	Edge
5	XPM_SST	Simultaneous start	Edge
6	XPM_VTP	Speed/position switching control	Edge
7	XPM_VTPP	Position specified peed/position switching control	Edge
8	XPM_PTV	Position/speed switching control	Edge
9	XPM_STP	Deceleration stop	Edge
10	XPM_SKP	Skip operation	Edge
11	XPM_SSP	Position synchronization	Edge
12	XPM_SSS	Speed synchronization	Edge
13	XPM_SSSP	Positioning Speed Synchronous	Edge
14	XPM_POR	Position override	Edge
15	XPM_SOR	Speed override	Edge
16	XPM_PSO	Positioning speed override	Edge
17	XPM_NMV	Continuous operation	Edge
18	XPM_INC	Inching operation	Edge
19	XPM_RTP	return to the previous position of manual operation	Edge
20	XPM_SNS	Start step No. change	Edge
21	XPM_SRS	Repeat step No. change	Edge
22	XPM_MOF	M code release	Edge
23	XPM_PRS	Current position preset	Edge
24	XPM_EPRE	Encoder value preset	Edge
25	XPM_ATEA	Teaching array	Edge
26	XPM_SBP	Basic parameter teaching	Edge
27	XPM_SEP	Extended parameter teaching	Edge
28	XPM_SHP	Homing parameter teaching	Edge
29	XPM_SMP	Manual operation parameter teaching	Edge
30	XPM_SIP	Input signal parameter teaching	Edge
31	XPM_SCP	Common parameter teaching	Edge
32	XPM_SMD	Operation data teaching	Edge
33	XPM_VRD	Variable data read	Edge
34	XPM_VWR	Variable data write	Edge
35	XPM_EMG	Emergency stop	Edge
36	XPM_RST	Error reset/output disabled release	Edge
37	XPM_HRST	Error History Reset	Edge
38	XPM_PST	Point start	Edge
39	XPM_WRT	Parameter/operation data save	Edge
40	XPM_CRD	Operation information read	Level
41	XPM_SRD	Operation state read	Level
42	XPM_ENCRD	Encoder value read	Level
43	XPM_JOG	JOG operation	Level
44	XPM_CAM	Cam Start	Edge
45	XPM_CAMO	Main axis offset-specified CAM start	Edge
46	XPM_ELIN	Circular Interpolation Operation	Edge
47	XPM_RSTR	Restart	Edge

48	XPM_POE	Setting position output enable/disable	Edge

Note

(1) Dedicated commands of positioning module are executed in rising edge. Therefore, it operates when the input condition is “On”. If you want it to operate again, the input condition has to be “Off” first, then be “On”. But, XPM_SRD will be operated by high level. Therefore, it continues to operate during the input condition is “On”. If the input condition become “Off”, it does not operate.

(2) Duration time of XPM command is as follows.

(a) XPM_WRT : 15ms (per each axis)

(b) The commands excepting XPM_WRT : 2ms

Notes

▷ For the positioning block except XPM_SRD, XPM_CRD, XPM_ENCRD and XPM_JOG, only one should be executed for one function block execution axis within a scan. If using it as presented in the following example program, the function block does not work properly.

If executing a different function block;

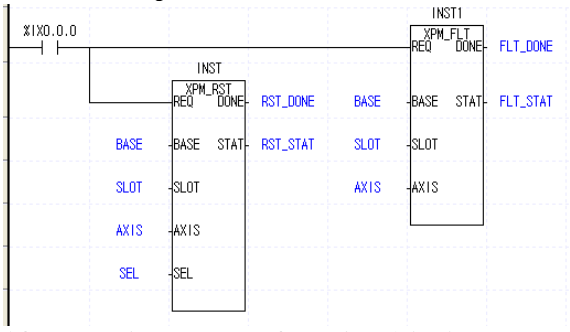

If executing a same function block;

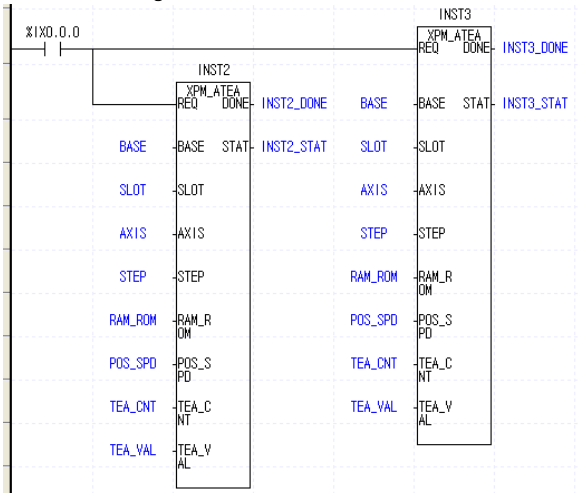

▷ Same block can be executed on a different axis.

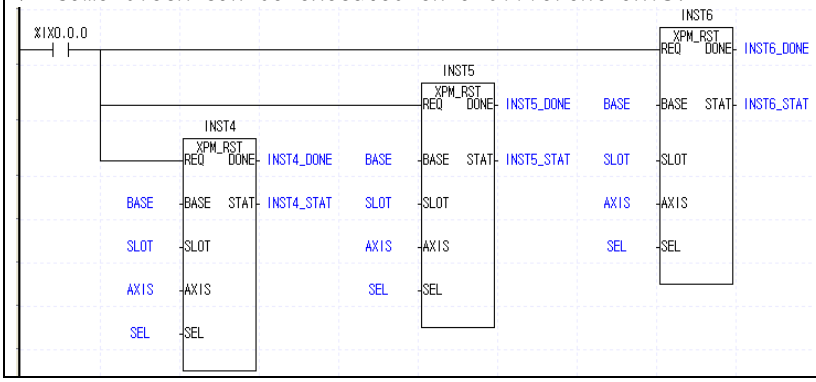

7.3 Function Block related to Module Information Read

7.3.1 Operation Information Read (XPM_CRD)

Form of Function Block	Description
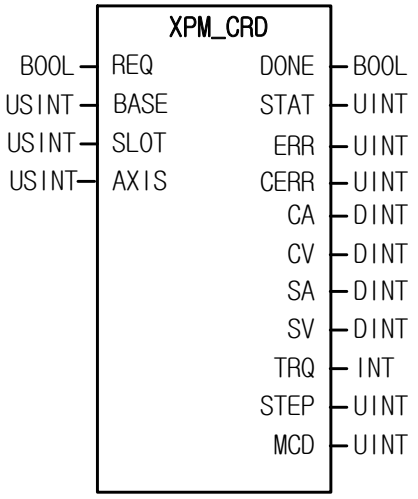	**Input** REQ : Request for execution of function block BASE : Set the base no. with module SLOT : Set the slot no. with module AXIS : Axis to command 1 ~ 4: aixs1 ~ axis4 **Output** DONE : Maintain 1 after first operating STAT : Output the error no. in operation ERR : Display axis error CERR : Display common error CA : Display the command position CV : Display the command speed SA : Display the current position SV : Display the current speed TRQ: Display the current torque STEP : Display step no. of the current operation data MCD : Display the current M code value

(1) Read the axis state of current operation designated in the axis of designated positioning module with BASE (Base no. of Positioning module) and SLOT (Slot no. of Positioning module).

(2) The operation information is saved in parameter set on output of function block.

(3) Set an axis to command and the value like followings are available to be set. If you set wrongly, “Error6” arises.
1 ~ 4 : axis1 ~ axis4

(4) You can monitor command position, command speed, current position, current speed, torque, operation data no. and M code value of axis already set through reading them or use them as a condition in user’s program.

(5) “-“ speed displayed as command speed(CV) or current speed(SV) means reverse direction.

7.3.2 Operation State Read (XPM_SRD)

Form of Function Block	Description
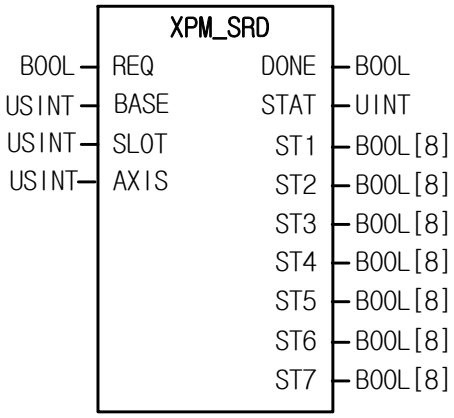	**Input** REQ : Request for execution of function block BASE : Set the base no. with module SLOT : Set the slot no. with module AXIS : Axis to command 1 ~ 4: axis1 ~ axis4 **Output** DONE : Maintain 1 after first operating STAT : Output the error no. in operation ST1 : State 1 ST2 : State 2 ST3 : State 3 ST4 : State 4 ST5 : State 5 ST6 : State 6 ST7 : State 7

(1) Give “Bit Information of Current operation reading” command to the axis designated as the axis of positioning module with BASE (Base no. of Positioning module) and SLOT (Slot no. of Positioning module).

(2) The bit information about the state of current operation is saved in parameter set on ST1 ~ ST7.

(3) Set an axis to command from 1 ~ 4. If you set wrongly, “Error6” arises.

(4) The contents of output parameters, ST1 ~ ST7 are important information necessarily applied in the program.

	Bit	Description	Bit	Description
ST1	[0]	Operating(0:STOP, 1:BUSY)	[4]	Origin fix state(0:Uncompletion, 1:Completion)
	[1]	Error state	[5]	-
	[2]	Positioning completion	[6]	Stop
	[3]	M code On signal(0:Off, 1:On)	[7]	-
ST2	[0]	High limit detection	[4]	In acceleration
	[1]	Low limit detection	[5]	In stable speed
	[2]	Emergent Stop	[6]	In deceleration
	[3]	Direction(0:Forward, 1:Reverse)	[7]	In dwell
ST3	[0]	Axis1 in positioning control	[4]	In circular interpolation operation
	[1]	Axis1 in speed control	[5]	In homing operation
	[2]	In linear interpolation	[6]	In position synchronous start operation
	[3]	-	[7]	In speed synchronous start operation
ST4	[0]	In jog operation	[4]	In previous position of manual operation returning operation
	[1]	-	[5]	In CAM control operation
	[2]	In inching operation	[6]	In Feed control operation
	[3]	-	[7]	In ellipse interpolation operation
ST5	[0]	Main axis information 1 ~ 4: axis1 ~ axis4 9: Encoder	[4]	Axis state(0:Main axis, 1: sub axis)
	[1]		[5]	-
	[2]		[6]	-
	[3]		[7]	-
ST6	[0]	Emergent stop/Dec. stop signal	[4]	High limit signal
	[1]	-	[5]	Low limit signal
	[2]	-	[6]	Origin signal
	[3]	-	[7]	Near origin signal
ST7	[0]	Switching signal of Speed/Position control	[4]	In-position signal
	[1]	-	[5]	Declination counter clear output signal
	[2]	-	[6]	-
	[3]	Drive ready signal	[7]	-

7.3.3 Encoder Value Read (XPM_ENCRD)

Form of Function Block	Description
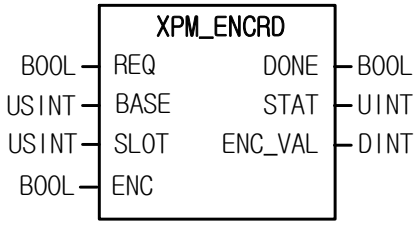	**Input** REQ : Request for execution of function block BASE : Set the base no. with module SLOT : Set the slot no. with module ENC : Encoder no. (Always 0) 0: Encoder **Output** DONE : Maintain 1 after first operating STAT : Output the error no. in operation ENC_VAL : Current value of encoder

(1) Give “Encoder Reading” command to the axis designated as the axis of positioning module with BASE (Base no. of Positioning module) and SLOT (Slot no. of Positioning module).

(2) The current encoder value is displayed on ENC_VAL

(3) Set the encoder want to read on ENC, it has to be always 0 in XPM positioning module.

7.4 Parameter/Operation Data Teaching Function Block

7.4.1 Basic Parameter Teaching (XPM_SBP)

Form of Function Block	Description
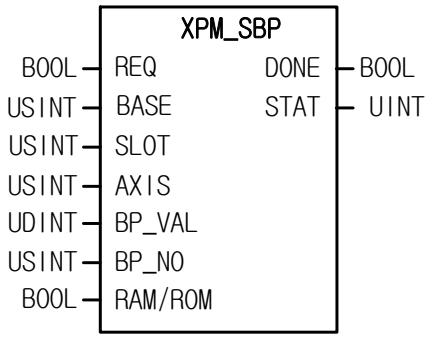	**Input** REQ : Request for execution of function block BASE : Set the base no. with module SLOT : Set the slot no. with module AXIS : Axis to command 1 ~ 4: aixs1 ~ axis4 BP_VAL : Basic parameter to change BP_NO : Item no. of basic parameter to change RAM/ROM : Method of parameter save 0: save on RAM 1: save on ROM **Output** DONE : Maintain 1 after first operating STAT : Output the error no. in operation

(1) Give “Basic Parameter Teaching” command to the axis designated as the axis of positioning module with BASE (Base no. of Positioning module) and SLOT (Slot no. of Positioning module).

(2) Parameter value modified by basic parameter teaching command and setting RAM/ROM to “0” is valid within power connection. If you want to keep the parameter without power connection, execute basic parameter teaching command with setting RAM/ROM as “1” or save the modified parameter value on FRAM with XPM_WRT (Parameter/Operation Data Saving command) after basic parameter teaching.

(3) Set an axis to command from 1 ~ 4. If you set wrongly, “Error6” arises.

1 ~ 4 : axis1 ~ axis4

(4) When an axis is operating, basic parameter setting command could not execute

(5) The value that needs to be set in basic parameter is as follows.

Value	Items	Setting Range
1	Speed Limit	㎜ : 1 ~ 2,147,483,647 [X10^{-2} ㎜/min] Inch : 1 ~ 2,147,483,647 [X10^{-3}Inch/min] degree : 1 ~ 2,147,483,647 [X10^{-3} degree/min] pulse : 1 ~ 2,147,483,647 [pulse/sec]
2	Acc. Time 1	1 ~ 2,147,483,647 [ms]
3	Acc. Time 2	
4	Acc. Time 3	
5	Acc. Time 4	
6	Dec. Time 1	1 ~ 2,147,483,647 [ms]
7	Dec. Time 2	
8	Dec. Time 3	
9	Dec. Time 4	
10	Urgent stop Dec. Time	1 ~ 2,147,483,647 [ms]
11	Demultiply ouput pulse/rotation	1 ~ 200,000,000
12	Transfering Distance/rotation	
13	Unit	0:Pulse, 1:mm, 2:Inch, 3:Degree
14	Unit assignment	0: x 1, 1: x 10, 2: x 100, 3: x 1000
15	Unit for speed command	0: unit/time, 1: rpm
16	Bias speed	1 ~ speed limit
17	Pulse output mode	0: CW/CCW, 1: PLS/DIR, 2: PHASE

7.4.2 Extended Parameter Teaching (XPM_SEP)

Form of Function Block	Description
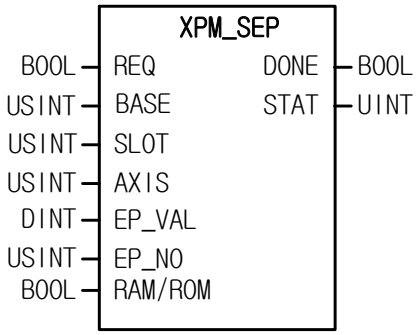	**Input** REQ : Request for execution of function block BASE : Set the base no. with module SLOT : Set the slot no. with module AXIS : Axis to command 1 ~ 4: axis1 ~ axis4 EP_VAL : Parameter value to modify EP_NO : Item no. of parameter to modify RAM/ROM : Method for saving parameter 0: Save on RAM 1: Save on ROM **Output** DONE : Maintain 1 after first operating STAT : Output the error no. in operation

(1) Give “Extended Parameter Teaching” command to the axis designated as the axis of positioning module with BASE (Base no. of Positioning module) and SLOT (Slot no. of Positioning module).

(2) Parameter value modified by extended parameter teaching command and setting RAM/ROM to “0” is valid within power connection. If you want to keep the parameter without power connection, execute extended parameter teaching command with setting RAM/ROM as “1” or save the modified parameter value on FRAM with XPM_WRT (Parameter/Operation Data Saving command) after extended parameter teaching.

(3) Set an axis to command from 1 ~ 4. If you set wrongly, “Error6” arises.

1 ~ 4 : axis1 ~ axis4

(4) When an axis is operating, extended parameter setting command could not execute

(5) The extended parameter items and setting values are as follows.

Value	Item	Setting Range
1	Software high limit	㎜ :-2147483648 ~ 2147483647[X10^{-4} ㎜] Inch:-2147483648 ~ 2147483647[X10^{-5}Inch] degree:-2147483648 ~ 2147483647[X10^{-5}degree] pulse:-2147483648 ~ 2147483647[pulse]
2	Software low limit	
3	Backlash compensation amount	mm: 0 ~ 65,535[X10^{-4} ㎜] inch: 0 ~ 65,535[X10^{-5}Inch] degree: 0 ~ 65,535[X10^{-5}degree] pulse: 0 ~ 65,535[pulse]
4	Positioning end output time	0 ~ 65,535[ms]
5	S-Curve ratio	1 ~ 100
6	Position to interpolate circular arc of 2axis linear interpolation	mm: 0 ~ 2147483647[X10^{-4} ㎜] Inch: 0 ~ 2147483647[X10^{-5}Inch] degree: 0 ~ 2147483647[X10^{-5}degree] pulse: 0 ~ 2147483647[pulse]
7	Acc./dec. pattern	0: Trapezoid operating, 1: S-curve operating
8	M code mode	0: None, 1: With, 2: After
9	Detection of High/Low limit in speed control	0: Not detect, 1: Detect
10	Condition for positioning completion	0: Dwell time 1: In-position 2: Dwell time AND In-position 3: Dwell time OR In-position
11	Positioning method of interpolation continuous operation	0: passage of goal position, 1: passage of near position
12	2axis linear interpolation continuous operation circular arc interpolating	0: No circular interpolating, 1: Circular interpolating continuous operation
13	External speed/position control switching	0: Not permit, 1: Permit
14	Selection of external emergent stop/dec stop	0: Emergent stop, 1: Dec. Stop
15	Coordinates of positioning speed override	0: Absolute, 1: Relative
16	Pulse output direction	0: CW, 1: CCW
17	Infinite running repeat position	mm: 1 ~ 2147483647[X10-4 ㎜] Inch: 1 ~ 2147483647[X10-5Inch] degree: 1 ~ 2147483647[X10-5degree] pulse: 1 ~ 2147483647[pulse]
18	Infinite running repeat	0: disable, 1: enable
19	Speed/position switching coordinate	0: Incremental, 1: Absolute
20	Interpolation speed selection	0: main axis speed 1: synthetic speed
21	Module output signal selection	0: Deviation counter clear, 1: Setting position output

7.4.3 Homing Parameter Teaching (XPM_SHP)

Form of Function Block	Description
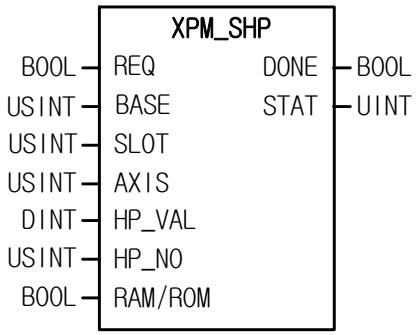	**Input** REQ : Request for execution of function block BASE : Set the base no. with module SLOT : Set the slot no. with module AXIS : Axis to command 1 ~ 4: axis1 ~ axis4 HP_VAL : Homing parameter value to modify HP_NO : Item no. of homing parameter to modify RAM/ROM : Method for saving parameter 0: Save on RAM 1: Save on ROM **Output** DONE : Maintain 1 after first operating STAT : Output the error no. in operation

(1) Give “Homing Parameter Setting” command to the axis designated as the axis of positioning module with BASE (Base no. of Positioning module) and SLOT (Slot no. of Positioning module).

(2) Parameter value modified by homing parameter teaching command and setting RAM/ROM to “0” is valid within power connection. If you want to keep the parameter without power connection, execute homing parameter teaching command with setting RAM/ROM as “1” or save the modified parameter value on FRAM with XPM_WRT (Parameter/Operation Data Saving command) after homing parameter teaching.

(3) Set an axis to command from 1 ~ 4. If you set wrongly, “Error6” arises.

1 ~ 4 : axis1 ~ axis4

(4) When axis is operating, homing parameter teaching command could not execute

(5) The homing parameter items and setting values are as follows.

Setting value	Items	Setting Range
1	Homing position	㎜ : -2147483648 ~ 2147483647 [X10^{-4} ㎜] Inch : -2147483648 ~ 2147483647 [X10^{-5}Inch] degree : -2147483648 ~ 2147483647 [X10^{-5}degree] pulse : -2147483648 ~ 2147483647 [pulse]
2	High speed for homing	㎜ : 1 ~ 2,147,483,647 [X10^{-2} ㎜/min] Inch : 1 ~ 2,147,483,647 [X10^{-3}Inch/min] degree : 1 ~ 2,147,483,647 [X10^{-3} degree/min] pulse : 1 ~ 2,147,483,647 [pulse/sec]
3	Low speed for homing	
4	Homing Acc. Time	0 ~ 2,147,483,647 [ms]
5	Homing Dec. Time	
6	Homing Dwell Time	0 ~ 65,535[ms]
7	Revision amount of origin	㎜ : -2147483648 ~ 2147483647 [X10^{-3} ㎜] Inch : -2147483648 ~ 2147483647 [X10^{-5}Inch] degree : -2147483648 ~ 2147483647 [X10^{-5}degree] pulse : -2147483648 ~ 2147483647 [pulse]
8	Restart time for homing	0 ~ 65,535[ms]
9	Homing mode	0:Near origin/Origin(Off), 1:Near origin/Origin(On), 2:High&Low limit/Origin, 3:Near origin, 4:High speed origin, 5:High/Low limit, 6:Origin
10	Homing direction	0:Forward, 1:Reverse

7.4.4 Manual Operation Parameter Teaching (XPM_SMP)

Form of Function Block	Description
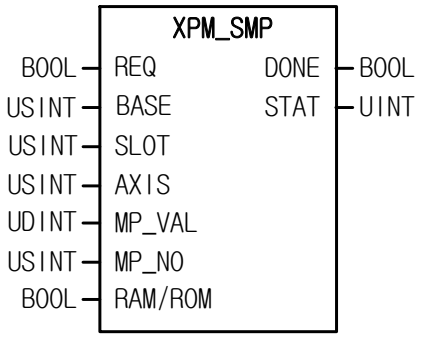	**Input** REQ : Request for execution of function block BASE : Set the base no. with module SLOT : Set the slot no. with module AXIS : Axis to command 1 ~ 4: axis1 ~ axis4 MP_VAL : Manual operation parameter value to modify MP_NO : Item no. of manual operation parameter to modify RAM/ROM : Method for saving parameter 0: Save on RAM 1: Save on ROM **Output** DONE : Maintain 1 after first operation STAT : Output the error no in operation

(1) Give “Manual Operation Parameter Setting” command to the axis designated as the axis of positioning module with BASE (Base no. of Positioning module) and SLOT (Slot no. of Positioning module).

(2) Parameter value modified by manual operation parameter teaching command and setting RAM/ROM to “0” is valid within power connection. If you want to keep the parameter without power connection, execute manual operation parameter teaching command with setting RAM/ROM as “1” or save the modified parameter value on FRAM with XPM_WRT (Parameter/Operation Data Saving command) after manual operation parameter teaching.

(3) Set an axis to command from 1 ~ 4. If you set wrongly, “Error6” arises.

1 ~ 4 : axis1 ~ axis4

(4) When axis is operating, manual operation parameter teaching command could not execute

(5) The manual operation parameter items and setting values are as follows.

Setting Value	Items	Setting Range
1	JOG high speed	㎜ : 1 ~ 2,147,483,647 [X10^{-2} ㎜/min] Inch : 1 ~ 2,147,483,647 [X10^{-3}Inch/min] degree : 1 ~ 2,147,483,647 [X10^{-3} degree/min] pulse : 1 ~ 2,147,483,647 [pulse/sec]
2	JOG low speed	
3	JOG acc. time	0 ~ 2,147,483,647 [ms]
4	JOG dec, time	
5	Inching speed	㎜ : 1 ~ 65,535[X10^{-2} ㎜/min] Inch : 1 ~ 65,535[X10^{-3}Inch/min] degree : 1 ~ 65,535[X10^{-3} degree/min] pulse : 1 ~ 65,535[pulse/sec]

7.4.5 I/O Signal Parameter Teaching(XPM_SIP)

Form of Function Block	Description
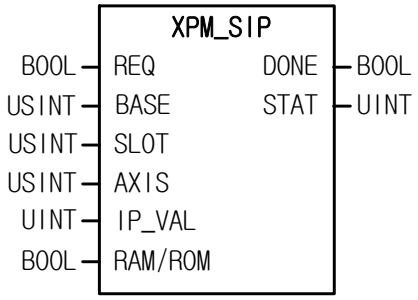	**Input** REQ : Request for execution of function block BASE : Set the base no. with module SLOT : Set the slot no. with module AXIS : Axis to command 1 ~ 4: axis1 ~ axis4 IP_VAL : External signal parameter value to modify Set the corresponding signal for each Bit RAM/ROM : Method for saving parameter 0: Save on RAM 1: Save on ROM **Output** DONE : Maintain 1 after first operation STAT : Output the error no in operation

(1) Give “Input Signal Parameter Setting” command to the axis designated as the axis of positioning module with BASE (Base no. of Positioning module) and SLOT (Slot no. of Positioning module).

(2) Parameter value modified by input signal parameter teaching command and setting RAM/ROM to “0” is valid within power connection. If you want to keep the parameter without power connection, execute input signal parameter teaching command with setting RAM/ROM as “1” or save the modified parameter value on FRAM with XPM_WRT (Parameter/Operation Data Saving command) after input signal parameter teaching.

(3) Set an axis to command from 1 ~ 4. If you set wrongly, “Error6” arises.

1 ~ 4 : axis1 ~ axis4

(4) When axis is operating, I/O signal parameter teaching command could not execute

(5) The setting value of each setting area of external signal has the meaning as below.

0 : A contact, 1 : B contact

(6) The manual operation parameter items and setting values are as follows.

Bit	Signal
0	High limit signal
1	Low limit signal
2	Near origin signal
3	Origin signal
4	Emergent stop/Dec. stop signal
5	Speed/Position control switching siganl
6	Drive ready signal
7	In-position signal
8	Deviation counter clear output signal / Setting position output signal
9 ~ 15	Not Use

7.4.6 Common Parameter Teaching (XPM_SCP)

Form of Function Block	Description
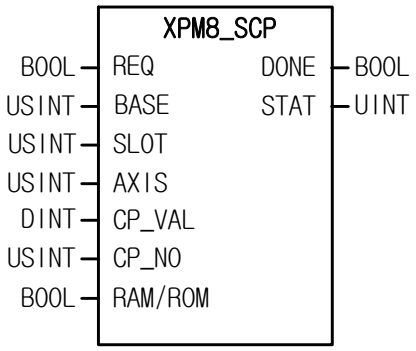	**Input** REQ : Request for execution of function block BASE : Set the base no. with module SLOT : Set the slot no. with module AXIS : Axis to command 1 ~ 4: axis1 ~ axis4 CP_VAL : Common parameter value to modify CP_NO : Item no. of common parameter to modify RAM/ROM : Method for saving parameter 0: Save on RAM 1: Save on ROM **Output** DONE : Maintain 1 after first operation STAT : Output the error no in operation

(1) Give “Common Parameter Setting” command to the axis designated as the axis of positioning module with BASE (Base no. of Positioning module) and SLOT (Slot no. of Positioning module).

(2) Parameter value modified by common parameter teaching command and setting RAM/ROM to “0” is valid within power connection. If you want to keep the parameter without power connection, execute common parameter teaching command with setting RAM/ROM as “1” or save the modified parameter value on FRAM with XPM_WRT (Parameter/Operation Data Saving command) after common parameter teaching.

(3) Set an axis to command from 1 ~ 4. If you set wrongly, “Error6” arises.

1 ~ 4 : axis1 ~ axis4

(4) The common parameter items and setting values are as follows.

Setting Value	Items	Setting values
1	Speed override	0 : % designation, 1 : speed designation
2	Mode for encoder pulse input	0:CW/CCW 1multiply, 1:CW/CCW 2 multiply 2:PULSE/DIR 1 multiply, 3:PULSE/DIR 2 multiply 4:PHASE A/B 1 multiply, 5:PHASE A/B 2 multiply 6:PHASE A/B 4 multiply
3	Maximum value of encoder	-2147483648 ~ 2147283647
4	Minimum value of encoder	
5	Pulse output level	0 : Low Active, 1 : High Active
6	Home fix state after emergency stop	0 : Maintain previous status 1: Home unfixed status
7	Destination coordinates for posistioning speed synchronization	0 : Incremental 1 : Absolute

7.4.7 Operation Data Teaching (XPM_SMD)

Form of Function Block	Description
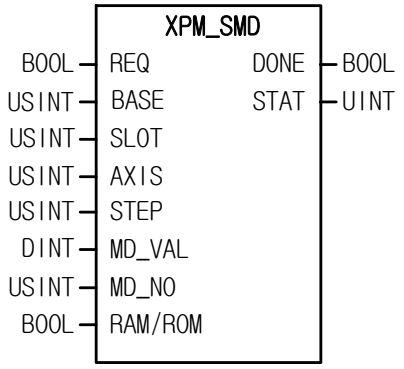	**Input** REQ : Request for execution of function block BASE : Set the base no. with module SLOT : Set the slot no. with module AXIS : Axis to command 1 ~ 4: axis1 ~ axis4 STEP : Step no. to modify 0 ~ 400 MD_VAL : Operation data value to modify MD_NO : Item no. of operation data to modify RAM/ROM : Method for saving parameter 0: Save on RAM 1: Save on ROM **Output** DONE : Maintain 1 after first operation STAT : Output the error no in operation

(1) Give “Operation Data Teaching” command to the axis designated as the axis of positioning module with BASE (Base no. of Positioning module) and SLOT (Slot no. of Positioning module).

(2) Parameter value modified by operation data teaching command and setting RAM/ROM to “0” is valid within power connection. If you want to keep the parameter without power connection, execute operation data teaching command with setting RAM/ROM as “1” or save the modified parameter value on FRAM with XPM_WRT (Parameter/Operation Data Saving command) after operation data teaching.

(3) Set an axis to command from 1 ~ 4. If you set wrongly, “Error6” arises.

1 ~ 4 : axis1 ~ axis4

(4) Operation data teaching command is available to be executed when the axis is operating. But teaching data of operating step do not apply instantly. Operating step data will apply end of present step operation.

(5) The function only use in following software version.

	Version
Position module	More than V1.60
XGK CPU	More than V3.40
XG5000	More than V3.63

(6) The operation data items and setting values are as follows.

Setting value	Items	Setting Range
1	Goal position	㎜ : -2147483648 ~ 2147483647 [X10^{-4} ㎜] Inch : -2147483648 ~ 2147483647 [X10^{-5}Inch] degree : -2147483648 ~ 2147483647 [X10^{-5}degree] pulse : -2147483648 ~ 2147483647 [pulse]
2	Auxiliary position for circular interpolation	
3	Operating speed	㎜ : 1 ~ 2,147,483,647 [X10^{-2} ㎜/min] Inch : 1 ~ 2,147,483,647 [X10^{-3}Inch/min] degree : 1 ~ 2,147,483,647 [X10^{-3} degree/min] pulse : 1 ~ 2,147,483,647 [pulse/sec]
4	Dwell time	0 ~ 65,535[ms]
5	M code no.	0 ~ 65,535
6	Sub axis setting	Bit unit setting Bit 7: axis8, Bit 6: axis7, Bit 5: axis6, Bit 4: axis5, Bit 3: axis4, Bit 2: axis3, Bit 1: axis2, Bit 0: axis1
7	Helical interpolation axis	0, axis1 ~ axis4 (0: General circular interpolation)
8	The no. of turn for circular interpolation	0~65,535
9	Coordinates	0:absolute, 1:relative
10	Control method	0:Abbreviation position control, 1:Abbreviation speed control, 2:Abbreviation Feed control, 3:linear interpolation, 4:circular interpolation
11	Operating method	0:single, 1:repeat
12	Operating pattern	0:end, 1:go on, 2:continue
13	Size of circular arc	0:circular arc<180 1:circular arc>=180
14	Acc. No.	0 ~ 3
15	Dec. No.	0 ~ 3
16	Method of circular interpolation	0:middle point, 1:center point, 2:radius
17	Direction of circular interpolation	0:CW, 1:CCW

7.4.8 Teaching Array (XPM_ATEA)

Form of Function Block	Description
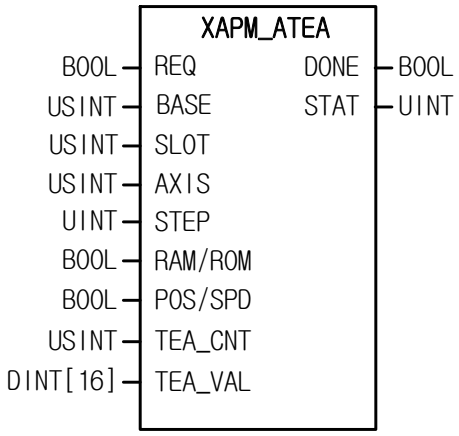	**Input** REQ : Request for execution of function block BASE : Set the base no. with module SLOT : Set the slot no. with module AXIS : Axis to command 1 ~ 4: axis1 ~ axis4 STEP : Set the step no. to do teaching 0 ~ 400 RAM/ROM : Selection of RAM/ROM teaching 0 : RAM teaching, 1 : ROM teaching POS/SPD : Selection of position/speed teaching 0 : Position, 1 : Speed TEA_CNT : Set the no. of data to do teaching 1 ~ 16 TEA_VAL : Set the teaching value **Output** DONE : Maintain 1 after first operation STAT : Output the error no in operation

(1) Give “Teaching Array” command to the axis designated as the axis of positioning module with BASE (Base no. of Positioning module) and SLOT (Slot no. of Positioning module).

(2) Speed teaching is for user to use random speed value in a operation data of specified step and position teaching is for user to use random position value in a operation data of specified operation step.

(3) This command is for modifying maximum 16 goal positions/speed value at once with teaching array function block.

(4) Set an axis to command from 1 ~ 4. If you set wrongly, “Error6” arises.
1 ~ 4 : axis1 ~ axis4

(5) Teaching Array command is available to be executed when the axis is operating. But teaching data of operating step do not apply instantly. Operating step data will apply end of present step operation.

(6) You may set step no.(0~400) of operation data on STEP. If you set wrongly, “Error11” arises.

(7) You may set the no. of data to do teaching on TEA_CNT and do teaching max. 16. If you set wrongly, “Error11” arises.

(8) Parameter value modified by teaching command and setting RAM/ROM as “0” is valid within power connection. If you want to keep the parameter without power connection, execute teaching command with setting “1” on RAM/ROM or save the modified parameter value on FRAM with XPM_WRT (Parameter/Operation Data Saving command) after teaching.

(9) The function only use in following software version.

	Version
Position module	More than V1.60
XGK CPU	More than V3.40
XG5000	More than V3.63

7.4.9 Read Variable Data (XPM_VRD)

Form of Function Block	Description
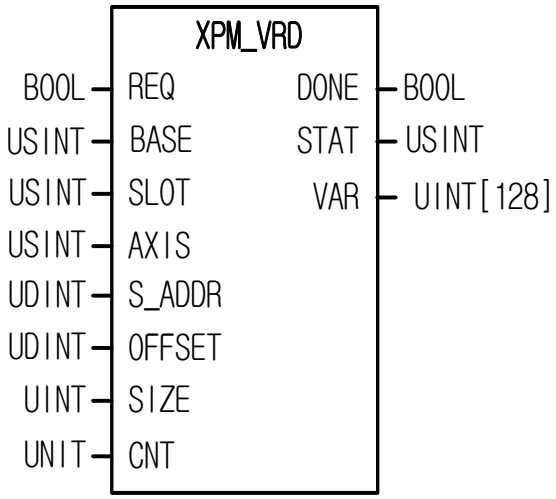	**Input** REQ : Request for execution of function block BASE : Set the base no. with module SLOT : Set the slot no. with module AXIS : Axis to command 1 ~ 4: axis1 ~ axis4 S_ADDR : Module internal memory head address of Read Data 0 ~ 54217 OFFSET : Offset between Read Data blocks 0 ~ 54217 SIZE : Block size of Read data 1 ~ 128 CNT : No. of Read Data block 1 ~ 128 **Output** DONE : Maintain 1 after first operation STAT : Output the error no. in operation VAR : PLC device where Read Data is saved

(1) Gives “Read parameter, operation data, CAM data directly” command to positioning module.

(2) You read data you want by designating module internal memory address of parameter, operation data, CAM data directly.

(3) It reads the positioning module internal memory from the position set by “S_ADDR” by WORD unit and save them in the device set by “VAR”. The number of data to read is the number set by “Size”. In case “CNT” is larger than 2, it reads multiple data blocks and save them in the device set by “VAR” in order. At this time, head address of next block is “Offset” apart from head address of current block.

(4) Max. data size (SIZE x CNT) you can read with one command is 128 WORD.

(5) “Read Variable Data” command can be executed in operation.

(6) You can set axis to command in “AXIS” and the following value is available. If you set other values, error code “6” appears.

1 ~ 4: axis 1 ~ axis 4

(7) In case Read Data size (SIZE x CNT) is 0 or higher than 128 WORD, error code “11” appears in STAT.

7.4.10 Write Variable Data (XPM_VWR)

Form of Function Block	Description
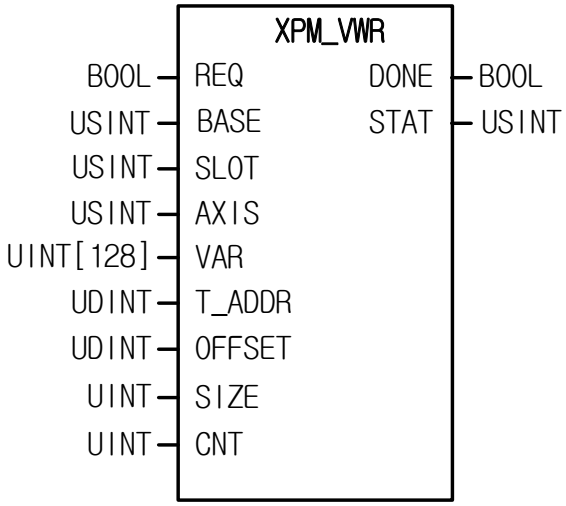	**Input** REQ : Request for execution of function block BASE : Set the base no. with module SLOT : Set the slot no. with module AXIS : Axis to command 1 ~ 4: axis 1 ~ axis 4 VAR : PLC device where Write Data is saved T_ADDR : Module internal memory head address where data is written 0 ~ 54217 OFFSET : Offset between Write data blocks 0 ~ 54217 SIZE : Size of block to write 1 ~ 128 CNT : No. of Write data block 1 ~ 128 **Output** DONE : Maintain 1 after first operation STAT : Output the error no. in operation

(1) Gives “Write parameter, operation data, CAM data directly” command to positioning module.

(2) You can write data you want by designating module internal memory address of parameter, operation data, CAM data directly.

(3) It writes the WORD data in “VAR” to module internal memory. The data are saved from internal memory position set by “T_ADDR” and the number of data is the number set by “Size”. In case the number of block “CNT” is larger than 2, multiple blocks are made. At this time, head address of next block is “Offset” apart from head address of current block.

(4) Max. data size (SIZE x CNT) you can write with one command is 128 WORD.

(5) “Write Variable Data” command can’t be executed in operation.

(6) You can set axis to command in “AXIS” and the following value is available. If you set other values, error code “6” appears.

1 ~ 4: axis 1 ~ axis 4

(7) In case Read Data size (SIZE x CNT) is 0 or higher than 128 WORD, error code “11” appears in STAT

(8) In case no. of block (CNT) is higher than 2, and block offset is smaller than block size, error code “11” appears in STAT because module internal memory block to write is overlapped each other.

7.4.11 Saving Parameter/Operation Data (XPM_WRT)

Form of Function Block	Description
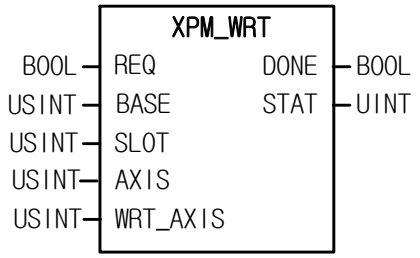	**Input** REQ : Request for execution of function block BASE : Set the base no. with module SLOT : Set the slot no. with module AXIS : Axis to command 1 ~ 4: axis1 ~ axis4 XPM_WRT_AXIS : Saving axis setting (by setting bit) 0bit ~ 3bit: axis1 ~ axis4 **Output** DONE : Maintain 1 after first operation STAT : Output the error no in operation

(1) Give “Basic Parameter Setting” command to the axis designated as the axis of positioning module with BASE (Base no. of positioning module) and SLOT (Slot no. of positioning module).

(2) Set an axis to command from 1 ~ 4. If you set wrongly, “Error6” arises.

1 ~ 4 : axis1 ~ axis4

(3) If function block is executed normally, the current operation parameter and data which saved on WRT_AXIS are saved on FRAM and maintain the data without the power connection.

(4) For setting WRT_AXIS, set each Bit

15 ~ 4 Bit	3Bit	2Bit	1Bit	0Bit
Not Use	Axis 4	Axis 3	Axis 2	Axis 1

If you want to select axis2 and axis3, just set to “16#06”

(5) In case of modifying the CAM data with XPM_VWR instruction, when you execute XPM_WRT, the modified data will be saved in FLASH.

7.5 Start/Stop Function Block

7.5.1 Homing Start (XPM_ORG)

Form of Function Block	Description
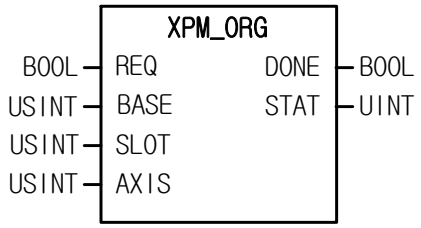	**Input** REQ : Request for execution of function block BASE : Set the base no. with module SLOT : Set the slot no. with module AXIS : Axis to command 1 ~ 4: axis1 ~ axis4 **Output** DONE : Maintain 1 after first operation STAT : Output the error no in operation

(1) This is the command that give homing command to APM module.

(2) This is the command to find the origin of machine by Direction, Correction, Speed, Address and Dwell set on parameter of each axis for homing according to the homing access.

(3) Give “Homing” command to the axis designated as the axis of positioning module with BASE (Base no. of Positioning module) and SLOT (Slot no. of Positioning module).

(4) Set an axis to command from 1 ~ 4. If you set wrongly, “Error6” arises.

1 ~ 4 : axis1 ~ axis4

(5) If homing command is executed normally, it starts homing according to “homing method” of “homing parameter”.

7.5.2 Direct Start (XPM_DST)

Form of Function Block	Description
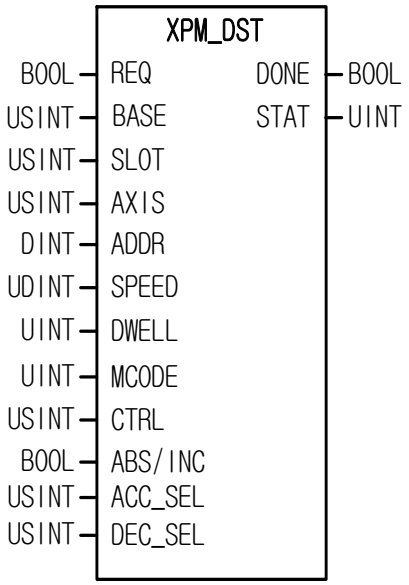	**Input** REQ : Request for execution of function block BASE : Set the base no. with module SLOT : Set the slot no. with module AXIS : Axis to command 1 ~ 4: axis1 ~ axis4 ADDR : Goal position address setting -2147483648 ~ +2147483647 SPEED : Goal speed setting DWELL : Dwell time setting 0 ~ 65535[ms] M code : M code value setting CTRL : Control method setting 0: Position, 1: Speed, 2: Feed ABS/INC: Absolute/Relative coordibates setting 0: Absolute, 1: Relative ACC_SEL: Acc.time no. setting 0: Acc. Time 1, 1: Acc. Time 2 2: Acc. Time 3, 3: Acc. Time 4 DCC_SEL: Dec.time no. setting 0: Dec. time 1, 1: Dec. time 2 2: Dec. time 3, 3: Dec. time 4 **Output** DONE : Maintain 1 after first operation STAT : Output the error no in operation

(1) Give “Direct Start” command to the axis designated as the axis of positioning module with BASE (Base no. of Positioning module) and SLOT (Slot no. of Positioning module).

(2) This is for operating by setting goal position address, operation speed, dwell time, M code, control method, coordinates setting and no. of Acc./Dec time, not by operation data.

(3) Set an axis to command from 1 ~ 4. If you set wrongly, “Error6” arises.

1 ~ 4 : axis1 ~ axis4

(4) If the value set on SPEED, CTRL, TIME_SEL is out of setting range, “Error11” will occur on STAT.

7.5.3 Indirect Start (XPM_IST)

Form of Function Block	Description
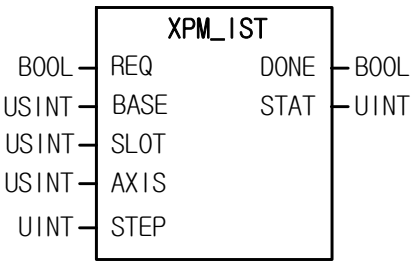	**Input** REQ : Request for execution of function block BASE : Set the base no. with module SLOT : Set the slot no. with module AXIS : Axis to command 1 ~ 4: axis1 ~ axis4 STEP : Set the step no. to do teaching 0 ~ 400 **Output** DONE : Maintain 1 after first operation STAT : Output the error no in operation

(1) Give “Indirect Start” command to the axis designated as the axis of positioning module with BASE (Base no. of Positioning module) and SLOT (Slot no. of Positioning module).

(2) This is for operating by setting operation step no. of axis which set as an operation data.

(3) Set an axis to command from 1 ~ 4. If you set wrongly, “Error6” arises.

1 ~ 4 : axis1 ~ axis4

(4) If the value set on STEP is out of the setting range (0~400), “Error11” arises on STAT.

(5) If set STEP to 0, it operates the current step.

(6) Linear interpolation, circular interpolation and helical interpolation are executed in indirect start by setting the control method.

7.5.4 Ellipse Interpolation (XPM_ELIN)

Form of Function Block	Description
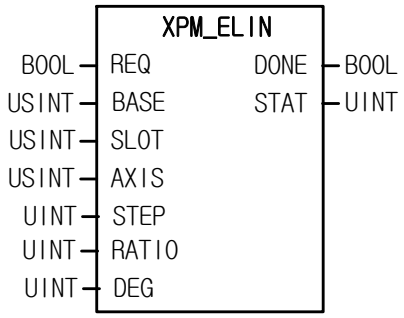	**Input** REQ : Request for execution of function block BASE : Set the base no. with module SLOT : Set the slot no. with module AXIS : Axis to command 1 ~ 4: axis1 ~ axis4 STEP : Step no. to operate RATIO : Ellipse ratio(%) DEG : Operating angle **Output** DONE : Maintain 1 after first operation STAT : Output the error no in operation

(1) Give “Ellipse Interpolation” command to the axis designated as the axis of positioning module with BASE (Base no. of Positioning module) and SLOT (Slot no. of Positioning module).

(2) This is the command that execute ellipse interpolation to the designated step as much as the angle set on DEG in the ratio of it which set on RATIO.

(3) Ellipse interpolation is that distort operation data of the step already set at the rate already set on RATIO to execute ellipse interpolation. Therefore, the step of operation data set on STEP has to be set in accordance with circular interpolation control.

(4) Ellipse rate range from 1 to 65535, it has [X10^{-2} %] as its unit. If you set 65535, the rate will be 655.35%.

(5) Operation angle range from 1 to 65535, it has [X10^{-1} degree] as its unit. If you set 3650, the angle will be 365.0

(6) Set an axis to command from 1 ~ 4. If you set wrongly, “Error6” arises.

1 ~ 4 : axis1 ~ axis4

7.5.5 Simultaneous Start (XPM_SST)

Form of Function Block	Description
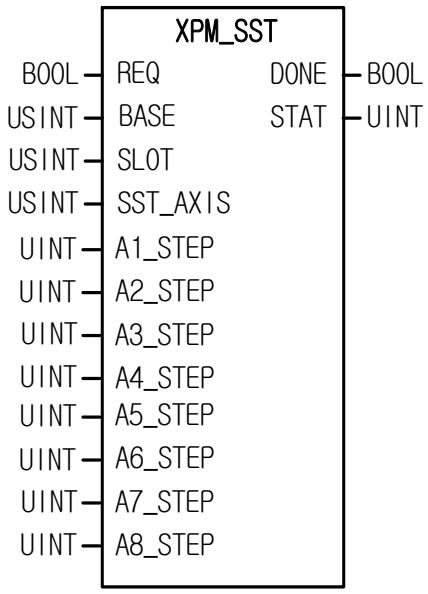	**Input** REQ : Request for execution of function block BASE : Set the base no. with module SLOT : Set the slot no. with module SST_AXIS : Simultaneous axis setting 0bit ~ 3bit: axis1 ~ axis4 Set bit of each axis to select A1_STEP : step no. of axis1 to start A2_STEP : step no. of axis2 to start A3_STEP : step no. of axis3 to start A4_STEP : step no. of axis4 to start A5_STEP : Not use A6_STEP : Not use A7_STEP : Not use A8_STEP : Not use **Output** DONE : Maintain 1 after first operation STAT : Output the error no in operation

(1) Give “Simultaneous Start” command to the axis designated as the axis of positioning module with BASE (Base no. of Positioning module) and SLOT (Slot no. of Positioning module).

(2) This is for starting more than 2axis at once.

(3) If you set a value out of setting range, “Error6” arises. Set with each bit as follows.

7bit	6bit	5bit	4bit	3bit	2bit	1bit	0bit
-	-	-	-	Axis4	Axis3	Axis2	Axis1

(4) Set the step no. of each axis to execute simultaneous start on A1_STEP ~ A4_STEP.

7.5.6 Point Start (XPM_PST)

Form of Function Block	Description
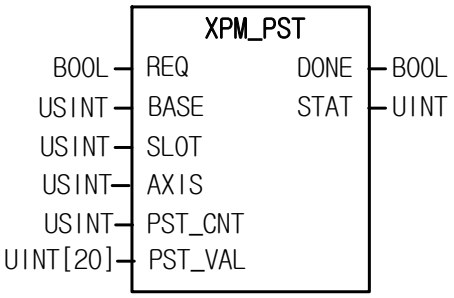	**Input** REQ : Request for execution of function block BASE : Set the base no. with module SLOT : Set the slot no. with module AXIS : Axis to command 1 ~ 4: axis1 ~ axis4 PST_CMT : Set the no. of step for point operation 1 ~ 20 PST_VAL : Set the step no. for point operation 0 ~ 400 **Output** DONE : Maintain 1 after first operation STAT : Output the error no in operation

(1) Give “Point start” command to the axis designated as the axis of positioning module with BASE (Base no. of Positioning module) and SLOT (Slot no. of Positioning module).

(2) Set the axis to command and it may be set as follows. If you set a value out of range, “Error6” arises.

(3) This is for when operating PTP(Point to Point), operate continuously by setting max. 20 operation steps.

(4) Point operation may be executed with max. 20 point steps. Therefore, you may use the parameter which has 20 elements and like UNIT arrangement.

7.5.7 Deceleration Stop (XPM_STP)

Form of Function Block	Description
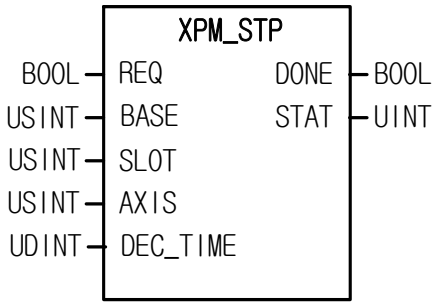	**Input** REQ : Request for execution of function block BASE : Set the base no. with module SLOT : Set the slot no. with module AXIS : Axis to command 1 ~ 4: axis1 ~ axis4 DEC_TIME : Decelerating stop time 0: Acc./Dec. time applied when start operating 1 ~ 2147483647: 1 ~ 2147483647ms **Output** DONE : Maintain 1 after first operation STAT : Output the error no in operation

(1) Give “Decelerating Stop” command to the axis designated as the axis of positioning module with BASE (Base no. of Positioning module) and SLOT (Slot no. of Positioning module).

(2) If receive the stop command by operation data, it will stop operating and continue to operate by start command.

(3) If “Decelerating Stop” is executed in speed/position synchronization or CAM operation, speed/position synchronization or CAM operation will stop depending on the state of the current operation control.

(4) “Decelerating Stop” may be executed in not only acc./dec. area but also steady speed area.

(5) Deceleration time means the time between the point of start decelerating and the point of stop and may be set to 0 ~ 2,147,483,647ms. But, if it is set to “0”, it will stop by the time set at the starting of operation.

(6) Deceleraing time means the time between the speed limit of basic parameter and stop.

(7) Set an axis to command from 1 ~ 4. If you set wrongly, “Error6” arises.

1 ~ 4 : axis1 ~ axis4

7.5.8. Emergency Stop (XPM_EMG)

Form of Function Block	Description
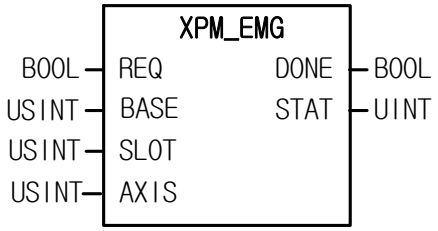	**Input** REQ : Request for execution of function block BASE : Set the base no. with module SLOT : Set the slot no. with module AXIS : Axis to command 1 ~ 4: aixs1 ~ axis4 **Output** DONE : Maintain 1 after first operating STAT : Output the error no. in operation

(1) Give “Emergency Stop” command to the axis designated as the axis of positioning module with BASE (Base no. of Positioning module) and SLOT (Slot no. of Positioning module).

(2) This command is for immediate stop. The axis to execute this command will stop.

(3) Dec. time of emergent stop is the time set on “Dec. time of Emergent stop” of basic parameter.

(4) Set an axis to command from 1 ~ 4. If you set wrongly, “Error6” arises.

1 ~ 4 : axis1 ~ axis4

7.5.9. Restart (XPM_RSTR)

Form of Function Block	Description
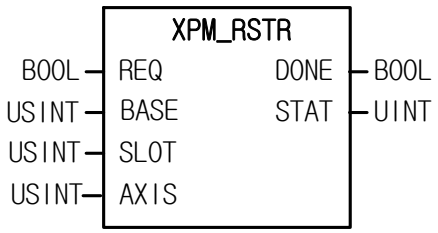	**Input** REQ : Request for execution of function block BASE : Set the base no. with module SLOT : Set the slot no. with module AXIS : Axis to command 1 ~ 4: aixs1 ~ axis4 **Output** DONE : Maintain 1 after first operating STAT : Output the error no. in operation

(1) Give “Restart” command to the axis of positioning module designated by BASE (Base no. of Positioning module) and SLOT (Slot no. of Positioning module).

(2) This command is used when restarting the axis which stops by EMG stop command. If this command is executed, the axis operates again with previous operating information.

(3) If you start the axis with commands other than “Restart” after it stops with DEC. stop, “Restart” will not be executed

(4) Set an axis to command from 1 ~ 4. If you set wrongly, “Error6” arises.

1 ~ 4: axis1 ~ axis4

(5) The function only use in following software version.

	Version
Position module	More than V1.40
XGK CPU	More than V3.80
XG5000	More than V3.62

7.5.10 Setting Position Output Enable/Disable (XPM_POE)

Form of Function Block	Description
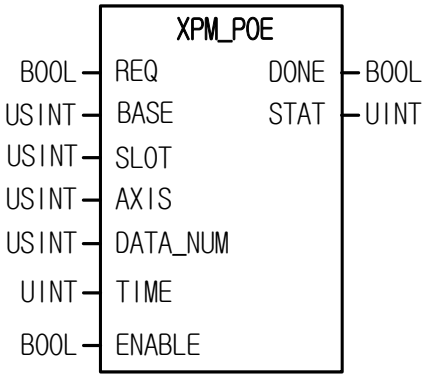	**Input** REQ : Request for execution of function block BASE : Set the base no. with module SLOT : Set the slot no. with module AXIS : Axis to command 1~4 : :axis1 ~ axis4 DATA_NUM : Position data no. of set position output. (0~50) TIME : Output signal keeping time (Unit: ms) 0~65535ms ENABLE : Enable/Disable 0: Disable, 1: Enable **Output** DONE : Maintain 1 after first operating STAT : Output the error no. in operation

(1) Give “Setting Position Output Enable/Disable” command to the axis of positioning module designated by BASE (Base no. of Positioning module) and SLOT (Slot no. of Positioning module)

(2) If setting position signal output enable and current position is on set position area, signal will be output from the deviation counter clear/setting position signal output pin.

(3) Set the number of set position of setting position signal output on DATA_NUM. Data number can set following value. If you set wrongly, “Error11” arises

0 ~ 50 (If the number of data is set to 0, setting position signal output is disable)

(4) Setting position signal output is keeping during set TIME

(5) When execute the setting position signal output function on disable of ENABLE, current output signal will be turn off instantly.

(6) Set an axis to command from 1 ~ 4. If you set wrongly, “Error6” arises.

1 ~ 4: axis1 ~ axis4

(7) The function only use in following software version.

	Version
Position module	More than V1.50
XGK CPU	More than V3.80
XG5000	More than V3.63

7.6 Manual Operation Function Block

7.6.1 JOG Operation (XPM_JOG)

Form of Function Block	Description
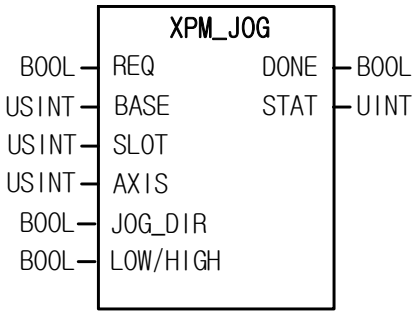	**Input** REQ : Request for execution of function block BASE : Set the base no. with module SLOT : Set the slot no. with module AXIS : Axis to command 1 ~ 4: aixs1 ~ axis4 JOG_DIR : Set the direction of JOG operation 0:Forward, 1:Reverse LOW/HIGH : Set the speed of JOG operation 0:Low speed, 1:High speed **Output** DONE : Maintain 1 after first operating STAT : Output the error no. in operation

(1) Give “JOG Operation” command to the axis designated as the axis of positioning module with BASE (Base no. of Positioning module) and SLOT (Slot no. of Positioning module).

(2) This command is for checking operation of system, wiring and address for teaching. It may be used in High/Low speed.

(3) The operating condition of JOG operation function block is Level type. That is, when the condition of input parameter (REQ) is ON, pulse is outputted by setting value.

(4) If the value of LOW/HIGH is changed, the speed will be changed without stop and if the value of JOG_DIR is changed, it will change the direction after decelerating stop.

(5) Set an axis to command from 1 ~ 4. If you set wrongly, “Error6” arises.

1 ~ 4 : axis1 ~ axis4

7.6.2 Inching Operation (XPM_INC)

Form of Function Block	Description
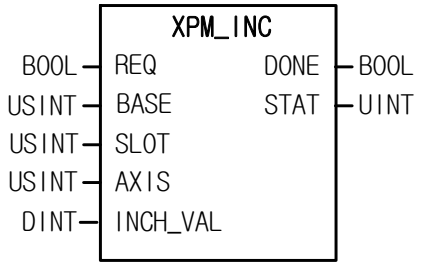	**Input** REQ : Request for execution of function block BASE : Set the base no. with module SLOT : Set the slot no. with module AXIS : Axis to command 1 ~ 4: aixs1 ~ axis4 INCH_VAL: Amount of movement by Inching Operation -2,147,483,648 ~ 2,147,483,647 **Output** DONE : Maintain 1 after first operating STAT : Output the error no. in operation

(1) Give “Inching Operation” command to the axis designated as the axis of positioning module with BASE (Base no. of Positioning module) and SLOT (Slot no. of Positioning module).

(2) This command is a kind of manual operation for process a minute movement as an operation of fixed amount.

(3) Speed of inching operation is set on manual operation parameter.

(4) Set an axis to command from 1 ~ 4. If you set wrongly, “Error6” arises.

1 ~ 4 : axis1 ~ axis4

7.6.3 Returning to Previous Manual Operation Position (XPM_RTP)

Form of Function Block	Description
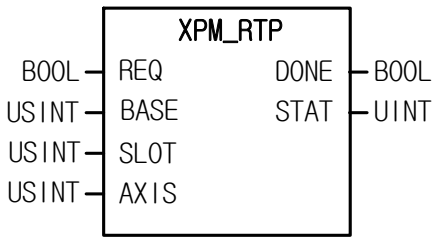	**Input** REQ : Request for execution of function block BASE : Set the base no. with module SLOT : Set the slot no. with module AXIS : Axis to command 1 ~ 4: aixs1 ~ axis4 **Output** DONE : Maintain 1 after first operating STAT : Output the error no. in operation

(1) Give “Returning to previous manual operation” command to the axis designated as the axis of positioning module with BASE (Base no. of Positioning module) and SLOT (Slot no. of Positioning module).

(2) When the position is changed by manual operation, this command may move the axis to previous manual operation position.

(3) Set an axis to command from 1 ~ 4. If you set wrongly, “Error6” arises.

1 ~ 4 : axis1 ~ axis4

7.7 Synchronization Start Function Blocks

7.7.1 Position Synchronization (XPM_SSP)

Form of Function Block	Description
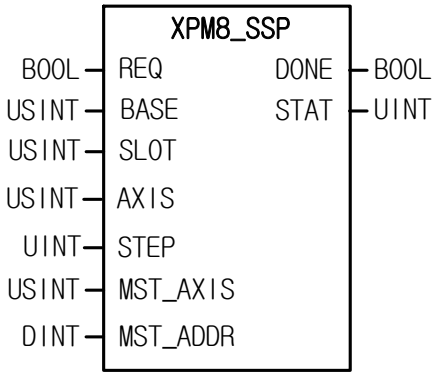	**Input** REQ : Request for execution of function block BASE : Set the base no. with module SLOT : Set the slot no. with module AXIS : Axis to command 1 ~ 4: aixs1 ~ axis4 STEP : Step no. to operate 0 ~ 400 MST_AXIS : Set the main axis 1 ~ 4: axis1 ~ axis4, 9: Encoder MST_ADDR : Set the position of main axis -2,147,483,648 ~ 2,147,483,647 **Output** DONE : Maintain 1 after first operating STAT : Output the error no. in operation

(1) Give “Synchronization Start” command to the axis designated as the axis of positioning module with BASE (Base no. of Positioning module) and SLOT (Slot no. of Positioning module).

(2) Operate operation step set by command axis after main axis comes to the position of synchronization.

(3) Set an axis to command from 1 ~ 4. If you set wrongly, “Error6” arises.

1 ~ 4 : axis1 ~ axis4

(4) You may set the main axis on MST_AXIS with following values. If you set wrongly, “Error6” arises.
1 ~ 4 : axis1 ~ axis4, 9 : Encoder

7.7.2 Speed Synchronization (XPM_SSS)

Form of Function Block	Description
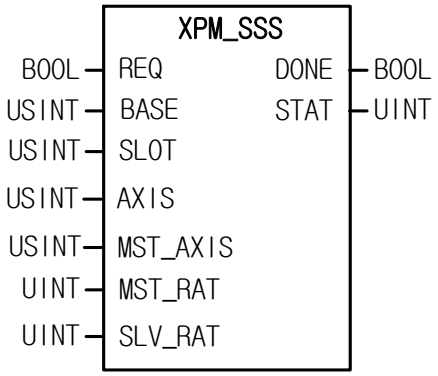	**Input** REQ : Request for execution of function block BASE : Set the base no. with module SLOT : Set the slot no. with module AXIS : Axis to command 1 ~ 4: aixs1 ~ axis4 MST_AXIS : Set main axis 1 ~ 4: axis1 ~ axis4, 9: Encoder MST_RAT : Set speed rate of main axis -32768 ~ 32767 SLV_RAT : Set speed rate of sub axis -32768 ~ 32767 **Output** DONE : Maintain 1 after first operating STAT : Output the error no. in operation

(1) Give “Speed Synchronization” command to the axis designated as the axis of positioning module with BASE (Base no. of Positioning module) and SLOT (Slot no. of Positioning module).

(2) This command is for operating at the operation speed ratio between main axis and subordinate axis.

(3) There is no rule about size of the speed ratio between main/sub axis. If the speed ratio of main axis is bigger than sub’s, the main axis will move faster than sub axis. If the speed ratio of sub axis is bigger than main’s, the sub axis moves faster than main.

(4) Set an axis to command from 1 ~ 4. If you set wrongly, “Error6” arises.
1 ~ 4 : axis1 ~ axis4

(5) You may set the main axis on MST_AXIS with following values. If you set wrongly, “Error6” arises.
1 ~ 4 : axis1 ~ axis4, 9 : Encoder

(6) The operating direction of subordinate depends on speed synchronization ratio $(\frac{Sub}{Main})$. If it is positive, operate in direction of main axis. If it is negative, operate in reverse direction of main axis.

7.7.3 Position Assigned Speed Synchronization (XPM_SSSP)

Form of Function Block	Description
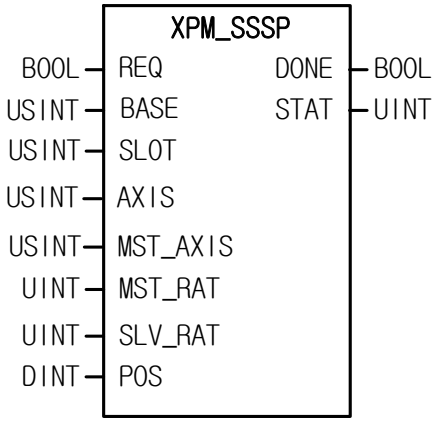	**Input** REQ : Request for execution of function block BASE : Set the base no. with module SLOT : Set the slot no. with module AXIS : Axis to command 1 ~ 4: aixs1 ~ axis4 MST_AXIS : Set main axis 1 ~ 4: axis1 ~ axis4, 9: Encoder MST_RAT : Set speed rate of main axis -32768 ~ 32767 SLV_RAT : Set speed rate of sub axis -32768 ~ 32767 POS : Goal position -2,147,483,648 ~ 2,147,483,647 **Output** DONE : Maintain 1 after first operating STAT : Output the error no. in operation

(1) Give “Position Assigned Speed Synchronization” command to the axis designated as the axis of positioning module with BASE (Base no. of Positioning module) and SLOT (Slot no. of Positioning module).

(2) This command is for operating at the operation speed ratio between main axis and subordinate axis. It stops operating when the position of sub axis come to the position set on POS.

(3) There is no rule about size of the speed ratio between main/sub axis. If the speed ratio of main axis is bigger than sub’s, the main axis will move faster than sub. If the speed ratio of sub axis is bigger than main’s, the sub axis moves faster than main.

(4) Set an axis to command from 1 ~ 4. If you set wrongly, “Error6” arises.
1 ~ 4 : axis1 ~ axis4

(5) You may set the main axis on MST_AXIS with following values. If you set wrongly, “Error6” arises.
1 ~ 4 : axis1 ~ axis4, 9 : Encoder

(6) The operating direction of subordinate depends on speed synchronization ratio $(\frac{Sub}{Main})$. If it is positive, operate in direction of main axis. If it is negative, operate in reverse direction of main axis.

7.7.4 CAM Operation (XPM_CAM)

Form of Function Block	Description
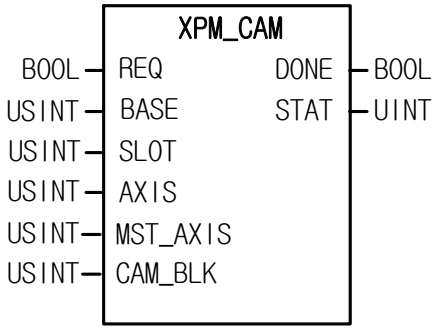	**Input** REQ : Request for execution of function block BASE : Set the base no. with module SLOT : Set the slot no. with module AXIS : Axis to command 1 ~ 4: aixs1 ~ axis4 MST_AXIS : Set main axis 1 ~ 4: axis1 ~ axis4, 9: Encoder CAM_BLK : Set CAM block 1 ~ 9: Block1 ~ Block9 **Output** DONE : Maintain 1 after first operating STAT : Output the error no. in operation

(1) Give “CAM Operation” command to the axis designated as the axis of positioning module with BASE (Base no. of Positioning module) and SLOT (Slot no. of Positioning module).

(2) Execute CAM operation with CAM main axis and CAM data block.

(3) When executing CAM operation, sub axis is indicated that it is in operation but it does not work actually. When main axis starts, the motor starts working according to the data value of CAM data block which already set on CAM block (CAM_BLK)

(4) Set an axis to command from 1 ~ 4. If you set wrongly, “Error6” arises.

1 ~ 4 : axis1 ~ axis4

(5) Set main axis of CAM operation at MST_AXIS and available value is as follows. In case other values are set, “Error 11” occurs.

1 ~ 4 : axis1 ~ axis4, 9: Encoder

(6) Set CAM block number in CAM_BLK and available value is as follows. In case other values are set, “Error 11” occurs.

1 ~ 9 : block1 ~ block9

(7) CAM data may be set on positioning package and you may set maximum 8 blocks. (block1 ~ block8)

(8) In order to use user CAM operation, you have to set CAM block number as 9.

(9) User CAM operation available change the user CAM data with “Write Variable Data” command in operation.

(10) For detailed information on user CAM operation, refer to “9.4.4 user CAM operation”

(11) The function only use in following software version.

	Version
Position module	More than V1.40
XGK CPU	More than V3.40
XG5000	More than V3.63

7.7.5 Main Axis Offset-specified CAM Operation (XPM_CAMO)

Form of Function Block	Description
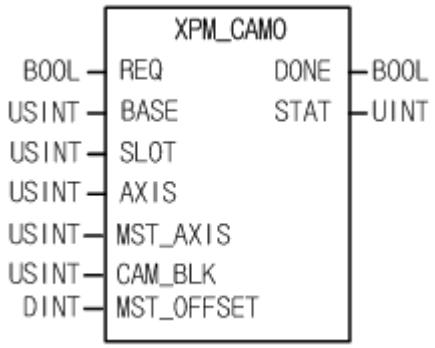	**Input** REQ : Request for execution of function block BASE : Set the base no. with module SLOT : Set the slot no. with module AXIS : Axis to command 1 ~ 8: aixs1 ~ axis8 MST_AXIS : Set main axis 1 ~ 8: axis1 ~ axis8, 9: Encoder1, 10: Encoder2 CAM_BLK : Set CAM block 1 ~ 9: Block1 ~ Block9 MST_OFFSET: main offset transfer amount setting -2147483648 ~ 2147483647 **Output** DONE : Maintain 1 after first operating STAT : Output the error no. in operation

(1) Give “Main Axis Offset-specified CAM Operation” command to the axis designated as the axis of positioning module with BASE (Base no. of Positioning module) and SLOT (Slot no. of Positioning module).

(2) Execute CAM operation with CAM main axis and CAM data block.

(3) When executing CAM operation, sub axis is indicated that it is in operation but it does not work actually. If main axis starts and moves as far as transfer amount set in the MST OFFSET, the motor starts working according to the data value of CAM data block which already set on CAM block (CAM_BLK)

(4) Set an axis to command from 1 ~ 8. If you set wrongly, “Error6” arises.

1 ~ 8 : axis1 ~ axis8

(5) Set main axis of CAM operation at MST_AXIS and available value is as follows. In case other values are set, “Error 11” occurs.

1 ~ 8 : axis1 ~ axis8, 9: Encoder1, 10: Encoder2

(6) Set CAM block number in CAM_BLK and available value is as follows. In case other values are set, “Error 11” occurs.

1 ~ 9 : block1 ~ block9

(7) CAM data may be set on positioning package and you may set maximum 8 blocks (block1~block8).

7.8 Modification Function Block

7.8.1 Position Override (XPM_POR)

Form of Function Block	Description
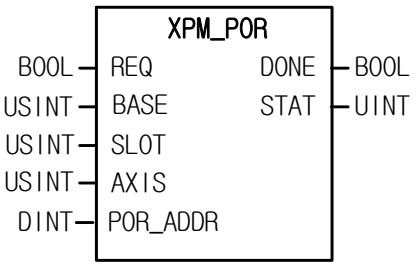	**Input** REQ : Request for execution of function block BASE : Set the base no. with module SLOT : Set the slot no. with module AXIS : Axis to command 1 ~ 4: aixs1 ~ axis4 POR_ADDR : Set a new goal position -2,147,483,648 ~ 2,147,483,647 **Output** DONE : Maintain 1 after first operating STAT : Output the error no. in operation

(1) Give “Position Override” command to the axis designated as the axis of positioning module with BASE (Base no. of Positioning module) and SLOT (Slot no. of Positioning module).

(2) This command is for changing the goal position in operation.

(3) If execute position override after pass the position to execute position override, it will stop at the current position and turn back to the position set on POR_ADDR.

(4) Set the goal position to modify on POR_ADDR.’

(5) Override position set on position override is absolute coordinates.

(6) Set an axis to command from 1 ~ 4. If you set wrongly, “Error6” arises.

1 ~ 4 : axis1 ~ axis4

7.8.2 Speed Override (XPM_SOR)

Form of Function Block	Description
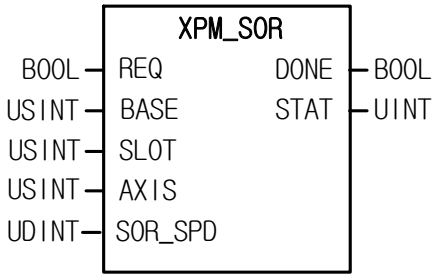	**Input** REQ : Request for execution of function block BASE : Set the base no. with module SLOT : Set the slot no. with module AXIS : Axis to command 1 ~ 4: aixs1 ~ axis4 SOR_SPD : Set a new operaion speed value **Output** DONE : Maintain 1 after first operating STAT : Output the error no. in operation

(1) Give “Speed Override” command to the axis designated as the axis of positioning module with BASE (Base no. of Positioning module) and SLOT (Slot no. of Positioning module).

(2) This command is for changing the operating speed in operation.

(3) It may be set to “%” or “Speed value (unit/time)” according to “Speed Override” value of common parameter.

(4) If unit of Speed override is %, setting range is from 1 to 65,535. It means 0.01% ~ 655.35%.

(5) If unit of speed override is speed value, the setting range is from 1 to speed limit. The speed limit is the value set on “Speed Limit” item of basic parameter and the unit of speed override is the same as unit of axis.

(6) Set an axis to command from 1 ~ 4. If you set wrongly, “Error6” arises.

1 ~ 4 : axis1 ~ axis4

7.8.3 Position Assigned Speed Override (XPM_PSO)

Form of Function Block	Description
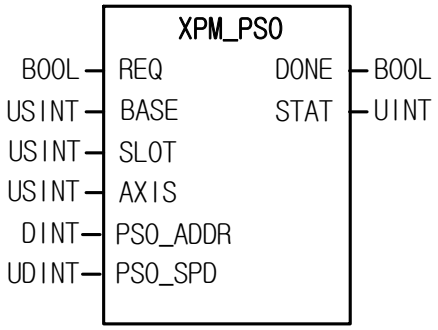	**Input** REQ : Request for execution of function block BASE : Set the base no. with module SLOT : Set the slot no. with module AXIS : Axis to command 1 ~ 4: aixs1 ~ axis4 PSO_ADDR : The position to change speed -2,147,483,648 ~ 2,147,483,647 PSO_SPD : Set new speed value **Output** DONE : Maintain 1 after first operating STAT : Output the error no. in operation

(1) Give “Position Assigned Speed Override” command to the axis designated as the axis of positioning module with BASE (Base no. of Positioning module) and SLOT (Slot no. of Positioning module).

(2) This command is for changing operating speed in operation after command axis arrive at definite position.

(3) The speed value set on PSO_SPD will be “% Designation” or “Speed value Designation” depending on the value set on “Speed Override” of common parameter.

(4) If unit of speed value is %, the setting range is from 1 ~ 65,535 and it means 0.01% ~ 655.35%.

(5) Set an axis to command from 1 ~ 4. If you set wrongly, “Error6” arises.

1 ~ 4 : axis1 ~ axis4

7.8.4 Position/Speed Switching Control (XPM_PTV)

Form of Function Block	Description
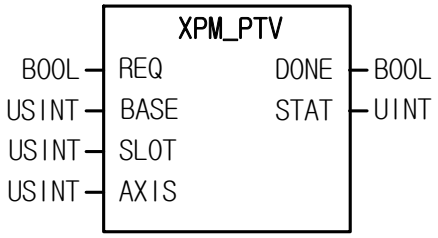	**Input** REQ : Request for execution of function block BASE : Set the base no. with module SLOT : Set the slot no. with module AXIS : Axis to command 1 ~ 4: aixs1 ~ axis4 **Output** DONE : Maintain 1 after first operating STAT : Output the error no. in operation

(1) Give “Position/Speed Switching Control” command to the axis designated as the axis of positioning module with BASE (Base no. of Positioning module) and SLOT (Slot no. of Positioning module).

(2) When the designated axis is in positioning control operation, if it receives position/speed control switching command, positioning control operation will be changed into speed control operation and continues to operate until stop command.

(3) Once the command is executed, origin would not be assigned and then operate in speed control.

(4) Set an axis to command from 1 ~ 4. If you set wrongly, “Error6” arises.

1 ~ 4 : axis1 ~ axis4

7.8.5 Speed/Position Switching Control (XPM_VTP)

Form of Function Block	Description
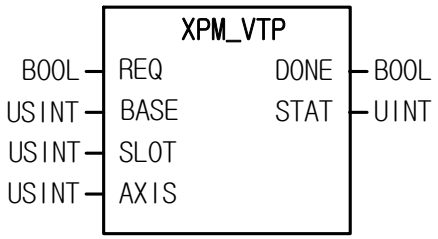	**Input** REQ : Request for execution of function block BASE : Set the base no. with module SLOT : Set the slot no. with module AXIS : Axis to command 1 ~ 4: aixs1 ~ axis4 **Output** DONE : Maintain 1 after first operating STAT : Output the error no. in operation

(1) Give “Speed/Position Switching Control” command to the axis designated as the axis of positioning module with BASE (Base no. of Positioning module) and SLOT (Slot no. of Positioning module).

(2) When the designated axis receives speed/position control switching command in speed control operation, speed control will be changed to position control and keep operating by the position value at the beginning.

(3) Set an axis to command from 1 ~ 4. If you set wrongly, “Error6” arises.

1 ~ 4 : axis1 ~ axis4

7.8.6 Position-specified Speed/Position Switching Control (XPM_VTPP)

Form of Function Block	Description
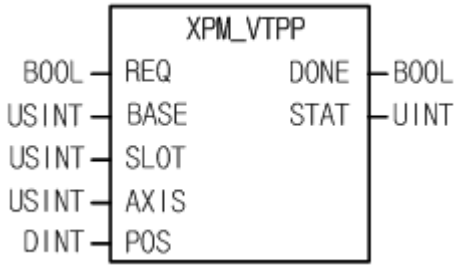	**Input** REQ : Request for execution of function block BASE : Set the base no. with module SLOT : Set the slot no. with module AXIS : Axis to command 1 ~ 4: aixs1 ~ axis4 POS: transfer amount -2,147,483,648 ~ 2,147,483,647 **Output** DONE : Maintain 1 after first operating STAT : Output the error no. in operation

(1) Give “Position-specified Speed/Position Switching Control” command to the axis designated as the axis of positioning module with BASE (Base no. of Positioning module) and SLOT (Slot no. of Positioning module).

(2) When the designated axis receives speed/position control switching command in speed control operation, speed control will be changed to position control and moves by transfer amount set in POS.

(3) Set an axis to command from 1 ~ 4. If you set wrongly, “Error6” arises.

1 ~ 4 : axis1 ~ axis4

7.8.7 Skip Operation (XPM_SKP)

Form of Function Block	Description
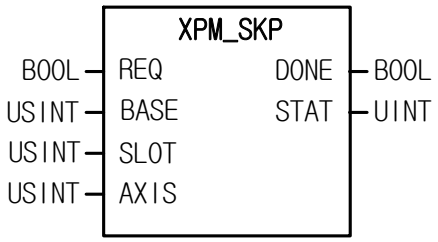	**Input** REQ : Request for execution of function block BASE : Set the base no. with module SLOT : Set the slot no. with module AXIS : Axis to command 1 ~ 4: aixs1 ~ axis4 **Output** DONE : Maintain 1 after first operating STAT : Output the error no. in operation

(1) Give “Skip Operation” command to the axis designated as the axis of positioning module with BASE (Base no. of Positioning module) and SLOT (Slot no. of Positioning module).

(2) This command is for operating the next step. That is, stop operating of the current step and then start operating the next step.

(3) Skip a step at once.

(4) Set an axis to command from 1 ~ 4. If you set wrongly, “Error6” arises.

1 ~ 4 : axis1 ~ axis4

7.8.8 Continuous Operation (XPM_NMV)

Form of Function Block	Description
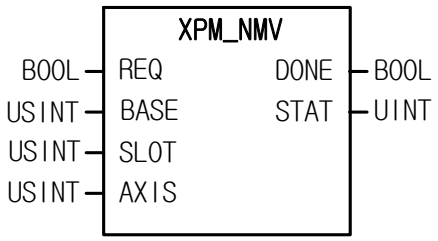	**Input** REQ : Request for execution of function block BASE : Set the base no. with module SLOT : Set the slot no. with module AXIS : Axis to command 1 ~ 4: aixs1 ~ axis4 **Output** DONE : Maintain 1 after first operating STAT : Output the error no. in operation

(1) Give “Continuous Operation” command to the axis designated as the axis of positioning module with BASE (Base no. of Positioning module) and SLOT (Slot no. of Positioning module).

(2) This command is for command axis to continue to operate the next step without stop.

(3) If this command is executed, the current step no. would be changed to the next step no. and continue to execute positioning operation at the next step speed to the goal position.

(4) Continuous Operation command only changes the current operation pattern, not changes operation data.

(5) Set an axis to command from 1 ~ 4. If you set wrongly, “Error6” arises.

1 ~ 4 : axis1 ~ axis4

7.8.9 Start Step Number Change (XPM_SNS)

Form of Function Block	Description
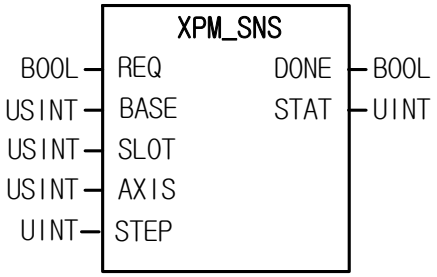	**Input** REQ : Request for execution of function block BASE : Set the base no. with module SLOT : Set the slot no. with module AXIS : Axis to command 1 ~ 4: aixs1 ~ axis4 STEP : Set the operation step no. to operate 1 ~ 400 **Output** DONE : Maintain 1 after first operating STAT : Output the error no. in operation

(1) Give “Start Step no. Change” command to the axis designated as the axis of positioning module with BASE (Base no. of Positioning module) and SLOT (Slot no. of Positioning module).

(2) This command is for changing the operation step of command axis.

(3) Set an axis to command from 1 ~ 4. If you set wrongly, “Error6” arises.

1 ~ 4 : axis1 ~ axis4

(4) Set the step no. on STEP. The setting range is 1 ~ 400, if you set the setting value wrongly, “Error11” arises.

7.8.10 Repeat Step No. Change (XPM_SRS)

Form of Function Block	Description
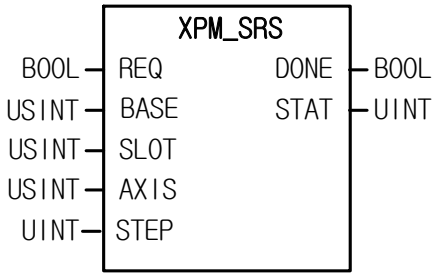	**Input** REQ : Request for execution of function block BASE : Set the base no. with module SLOT : Set the slot no. with module AXIS : Axis to command 1 ~ 4: aixs1 ~ axis4 STEP : Set the repeat step no. to change 1 ~ 400 **Output** DONE : Maintain 1 after first operating STAT : Output the error no. in operation

(1) Give “Repeat Step no. Change” command to the axis designated as the axis of positioning module with BASE (Base no. of Positioning module) and SLOT (Slot no. of Positioning module).

(2) This command is for designating the starting step no. of repeat operation and operating from the designated operation step.

(3) Set an axis to command from 1 ~ 4. If you set wrongly, “Error6” arises.

1 ~ 4 : axis1 ~ axis4

(4) Set the step no. to operate repeatedly on STEP. The setting range is 1 ~ 400, if you set the setting value wrongly, “Error11” arises.

7.8.11 Current Position Change (XPM_PRS)

Form of Function Block	Description
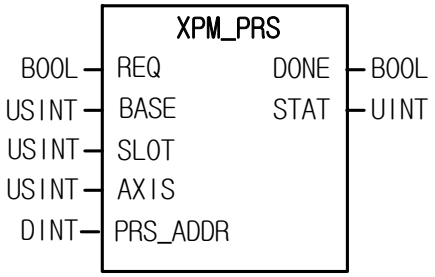	**Input** REQ : Request for execution of function block BASE : Set the base no. with module SLOT : Set the slot no. with module AXIS : Axis to command 1 ~ 4: aixs1 ~ axis4 PRS_ADDR : Set the current position value to change. -2,147,483,648 ~ 2,147,483,647 **Output** DONE : Maintain 1 after first operating STAT : Output the error no. in operation

(1) Give “Basic Parameter Setting” command to the axis designated as the axis of positioning module with BASE (Base no. of Positioning module) and SLOT (Slot no. of Positioning module).

(2) This command is for changing the current position to random position. If it is executed in the state of non-origin, the origin signal would be On and the current position would be set as setting value (PRS_ADDR).

(3) Set an axis to command from 1 ~ 4. If you set wrongly, “Error6” arises.

1 ~ 4 : axis1 ~ axis4

7.8.12 Encoder Value Preset (XPM_EPRE)

Form of Function Block	Description
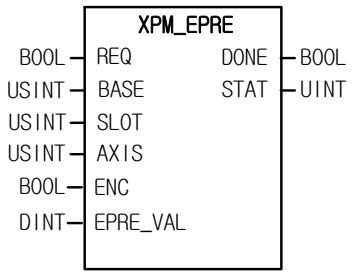	**Input** REQ : Request for execution of function block BASE : Set the base no. with module SLOT : Set the slot no. with module AXIS : Axis to command 1 ~ 4: aixs1 ~ axis4 ENC : Encoder no. (Always 0) 0: Encoder EPRE_VAL : Set the value of encoder preset -2147483648 ~ 2147483647 **Output** DONE : Maintain 1 after first operating STAT : Output the error no. in operation

(1) Give “Encoder Preset” command to the axis designated as the axis of positioning module with BASE (Base no. of Positioning module) and SLOT (Slot no. of Positioning module).

(2) This command is for changing the current value of encoder to the value set on EPRE_VAL

(3) Set the encoder to preset on ENC and it has to be 0 in APM module of XPM.

(4) Set an axis to command from 1 ~ 4. If you set wrongly, “Error6” arises.

1 ~ 4 : axis1 ~ axis4

7.9 Error Function blocks

7.9.1 Error Reset (XPM_RST)

Form of Function Block	Description
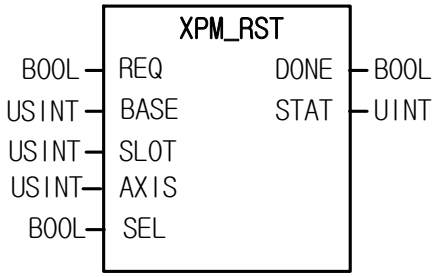	**Input** REQ : Request for execution of function block BASE : Set the base no. with module SLOT : Set the slot no. with module AXIS : Axis to command 1 ~ 4: aixs1 ~ axis4 SEL : Select axis error/common error 0:axis error (Always 0) **Output** DONE : Maintain 1 after first operating STAT : Output the error no. in operation

(1) Give “Error Reset” command to the axis designated as the axis of positioning module with BASE (Base no. of Positioning module) and SLOT (Slot no. of Positioning module).

(2) Set an axis to command from 1 ~ 4. If you set wrongly, “Error6” arises.

1 ~ 4 : axis1 ~ axis4

(3) This is for resetting the errors.

(4) Select the kind of error to reset on SEL. If it is set to 0, reset the errors of each axis. XGF series has to be set 0.

7.9.2 Error History Reset (XPM_HRST)

Form of Function Block	Description
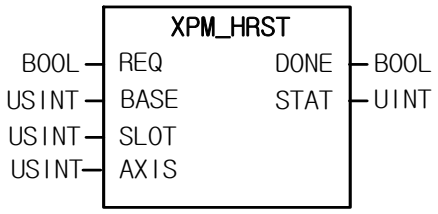	**Input** REQ : Request for execution of function block BASE : Set the base no. with module SLOT : Set the slot no. with module AXIS : Axis to command 1 ~ 4: aixs1 ~ axis4 **Output** DONE : Maintain 1 after first operating STAT : Output the error no. in operation

(1) Give “Error History Reset” command to the axis designated as the axis of positioning module with BASE (Base no. of Positioning module) and SLOT (Slot no. of Positioning module).

(2) Set an axis to command from 1 ~ 4. If you set wrongly, “Error6” arises.

1 ~ 4 : axis1 ~ axis4

(3) If errors arise, Max.10 errors are saved on module. This command is for resetting error history.

7.10 Other Function Blocks

7.10.1 Floating Origin Setting (XPM_FLT)

Form of Function Block	Description
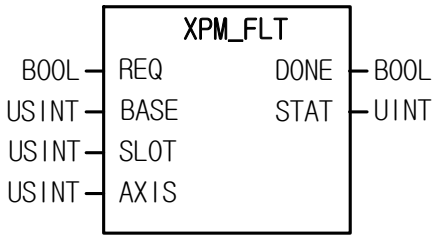	**Input** REQ : Request for execution of function block BASE : Set the base no. with module SLOT : Set the slot no. with module AXIS : Axis to command 1 ~ 4: aixs1 ~ axis4 **Output** DONE : Maintain 1 after first operating STAT : Output the error no. in operation

(1) Give “Floating Origin” command to the axis designated as the axis of positioning module with BASE (Base no. of Positioning module) and SLOT (Slot no. of Positioning module).

(2) This command is for setting the current position as the origin by compulsion. The address value saved on homing address will be the current position.

(3) Set an axis to command from 1 ~ 4. If you set wrongly, “Error6” arises.

1 ~ 4 : axis1 ~ axis4

7.10.2 M code Release (XPM_MOF)

Form of Function Block	Description
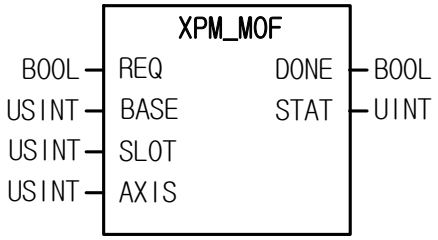	**Input** REQ : Request for execution of function block BASE : Set the base no. with module SLOT : Set the slot no. with module AXIS : Axis to command 1 ~ 4: aixs1 ~ axis4 **Output** DONE : Maintain 1 after first operating STAT : Output the error no. in operation

(1) Give “M code Release” command to the axis designated as the axis of positioning module with BASE (Base no. of Positioning module) and SLOT (Slot no. of Positioning module).

(2) In the case that M code of parameter of each axis is set as “With” of “After”, you may turn the M code off with this command. That is, M code signal will be OFF, M code no. will be 0.

(3) Set an axis to command from 1 ~ 4. If you set wrongly, “Error6” arises.

1 ~ 4 : axis1 ~ axis4

Chapter 8 Program

Here describes the basic program that operate positioning module case by using its commands.

8.1 Example of XGK Programming

8.1.1 General description

Here we supposed the positioning module installed at the slot no.3 of the 0 base. In the real usage, you need to change its value according to your actual set up.

8.1.2 Current State Read

(1) Using XSRD command

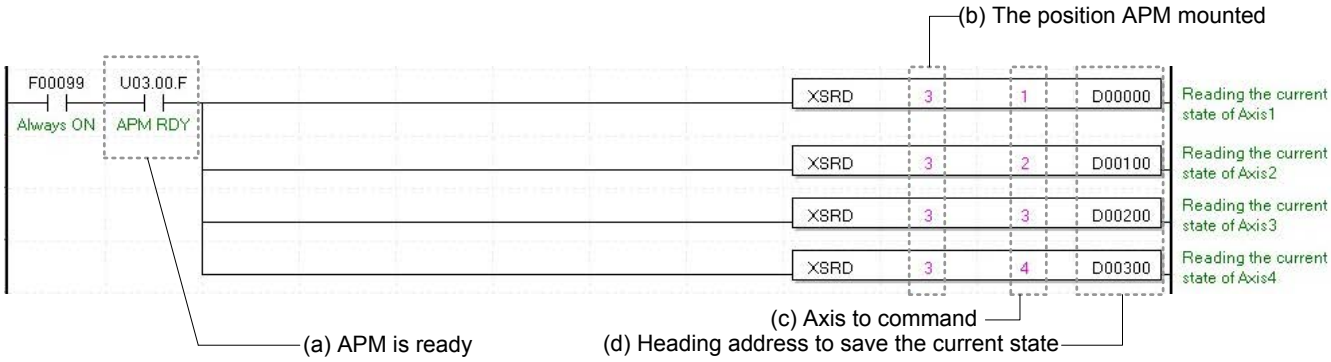

(a) Module's ready

After Turn On, if there is no error occurred in Positioning Module, it is "ON," meaning that modules are ready to operate.

(b) Address of Positioning Module

Before operation, you need to configure its position by numbers. In this example, Positioning Module installed at the slot no.3.

(c) Axis of operation

Positioning module operate as 4 axes. In this example, number 1 through 4 means axis 1 through axis 4.

(d) Address of first device where those conditions of current axis are saved

This D00000 tells the address of first device which already register from the configuration of sequence program. For example, in this program above, the condition of axis 1 will be saved from D00000 to D00030. How to setup a device function would be explained at the "Chapter 6.3.42 Reading Driving Condition."

(e) Also you can use the bit information from saved data in the device for as a condition of another operation. For example, in this program above, according to use axis 1 driving signal, you need to setup a data as D00000.0, and to check error condition of axis 2, you need to configure as D0000.1.

(2) Using command Get

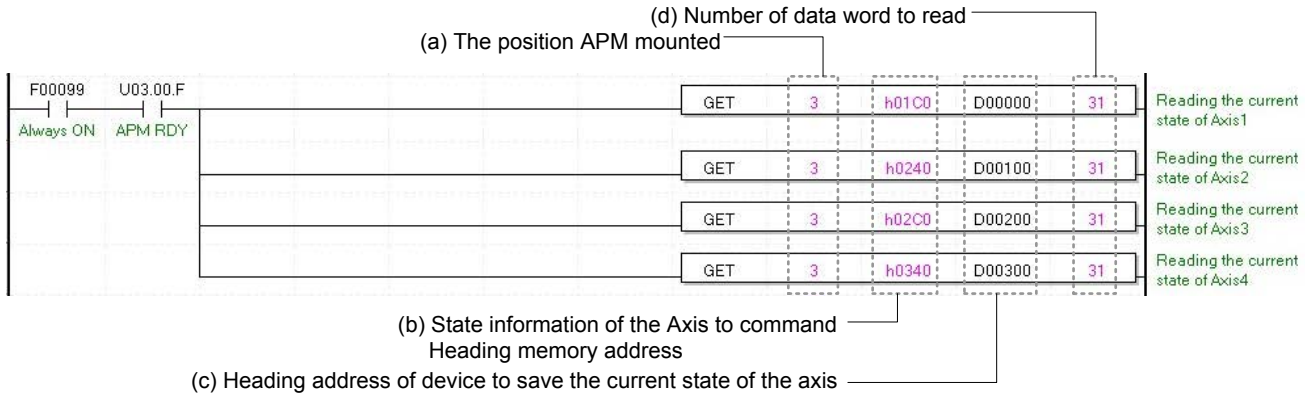

(a) The address of Positioning Module.

(b) The first memory address of operating Axis.

You can setup the memory address of condition information case by axis. For example, in this program above, "h0200" refers that condition information of 3axis. How to setup a memory address by axis would be explained at "Chapter 5.1.5 Condition Information."

(c) The first address of device which can save the condition of axis

(d) Number of reading data by WORD

Using command GET to read condition information, can save number of data by WORD, hence you only chosen data will be saved.

(e) Also you can use the bit information from saved data in the device for as a condition of another operation. For example, in this program above, according to use axis 1 driving signal, you need to setup a data as D00000.0, and to check error condition of axis 2, you need to configure as D0000.1.

8.1.3 Operation Test

(1) Floating Origin Setting

Decide origin of current motor's position without set a machinery origin.

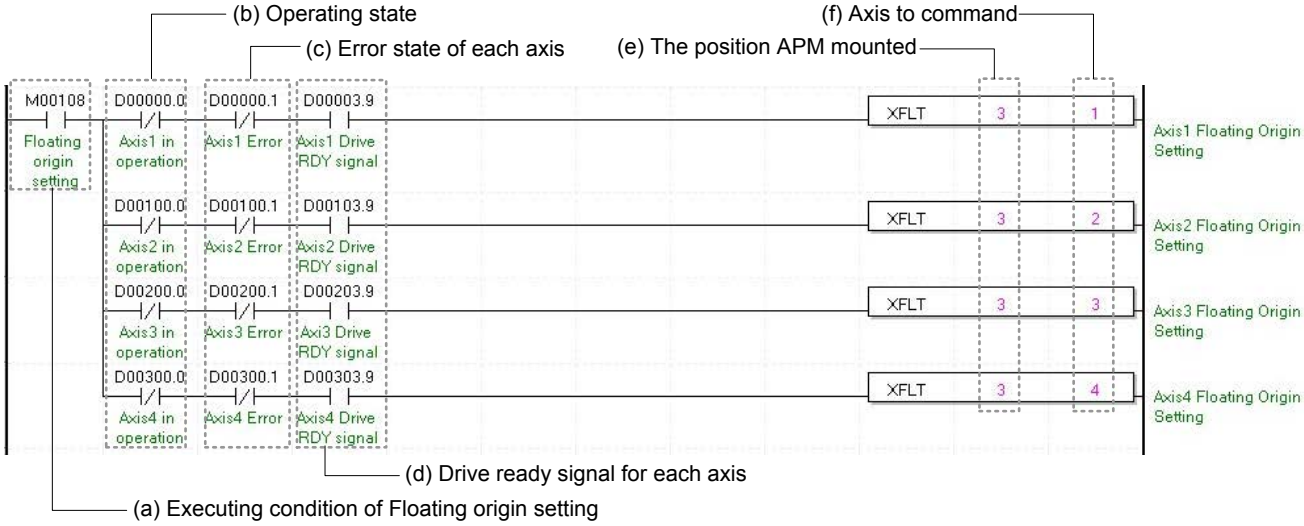

(a) Condition of running a Floating Origin Setting

It only works with XFLT command.

(b) Operating state by axis

According to exercise from "Chapter 8.1.2 Current State Reading," it is a signal of "Operating" for each axis.

(c) Error state for each axis

According to exercise from "Chapter 8.1.2 Current State Reading," it is a signal of "Error state" for each axis. It turns on when an error occurred. Operation will only work when there is no error. If you want to operate a system regardless of errors, you can just inactivate the function.

(d) Ready signal for each axis

According to exercise from "Chapter 8.1.2 Current State Reading," it is a signal of "Drive Ready" for each axis. This command only works when the condition of Floating Origin Setting is on. If it is not set as "ON," the "error 212" would be appeared.

(e) Address of Positioning Module

In this example, Positioning Module installed at the slot no.3 of 0 bases.

(f) Axis of command execution

You can set an axis for Floating Origin Setting. XGF series supports for 4 axes. In the "execution of axis" from the configuration of Floating Origin Setting, you can set a value for axis 1 through 4 axes

(2) Jog Operation

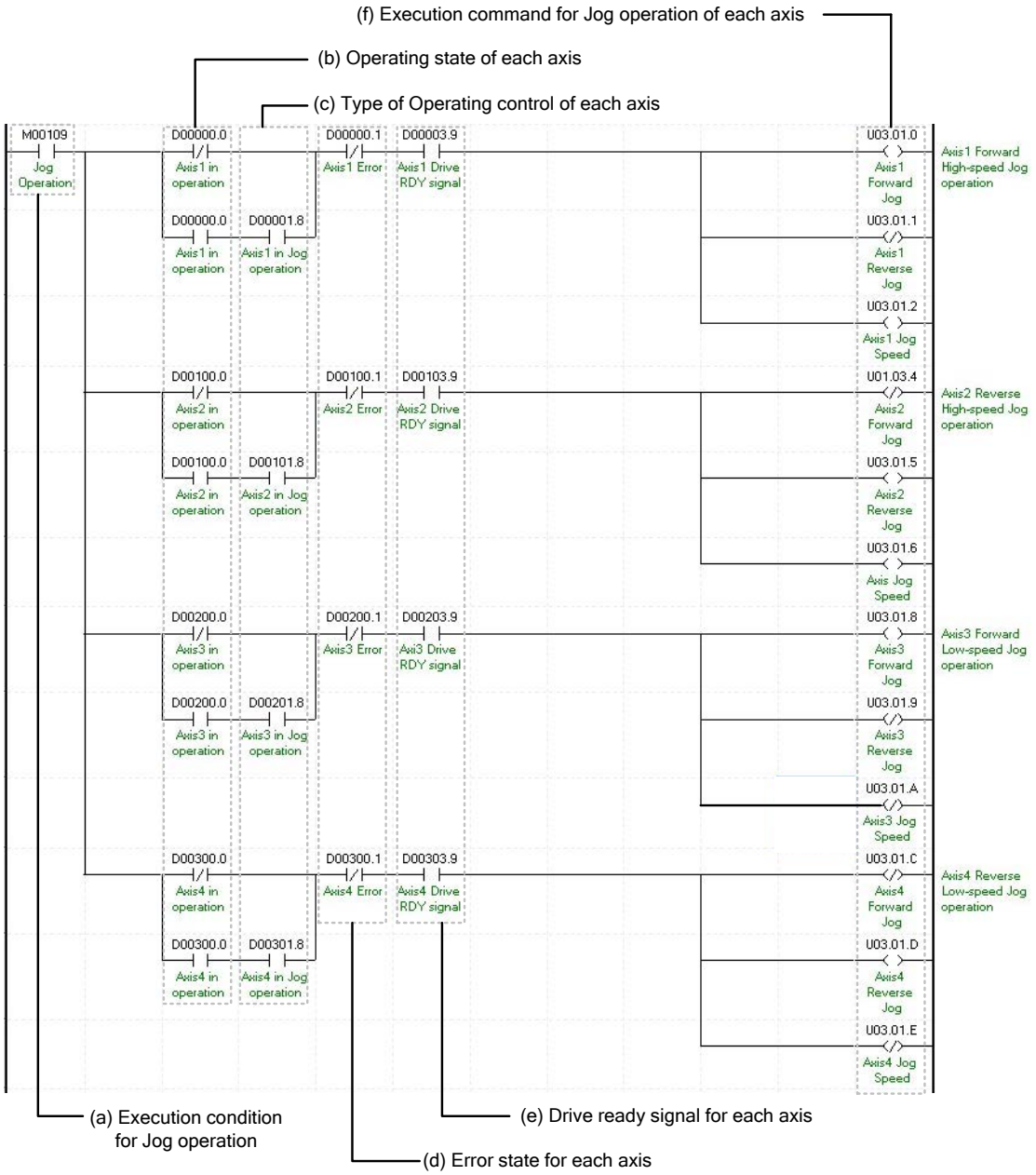

(a) Condition of Jog Operation

Condition of Jog Operation Command

(b) Operating state by axis

Jog Operation can only be working when the state of axis set as Jog Operation. In this example above, specific axis set as Jog Operation otherwise it is not operating.

(c) State of driving control by axis

According to exercise from “Chapter 8.1.2 Current State Reading,” it is a signal of “Jog Operating” for each axis. It turns on when it is operating. Jog Operation configuration can be changed while it is operating.

(d) Error state for each axis

According to exercise from “Chapter 8.1.2 Current State Reading,” it is a signal of “Error state” for each axis. It turns on when an error occurred. Operation will only work when there is no error. If you want to operate a system regardless of errors, you can just inactivate the function.

(e) Ready signal for each axis

According to exercise from “Chapter 8.1.2 Current State Reading,” it is a signal of “Drive Ready” for each axis. This command only works when the condition of Jog Operation is on. If it is not set as “ON,” the “error 413” would be appeared.

(f) Jog Operation Command for each axis

Jog Operation works by setting or clearing directly its considered bit from U device not by a command. In this example above, look at the axis 1, once Jog Operation conditions are satisfied, clockwise jog bit becomes ”On,’ count clockwise jog bit becomes “Off’,” and jog speed bit becomes “On.” Everything together Jog Operation works clock wisely with high speed. Reference for detail information about Bit of U device is from “Chapter 5.2.1.”

The value of U device renewed from Scan End of sequence program.

(3) Inching Operation

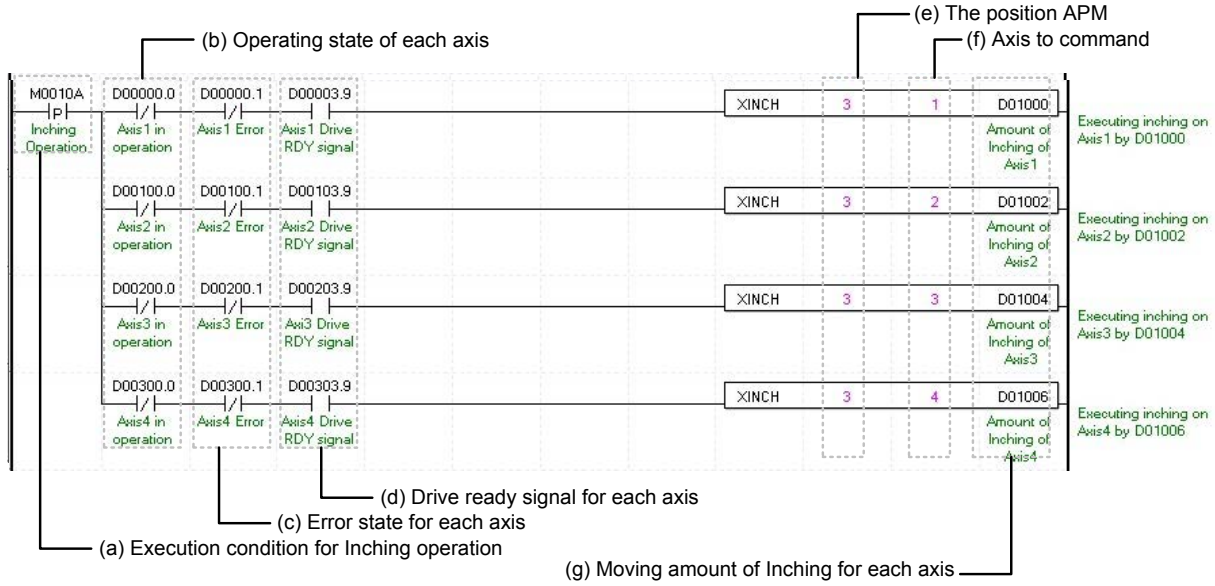

(a) Condition of Inching Operation

Condition of Inching Operation Command (XINCH)

(b) Operating state by axis

According to exercise from “Chapter 8.1.2 Current State Reading,” it is a signal of “Inching Operating” for each axis. It turns on when it is operating. Inching Operation can not be configured while it is running hence configuration will only be configured when it is not running. If you execute Inching Operation while it is running, the “error 401” would be appeared.

(c) Error state for each axis

According to exercise from “Chapter 8.1.2 Current State Reading,” it is a signal of “Error state” for each axis. It turns on when an error occurred. Operation will only work when there is no error. If you want to operate a system regardless of errors, you can just inactivate the function.

(d) Ready signal for each axis

According to exercise from “Chapter 8.1.2 Current State Reading,” it is a signal of “Drive Ready” for each axis. This command only works when the condition of Inching Operation is on. If it is not set as “ON,” the “error 403” would be appeared.

(e) Address of Positioning Module

In this example, Positioning Module installed at the slot no.3 of 0 bases.

(f) Axis of command execution

You can set an axis for Inching Operation. XGF series supports for 4 axes. In the “execution of axis” from the configuration of Inching Operation, you can set a value for axis 1 through 4 axes.

(g) Amount of Inching Operation Movement

Measure the amount of moving range by Inching Operation.

(h) Reference for Inching Operation is from “Chapter 9.3.2.”

(4) Return to the position before Manual Operation

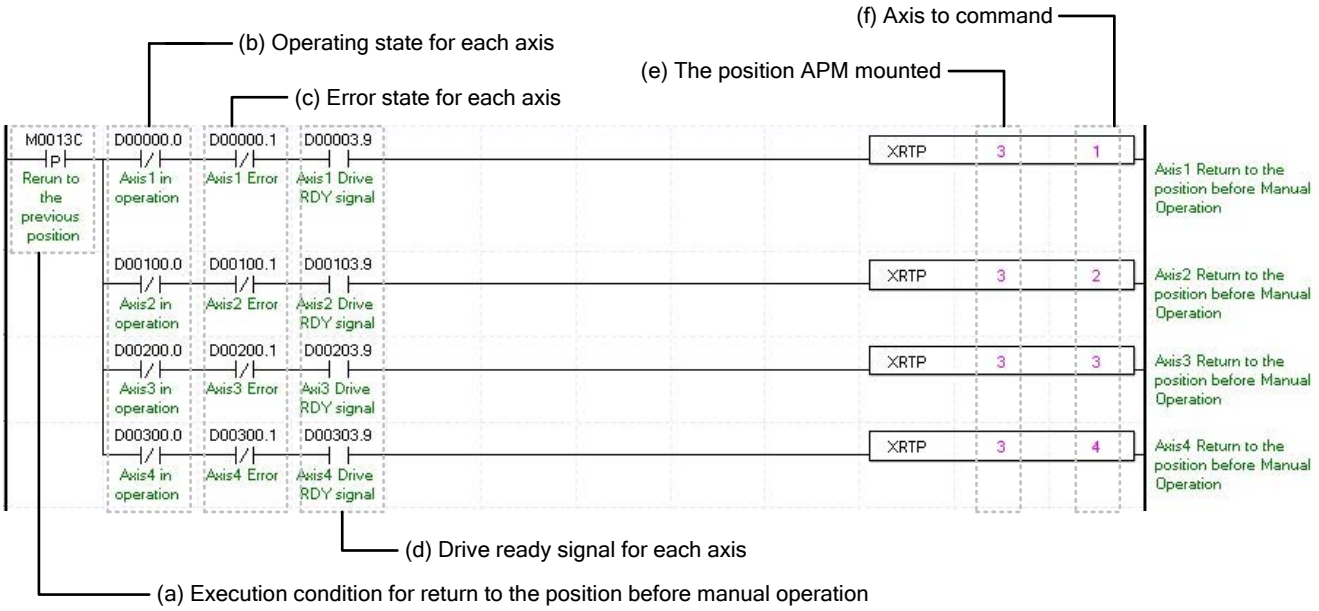

(a) Condition of Return to the position before Manual Operation

Condition of Return to the position before Manual Operation Command (XRTP)

(b) Operating state by axis

According to exercise from “Chapter 8.1.2 Current State Reading,” it is a signal of “Manual Operating” for each axis. It turns on when it is operating. Inching Operation can not be configured while it is running hence configuration will only be configured when it is not running. If you execute Manual Operation while it is running, the “error 431” would be appeared.

(c) Error state for each axis

According to exercise from “Chapter 8.1.2 Current State Reading,” it is a signal of “Error state” for each axis. It turns on when an error occurred. Operation will only work when there is no error. If you want to operate a system regardless of errors, you can just inactivate the function.

(d) Ready signal for each axes

According to exercise from “Chapter 8.1.2 Current State Reading,” it is a signal of “Drive Ready” for each axis. This command only works when the condition of Manual Operation is on. If it is not set as “ON,” the “error 434” would be appeared.

(e) Address of Positioning Module

In this example, Positioning Module installed at the slot no.3 of 0 bases.

(f) Axis of command execution

You can set an axis for Inching Operation. XGF series supports for 4 axes. In the “execution of axis” from the configuration of Manual Operation, you can set a value for axis 1 through 4 axes.

(g) When manual operation is running, the other operations are going back to its original position such as Jog Operation and Inching Operation. Reference for Manual Operation is from “Chapter 9.3.2.”

8.1.4 Parameter and Operation Data Setting

(1) Parameter Setting

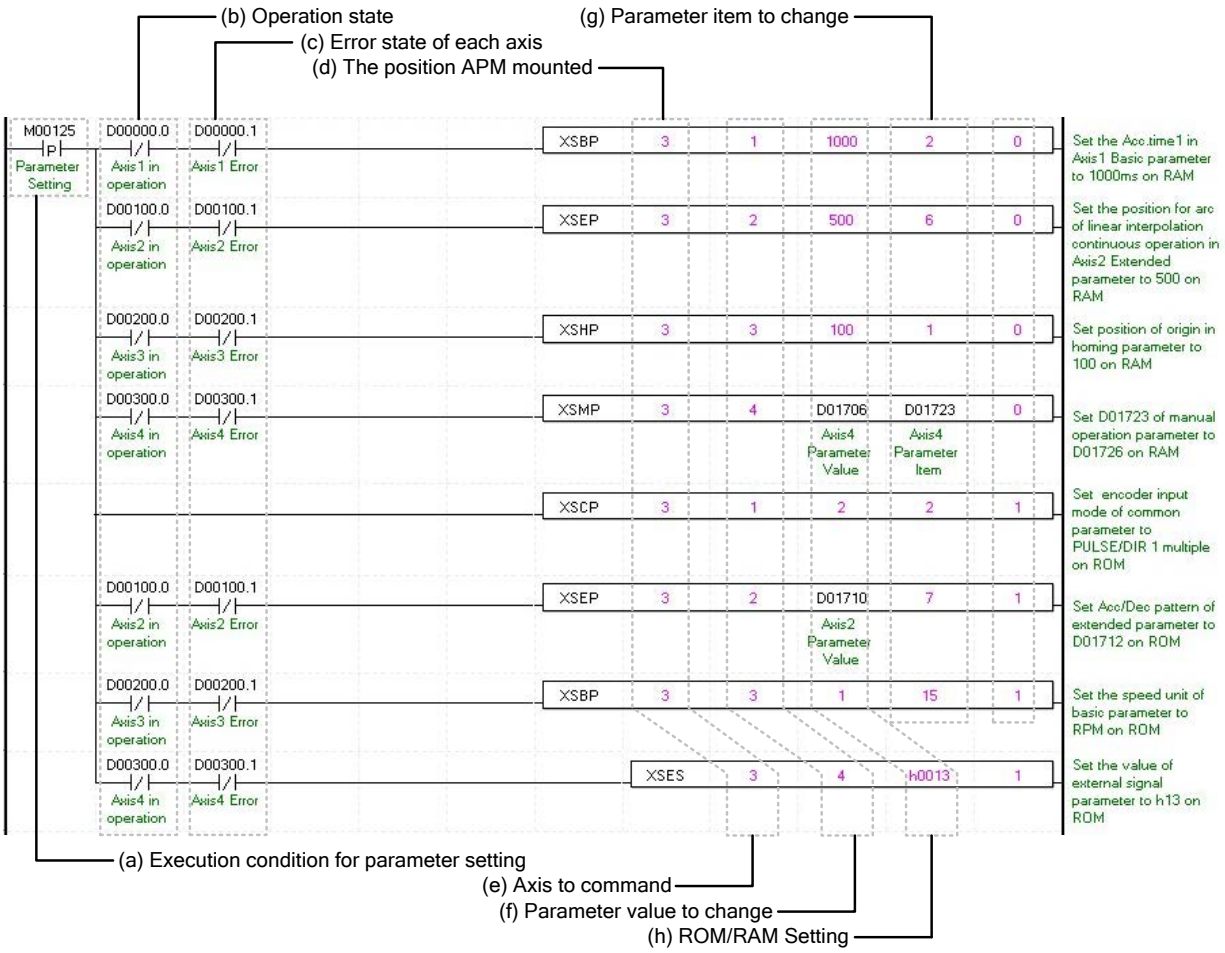

(a) Condition of Parameter Setting Command

Condition of Parameter Setting Command (XSEP, XSHP, XSMP, XSES, XSCP)

(b) Operating state by axis

According to exercise from “Chapter 8.1.2 Current State Reading,” it is a signal of “Operating” for each axis. It turns on when it is operating. Except common parameter setting, parameter setting can not be configured while it is running hence configuration will only be configured when it is not running. If you execute Parameter Setting while it is running, the “error 471” would be appeared.

(c) Error state for each axis

According to exercise from “Chapter 8.1.2 Current State Reading,” it is a signal of “Error state” for each axis. It turns on when an error occurred. Operation will only work when there is no error. If you want to operate a system regardless of errors, you can just inactivate the function.

(d) Address of Positioning Module

In this example, Positioning Module installed at the slot no.3 of 0 bases.

(e) Axis of command execution

You can set an axis for Parameter Setting. XGF series supports for 4 axes. In the “execution of axis” from the configuration of Parameter Setting, you can set a value for axis 1 through 4 axes.

(f) Value of Changing Parameter

You can set a value of changing parameter. For more information about Parameter Value Changing look for “Chapter 6. Command.” In case of setting I/O parameter, the value would be parameter value itself.

(g) List of Changing Parameter

You need to set a list for parameter (f) changing from set command. Once operating is working, this value will change to parameter (f). For more information of list of changing parameter look for “Chapter 6. Command.” In case of setting I/O parameter, the value would be parameter value itself. Therefore changing of list would not be necessary.

(h) ROM/RAM Setting

This function sets whether you save value of changing parameter to Rom or Ram. If you choose Rom the data will be saved regardless of power and if you save in the ram the data will be vanished when powers off. This parameter sets as 1 means Rom saved, and sets as 0 means Ram saved. There is no limitation of saving parameters in the Rom since parameter of Positioning Module saved in the FRAM.

(2) Operating Data Setting

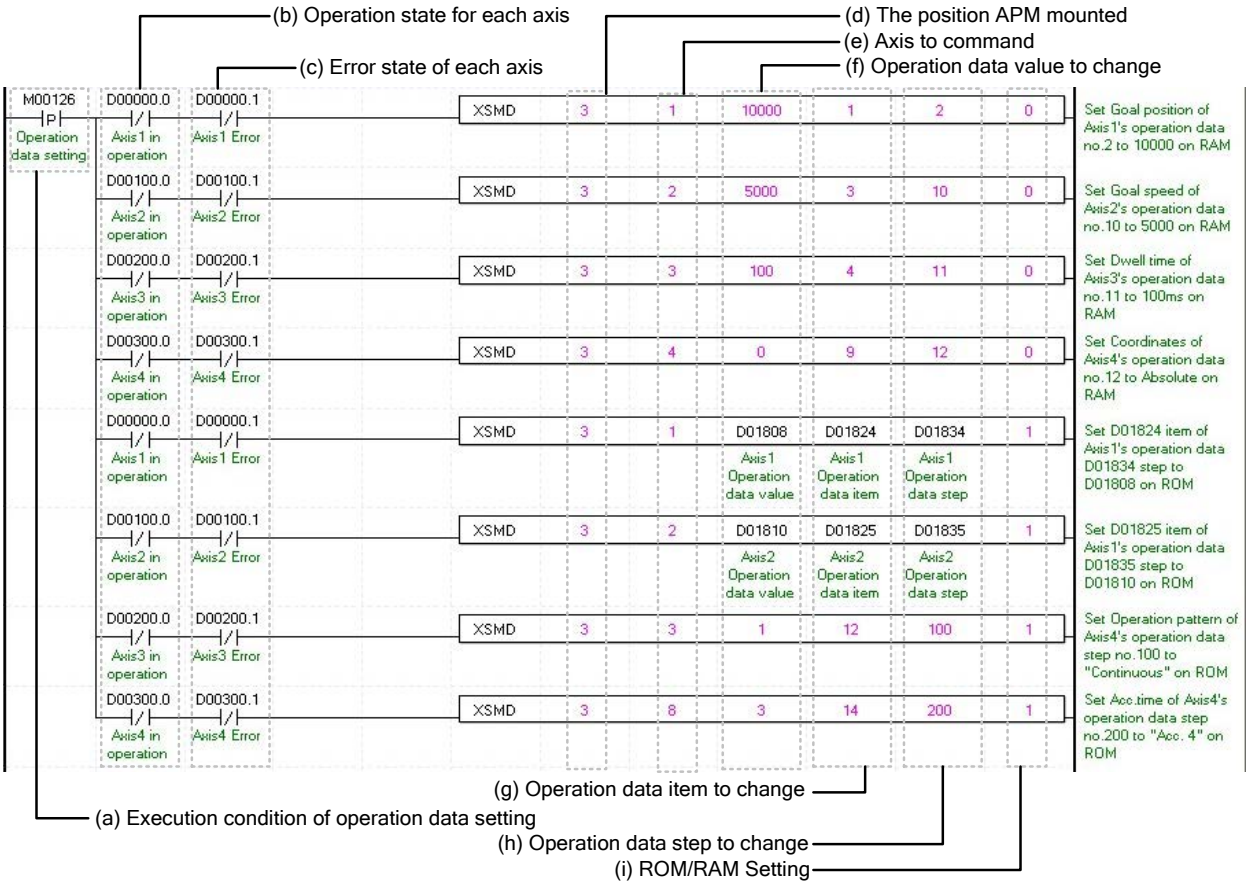

(a) Condition of Operating Data Command

Condition of Operating Data Command (XSMD)

(b) Operating state by axis

According to exercise from “Chapter 8.1.2 Current State Reading,” it is a signal of “Operating” for each axis. It turns on when it is operating. Operating Data Setting can be configured while it is running. If you execute Operating Data Setting while it is running, it is reflected after current step operating ended.

(c) Error state for each axis

According to exercise from “Chapter 8.1.2 Current State Reading,” it is a signal of “Error state” for each axis. It turns on when an error occurred. Operation will only work when there is no error. If you want to operate a system regardless of errors, you can just inactivate the function.

(d) Address of Positioning Module

In this example, Positioning Module installed at the slot no.3 of 0 bases.

(e) Axis of command execution

You can set an axis for Parameter Setting. XGF series supports for 4 axes. In the “execution of axis” from the configuration of Parameter Setting, you can set a value for axis 1 through 4 axes.

(f) Value of Changing Parameter

You can set a value of changing parameter.

(g) List of Changing Parameter

You need to set a list for parameter (f) changing from set command. Once operating is working, this value will change to parameter (f). Each value of Operating Data is listed below. For example if you put 1000 for value of Changing Operating Data and 4 for Operating data then the value of Dwell is going to be set as 1000ms.

Setting Value	Items
1	Goal Position
2	Circular interpolation auxiliary position
3	Operating speed
4	Dwell Time
5	M code No.
6	Auxiliary axis setting
7	Helical interpolation axis
8	The number of circular interpolation turn
9	Coordinates
10	Control method
11	Operating method
12	Operting pattern
13	Size of Circular arc
14	Acc. No.
15	Dec. No.
16	Circular interpolation method
17	Circular interpolation direction

(h) Changing Operating Data Step

You can configure the changing operating data step number by using the operating data step command. XGT supports 400 steps for each axis. This value supports from number 0 to 400. The numbers are considered as a step meaning number 1~400 are same as 1~400 steps. When you set this value as 0 means that you will stay put with current value.

(i) ROM/RAM Setting

This function sets whether you save value of changing parameter to Rom or Ram. If you choose Rom the data will be saved regardless of power and if you save in the ram the data will be vanished when powers off. This parameter sets as 1 means Rom saved, and sets as 0 means Ram saved. There is no limitation of saving parameters in the Rom since parameter of Positioning Module saved in the FRAM.

(3) Operation Data Teaching Array

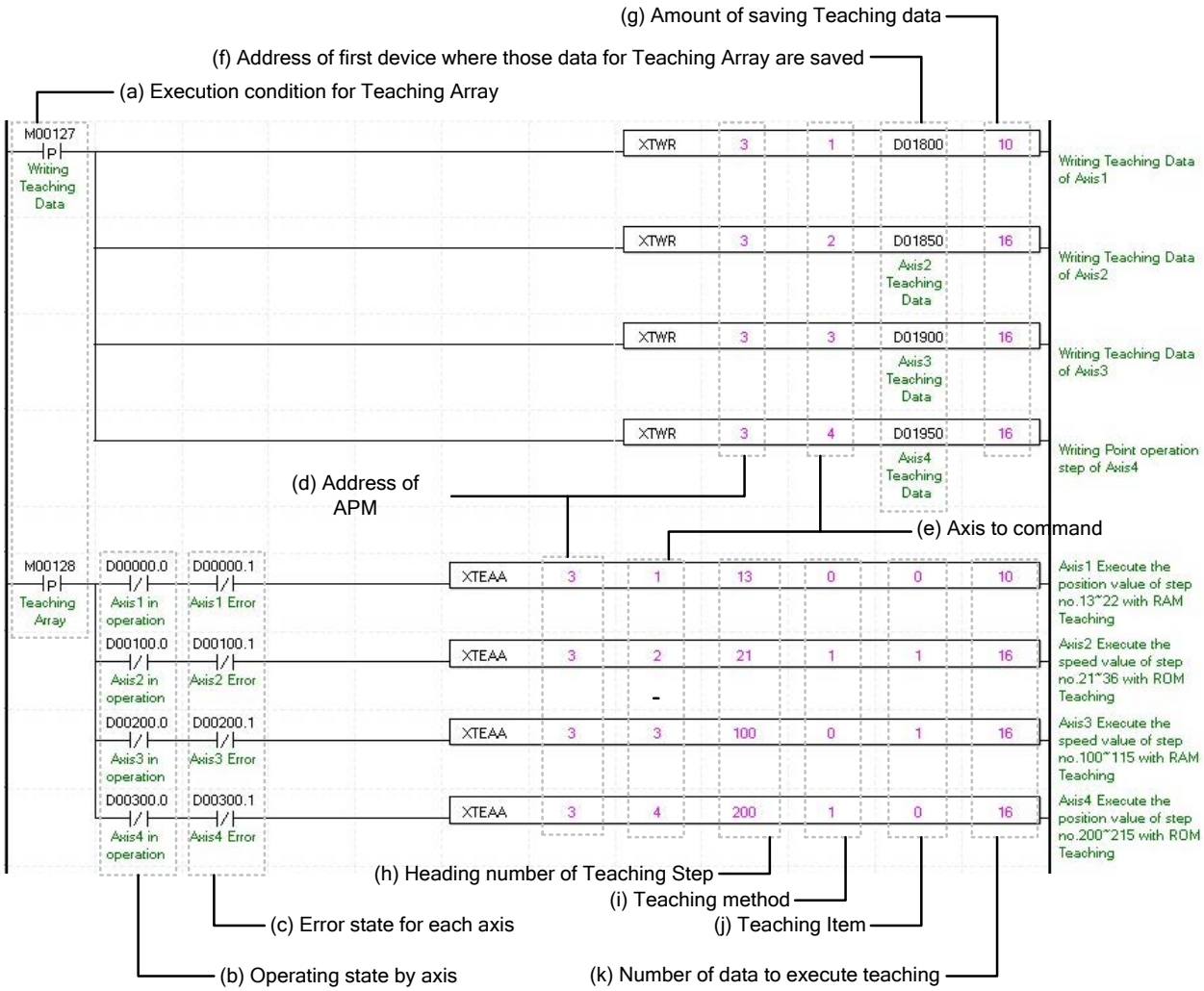

(a) Condition of Teaching Array

Condition Teaching Array Command (XTWR, XTEAA)

(b) Operating state by axis

According to exercise from “Chapter 8.1.2 Current State Reading,” it is a signal of “Operating” for each axis. It turns on when it is operating. Teaching Array can be configured while it is running. If you execute Teaching Array while it is running, the step data will be change instantly. But the step data in operation will be change after the end of current step operation.

(c) Error state for each axis

According to exercise from “Chapter 8.1.2 Current State Reading,” it is a signal of “Error state” for each axis. It turns on when an error occurred. Operation will only work when there is no error. If you want to operate a system regardless of errors, you can just inactivate the function.

(d) Address of Positioning Module

In this example, Positioning Module installed at the slot no.3 of 0 bases.

(e) Axis of command execution

You can set an axis for Parameter Setting. XGF series supports for 4 axes. In the “execution of axis” from the configuration of Parameter Setting, you can set a value for axis 1 through 4 axes.

(f) Address of first device where those data for Teaching Array are saved

To execute a Teaching Array, you need to set a specific value first. TWR commands are using for set up those Teaching Array data. It has to be done before actual Teaching Array operation. Teaching Data will be set up depends on number of first device as below table.

No.	Device No.	Teaching array data
1	Device + 0	Teaching array data1
2	Device + 2	Teaching array data2
3	Device + 4	Teaching array data3
4	Device + 6	Teaching array data4
5	Device + 8	Teaching array data5
6	Device + 10	Teaching array data6
7	Device + 12	Teaching array data7
8	Device + 14	Teaching array data8
9	Device + 16	Teaching array data9
10	Device + 18	Teaching array data10
11	Device + 20	Teaching array data11
12	Device + 22	Teaching array data12
13	Device + 24	Teaching array data13
14	Device + 26	Teaching array data14
15	Device + 28	Teaching array data15
16	Device + 30	Teaching array data16

(g) Amount of Saving Teaching data

Decide how many data will be saved by using XTWR command. Maximum 16 data can be saved. In this example above, 10 Teaching data saved in the axis 1. Therefore those Teaching data from D01800~D01818 saved in the module.

(h) First number of Teaching Step

You can setup the first number of Teaching Step among the Operating Data step. In this example above, Teaching Array of axis 1 will be operate from 22th step, which is 10th step away from 13th step, hence it will be operate between 13th step and 22th step.

(i) Teaching Method

This function sets whether you save value of changed Teaching data to Rom or Ram. If you choose Rom the data will be saved regardless of power and if you save in the ram the data will be vanished when powers off. This parameter sets as 1 means Rom saved, and sets as 0 means Ram saved. There is no limitation of saving parameters in the Rom since parameter of Positioning Module saved in the FRAM.

(j) List of Teaching

You can set a data with Teaching Method among the Operating Data. Both “Goal Position” and “Operating Speed” can be changed by Teaching Array. When its value set “0” means set a Goal Position and “1” means set an Operating Speed.

(k) Amount of Teaching Method

Decide how many steps will be operated using by Teaching Method. Maximum 16 Teaching Array data can be used. For more information about Teaching Array Operation, look for reference from “Chapter 9.7.1”

(l) This example above can also be operated, using command PUT from XTWR as below.

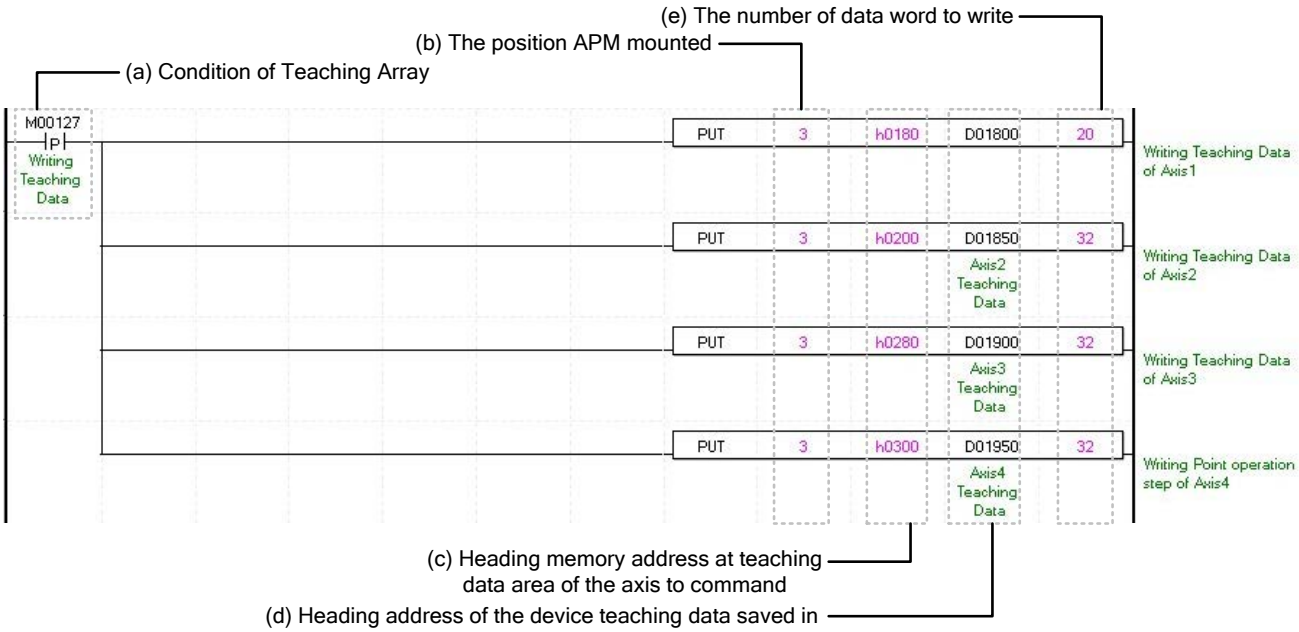

For more information about each saving Teaching Data, look for reference from “Chapter 5.1.2.” When you are using a command “PUT,” you need to setup a type of data as a “WORD” not a “DINT” considered its size.

(4) Saving Current Data

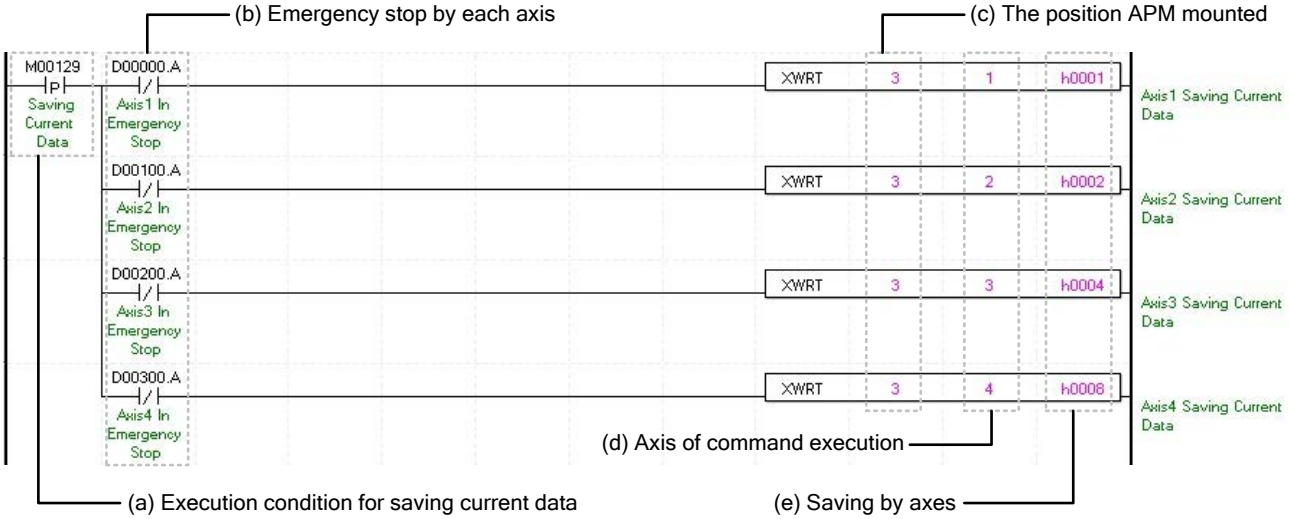

(a) Condition of Saving Current Data

Condition of Saving Current Data Command (XWRT). When current saving data operated, those values of module parameter and operating data would be saved in FRAM. Therefore configuration of Ram or Ram Teaching would be constantly saved whether power is on or not.

(b) Emergency Stop by each axis

According to exercise from “Chapter 8.1.2 Current State Reading,” it is a signal of “State of Emergency Stop” for each axis. It turns on when it is Emergency Stop. Emergency Stop can not be configured while it is running hence configuration will only be configured when it is not running.

(c) Address of Positioning Module

In this example, Positioning Module installed at the slot no.3 of 0 bases.

(d) Axis of command execution

You can set an axis for Parameter Setting. XGF series supports for 4 axes. In the “execution of axis” from the configuration of Parameter Setting, you can set a value for axis 1 through 4 axes.

(e) Saving by axes

Configure current data operation setting. Choosing axes are configured follow by below table. Therefore even if those axis are not operated as it programmed, saving axis can be saved in Array. The data of operated axis saved in FRAM, which make constantly stable whether its power is on or not.

15 ~ 4 Bit	3Bit	2Bit	1Bit	0Bit
N/A	axis 4	axis 3	axis 2	axis 1

8.1.5 Positioning Operation

(1) Homing

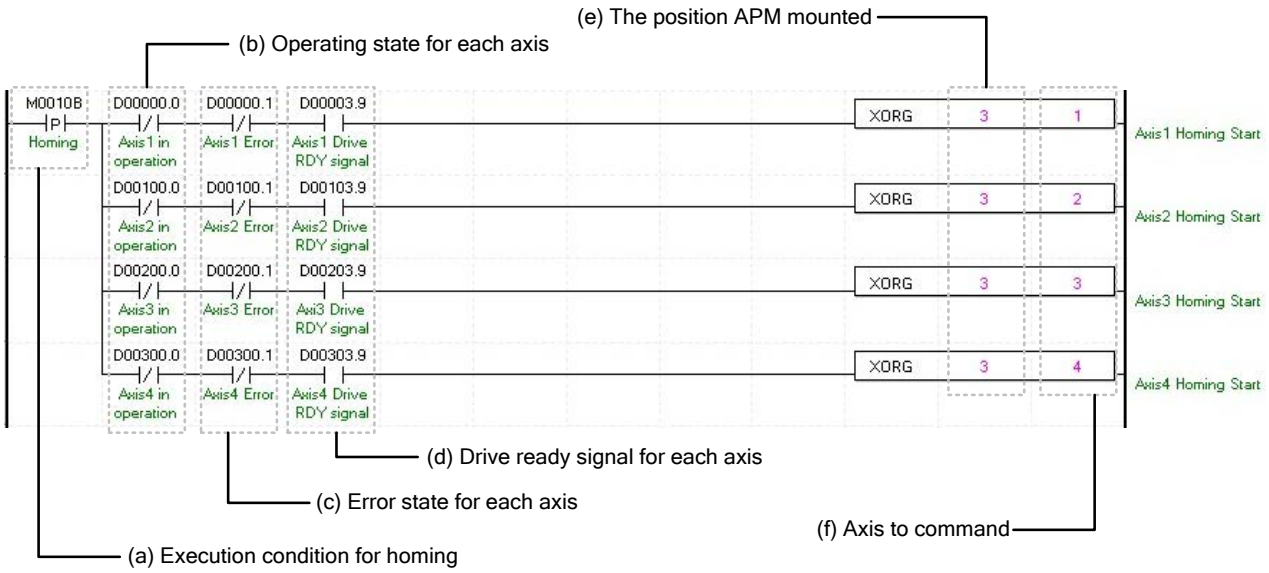

(a) Condition of Homing

Condition of Homing Command (XORG)

(b) Operating state by axis

According to exercise from “Chapter 8.1.2 Current State Reading,” it is a signal of “Operating” for each axis. It turns on when it is operating. Homing command can not be configured while it is running hence configuration will only be configured when it is not running. If you execute Homing while it is running, the “error 201” would be appeared.

(c) Error state for each axis

According to exercise from “Chapter 8.1.2 Current State Reading,” it is a signal of “Error state” for each axis. It turns on when an error occurred. Operation will only work when there is no error. If you want to operate a system regardless of errors, you can just inactivate the function.

(d) Ready signal for each axes

According to exercise from “Chapter 8.1.2 Current State Reading,” it is a signal of “Drive Ready” for each axis. This command only works when the condition of Drive Ready is on. If it is not set as “ON,” the “error 203” would be appeared.

(e) Address of Positioning Module

In this example, Positioning Module installed at the slot no.3 of 0 bases.

(f) Axis of command execution

You can set an axis for Inching Operation. XGF series supports for 4 axes. In the “execution of axis” from the configuration of Manual Operation, you can set a value for axis 1 through 4 axes.

(g) For more information, reference for Homing is in the “Chapter 9.1.”

(2) Direct Start

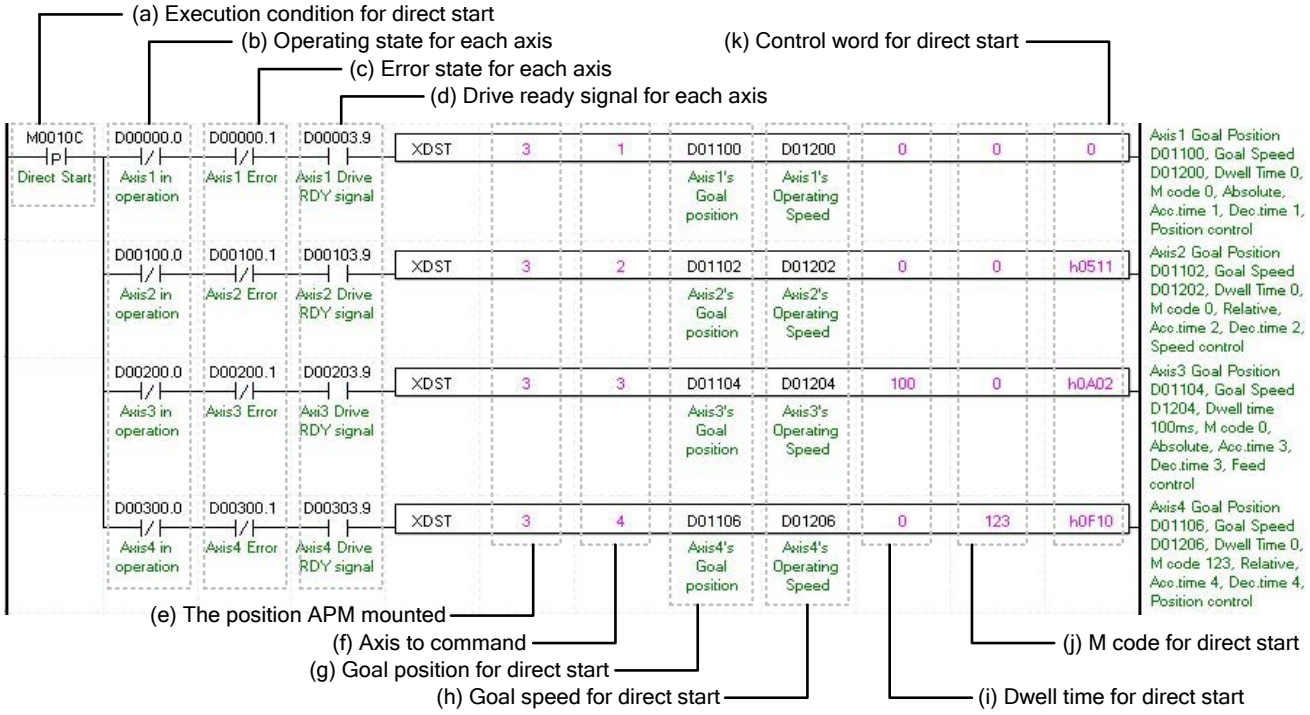

(a) Condition of Direct Start

Condition of Direct Start Command (XDST)

(b) Operating state by axis

According to exercise from “Chapter 8.1.2 Current State Reading,” it is a signal of “Operating” for each axis. It turns on when it is operating. Direct Start command can not be configured while it is running hence configuration will only be configured when it is not running. If you execute Direct Start while it is running, the “error 221” would be appeared.

(c) Error state for each axis

According to exercise from “Chapter 8.1.2 Current State Reading,” it is a signal of “Error state” for each axis. It turns on when an error occurred. Operation will only work when there is no error. If you want to operate a system regardless of errors, you can just inactivate the function.

(d) Ready signal for each axes

According to exercise from “Chapter 8.1.2 Current State Reading,” it is a signal of “Drive Ready” for each axis. This command only works when the condition of Drive Ready is on. If it is not set as “ON,” the “error 225” would be appeared.

(e) Address of Positioning Module

In this example, Positioning Module installed at the slot no.3 of 0 bases.

(f) Axis of command execution

You can set an axis for Inching Operation. XGF series supports for 4 axes. In the “execution of axis” from the configuration of Manual Operation, you can set a value for axis 1 through 4 axes.

(g) Goal of Direct Start

Decide changing position of Direct Start command. In this example above, the initialized value is “device,” but you can also change it with “real numbers,” which data type is “DINT.”

(h) Speed of Direct Start

Decide goal speed of Direct Start. In this example above, the initialized value is “device,” but you can also change it with “real numbers,” which data type is “UDINT.”

(i) Dwell Time of Direct Start

Dwell Time consider as a total amount of time from beginning of Direct Start operation that reach to the goal position and make output of Positioning Done Signal. That means after done its operation, direct Start will make a Positioning done signal. Its unit is “ms,” and type is “UINT”

(j) Direct Start M code

You can set a value of M code which are displaying of Operating Parameter by Direct Start. The way of M code outputs are “Parameter Expansion, M code Mode,” within the “None, With, After.” It will make an M code besides you choose “None” for its parameter. For more information, reference for M code is in the “Chapter 4.2.2”

(k) Direct Start Control Word

These are list of setting values in a form of Word by Bit for Direct Start. The details of Bits are in the table below.

15 ~ 12	11 ~ 10	9 ~ 8	7 ~ 5	4	3 ~ 2	1 ~ 0
-	Dec. Time	Acc. Time	-	0:Absolute 1:Ralative	-	0:Position control 1:Speed control 2:Feed control

(3) Indirect Start

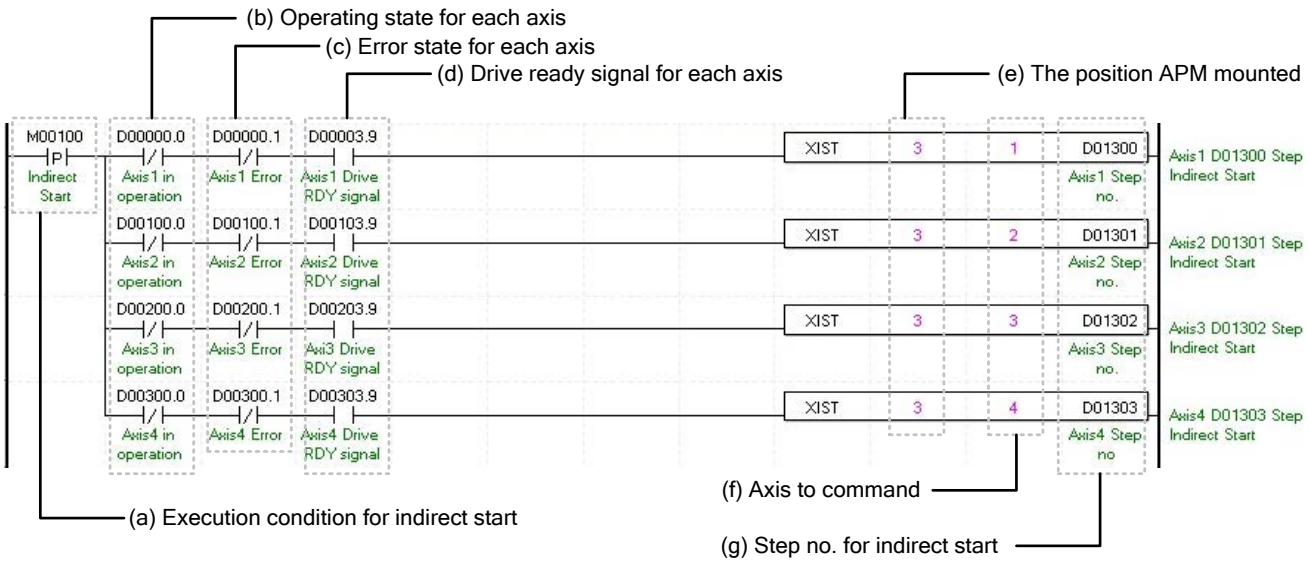

(a) Condition of Indirect Start

Condition of Indirect Start Command (XDST)

(b) Operating state by axis

According to exercise from “Chapter 8.1.2 Current State Reading,” it is a signal of “Operating” for each axis. It turns on when it is operating. Operating Data Setting can not be configured while it is running hence configuration will only be configured when it is not running. If you execute Indirect Start while it is running, the “error 231” would be appeared.

(c) Error state for each axis

According to exercise from “Chapter 8.1.2 Current State Reading,” it is a signal of “Error state” for each axis. It turns on when an error occurred. Operation will only work when there is no error. If you want to operate a system regardless of errors, you can just inactivate the function.

(d) Ready signal for each axes

According to exercise from “Chapter 8.1.2 Current State Reading,” it is a signal of “Drive Ready” for each axis. This command only works when the condition of Drive Ready is on. If it is not set as “ON,” the “error 235” would be appeared.

(e) Address of Positioning Module

In this example, Positioning Module installed at the slot no.3 of 0 bases.

(f) Axis of command execution

You can set an axis for Parameter Setting. XGF series supports for 4 axes. In the “execution of axis” from the configuration of Parameter Setting, you can set a value for axis 1 through 4 axes.

(g) Operating step number by Indirect Start

Set the operating step number by indirect start for main command axis.

(h) Indirect start operates by appointing step of position data for each axis. Therefore it could run those commands of Positioning control, Speed control, Feed control, Linear circular interpolation depends on setting of positioning data. For more information, reference for Setting of Operating Data is in the “Chapter4.7.”

(4) Ellipse Interpolation

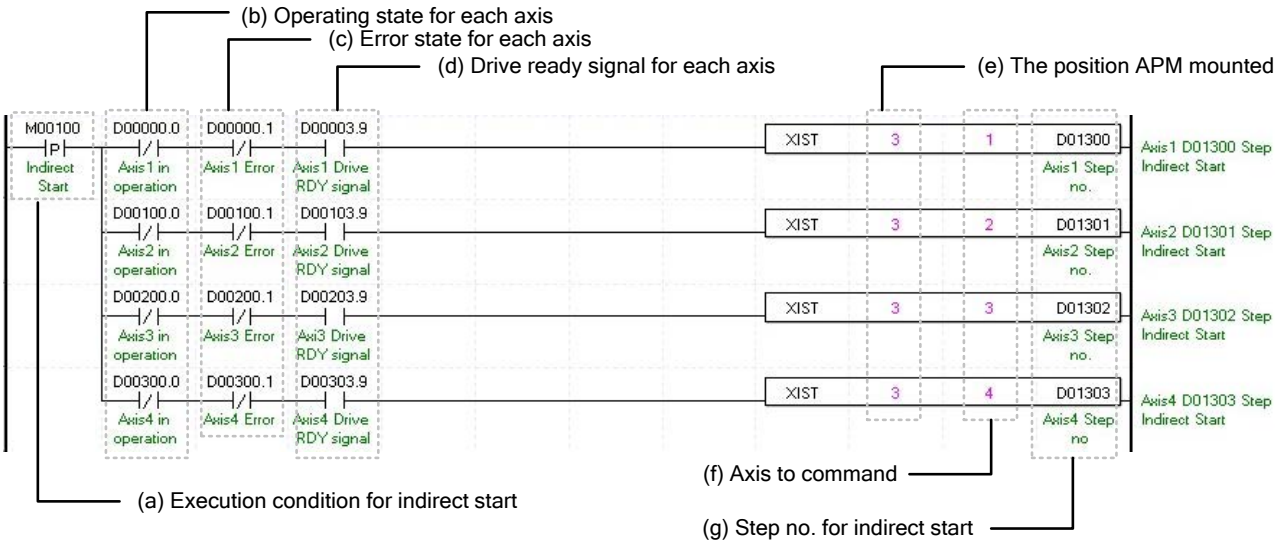

(a) Condition of Ellipse Interpolation

Condition of Ellipse Interpolation Command (XELIN)

(b) Operating state by axis

According to exercise from “Chapter 8.1.2 Current State Reading,” it is a signal of “Operating” for each axis. It turns on when it is operating. Operating Data Setting can not be configured while it is running hence configuration will only be configured when it is not running. If you execute Ellipse Interpolation while it is running, the “error 541” would be appeared.

(c) Error state for each axis

According to exercise from “Chapter 8.1.2 Current State Reading,” it is a signal of “Error state” for each axis. It turns on when an error occurred. Operation will only work when there is no error. If you want to operate a system regardless of errors, you can just inactivate the function.

(d) Ready signal for each axes

According to exercise from “Chapter 8.1.2 Current State Reading,” it is a signal of “Drive Ready” for each axis. This command only works when the condition of Drive Ready is on. If a Drive Ready of main axis is not set as “ON,” the “error 549” would be appeared and If a Drive Ready of subordinate axis is not set as “ON,” the “error 550” would be appeared and

(e) Address of Positioning Module

In this example, Positioning Module installed at the slot no.3 of 0 bases.

(f) Axis of command execution

You can set an axis for Parameter Setting. XGF series supports for 4 axes. In the “execution of axis” from the configuration of Parameter Setting, you can set a value for axis 1 through 4 axes.

(g) Operating step number by Ellipse Interpolation

Set the operating step number by Ellipse Interpolation. The setting of main operating step and subordinate step is the same.

(h) Ratio of Ellipse Interpolation Axis

Set both ratio values for main and subordinate axis of set operates data from circular interpolation locus. It is to change circular locus into ellipse locus by using ratio of main and subordinate axis.

(i) Degree of Ellipse Interpolating Operation

Set the degree for Ellipse Interpolating Operation. Unit is [X10^{-1} degree]. For more information, reference for Ellipse Interpolation is in the "Chapter9.213."

(5) Synchronous Start

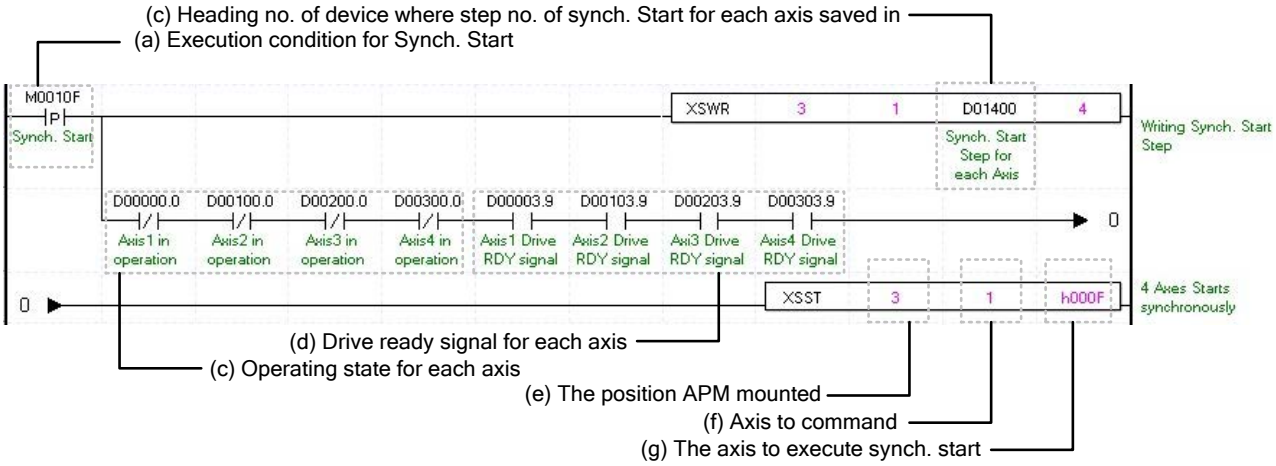

(a) Condition of Synchronous Start

Condition of Synchronous Start Command

(b) Address of first device where those step numbers for Synchronous Start of each axis are saved

To execute a Synchronous Start, set data steps for each axis. XSWR commands are using for set up those step data for Synchronous Start. It has to be done before actual Synchronous Start operation. Synchronous Start will be set up depends on number of first device as below table.

Value	Device No.	Teaching Array Data
1	Device + 0	Axis1 Synchronous Start Step
2	Device + 1	Axis2 Synchronous Start Step
3	Device + 2	Axis3 Synchronous Start Step
4	Device + 3	Axis4 Synchronous Start Step

(c) Operating state by axis

According to exercise from "Chapter 8.1.2 Current State Reading," it is a signal of "Operating" for each axis. It turns on when it is operating. Operating Data Setting can not be configured while it is running hence configuration will only be configured when it is not running. If you execute Axis1 Synchronous Start while it is running, the "error 291" would be appeared.

(d) Ready signal for each axes

According to exercise from “Chapter 8.1.2 Current State Reading,” it is a signal of “Drive Ready” for each axis. This command only works when the condition of Drive Ready is on. If it is not set as “ON,” the “error 295” would be appeared.

(e) Address of Positioning Module

In this example, Positioning Module installed at the slot no.3 of 0 bases.

(f) Axis of command execution

You can set an axis for Parameter Setting. XGF series supports for 4 axes. In the “execution of axis” from the configuration of Parameter Setting, you can set a value for axis 1 through 4 axes.

(g) Axis for Synchronous Start

Set axis for Synchronous Start. The axis for Synchronous Start uses a “bit” from WORD Data setting as a “1” for each axis. Axis for each bits are as below.

15 ~ 4 Bit	3Bit	2Bit	1Bit	0Bit
Not use	Axis4	Axis3	Axis2	Axis1

(h) In this program above, you can use command “PUT” instead of XSWR.

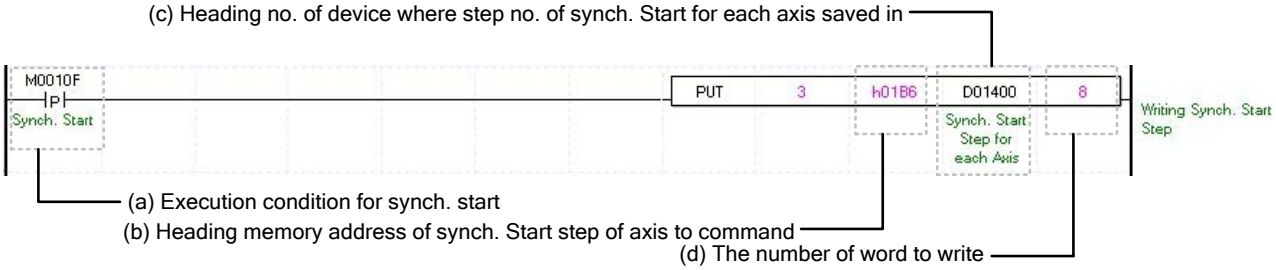

Setting a memory address for each axis of Synchronous Start step number, look up reference for Synchronous Start is in the “Chapter5.1.3.”

(6) Point Operation

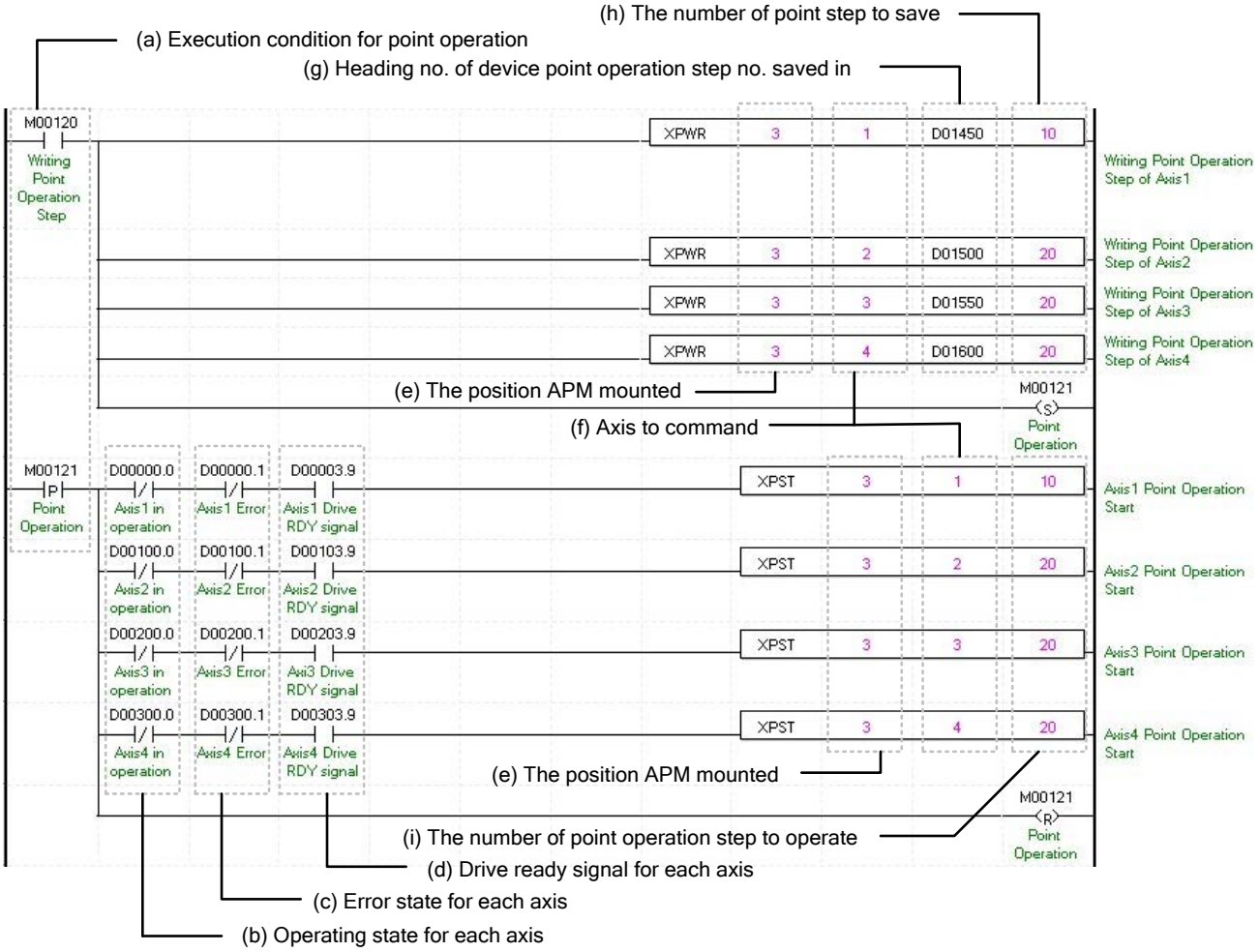

(a) Condition of Point Operation

Condition of Point Operation Command (XPST) Point Operation Step Writing has to be done before execute the Point Operation.

(b) Operating state by axis

According to exercise from “Chapter 8.1.2 Current State Reading,” it is a signal of “Operating” for each axis. It turns on when it is operating. Operating Data Setting can not be configured while it is running hence configuration will only be configured when it is not running. If you execute Point Operation while it is running, the “error 231” would be appeared.

(c) Error state for each axis

According to exercise from “Chapter 8.1.2 Current State Reading,” it is a signal of “Error state” for each axis. It turns on when an error occurred. Operation will only work when there is no error. If you want to operate a system regardless of errors, you can just inactivate the function.

(d) Ready signal for each axes

According to exercise from “Chapter 8.1.2 Current State Reading,” it is a signal of “Drive Ready” for each axis. This command only works when the condition of Drive Ready is on.

(e) Address of Positioning Module

In this example, Positioning Module installed at the slot no.3 of 0 bases.

(f) Axis of command execution

You can set an axis for Parameter Setting. XGF series supports for 4 axes. In the “execution of axis” from the configuration of Parameter Setting, you can set a value for axis 1 through 4 axes.

(g) Address of first device where those data for Step Numbers of Point Operation are saved

To execute a Point Operation, you need to set a specific value first. XPWR commands are using for set up those Point Operation steps. It has to be done before actual Point Operation. Point Operation Step Data will be set up depends on number of first device as below table.

Value	Device No.	Point start step data
1	Device + 0	Point start step data 1
2	Device + 1	Point start step data 2
3	Device + 2	Point start step data 3
4	Device + 3	Point start step data 4
5	Device + 4	Point start step data 5
6	Device + 5	Point start step data 6
7	Device + 6	Point start step data 7
8	Device + 7	Point start step data 8
9	Device + 8	Point start step data 9
10	Device + 9	Point start step data 10
11	Device + 10	Point start step data 11
12	Device + 11	Point start step data 12
13	Device + 12	Point start step data 13
14	Device + 13	Point start step data 14
15	Device + 14	Point start step data 15
16	Device + 15	Point start step data16
17	Device + 16	Point start step data17
18	Device + 17	Point start step data18
19	Device + 18	Point start step data19
20	Device + 19	Point start step data20

(h) Amount of Saving Point Operation Steps

Decide how many data will be saved by using XTWR command. In this example above, 10 Point Operation steps are saved in the axis 1. Therefore those Step data from D01450~D01459 are saved in the module.

(i) Number of Operation amount by Point Operation

Set the number of saving Step numbers by Point Operating Writing command. For more information, reference for Setting of Point Operation is in the “Chapter 9.2.17.”

(j) In this program above, you can use command “PUT” instead of XPWR.

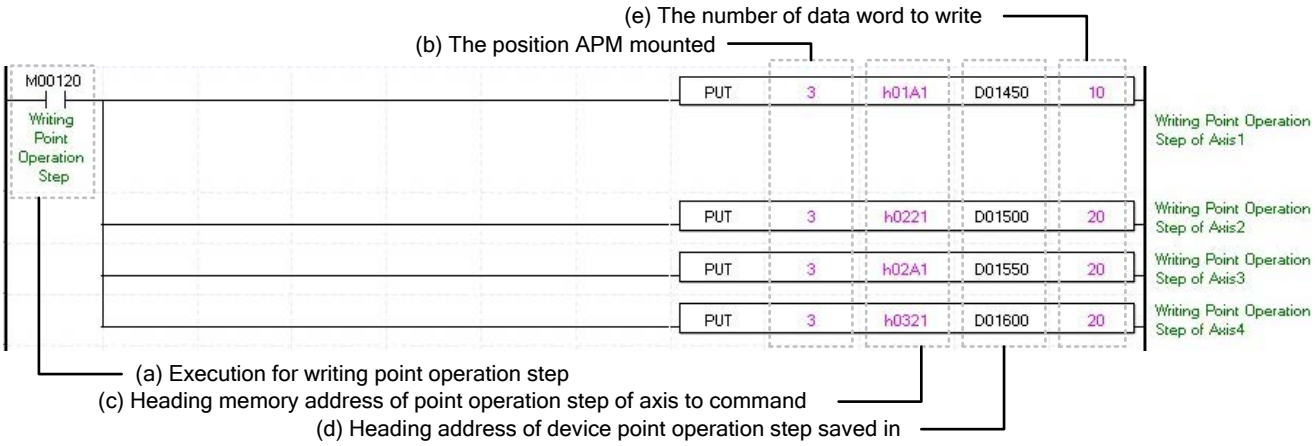

Setting a memory address for each axis of Point Operation step number, look up reference for Point Operation is in the “Chapter5.1.1.”

(7) Speed Synchronization

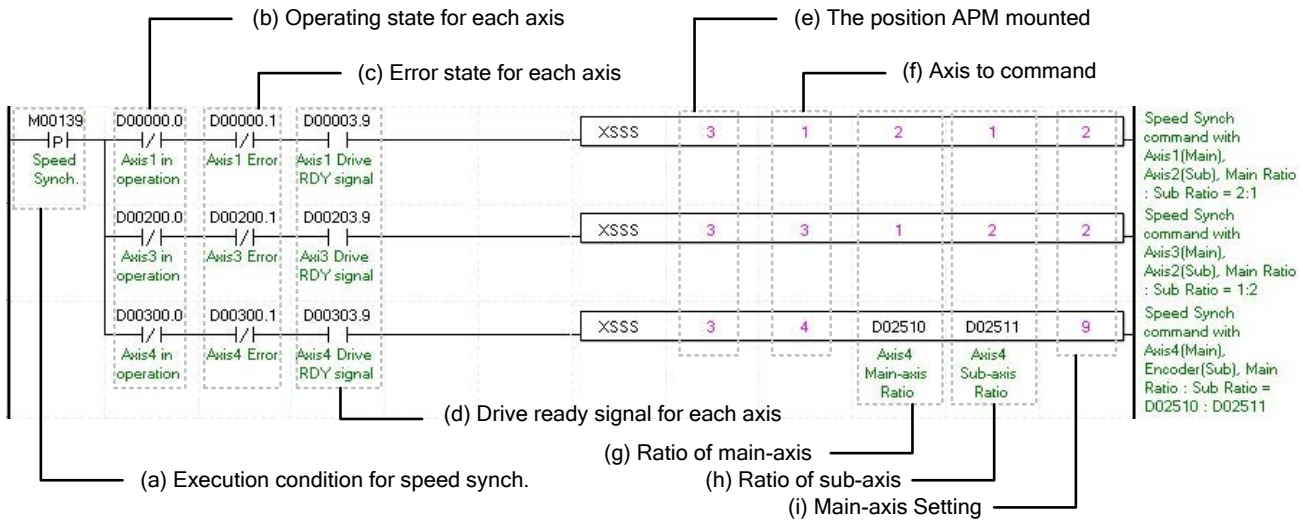

(a) Condition of Speed Synchronization

Condition of Speed Synchronization Command (XSSS)

(b) Operating state by axis

According to exercise from “Chapter 8.1.2 Current State Reading,” it is a signal of “Operating” for each axis. It turns on when it is operating. Operating Data Setting can not be configured while it is running hence configuration will only be configured when it is not running. If you execute Speed Synchronization while it is running, the “error 351” would be appeared.

(c) Error state for each axis

According to exercise from “Chapter 8.1.2 Current State Reading,” it is a signal of “Error state” for each axis. It turns on when an error occurred. Operation will only work when there is no error. If you want to operate a system regardless of errors, you can just inactivate the function.

(d) Ready signal for each axis

According to exercise from “Chapter 8.1.2 Current State Reading,” it is a signal of “Drive Ready” for each axis. This command only works when the condition of Drive Ready is on. If a Drive Ready of main axis is not set as “ON,” the “error 354” would be appeared.

(e) Address of Positioning Module

In this example, Positioning Module installed at the slot no.3 of 0 bases.

(f) Axis of command execution

You can set an axis for Parameter Setting. XGF series supports for 4 axes. In the “execution of axis” from the configuration of Parameter Setting, you can set a value for axis 1 through 4 axes.

(g) Ratio of Main Axis

Set value for Ratio of Main Axis to execute a Speed Synchronization.

(h) Ratio of Subordinate Axis

Set value for Ratio of Subordinate Axis to execute a Speed Synchronization. In this example above, the ratio of main and subordinate axis is 2:1. Meaning that operational speed ratio of those axes is 2 to 1. So, if main axis is operating in speed of 10000, subordinate axis will be operating in speed of 5000.

(i) Main Axis Setting

Setting of main axis to operate Speed Synchronization. This setting is for main axis of Speed Synchronization. This setting cannot be set as same value as command axis, and possible setting values are as below.

Setting value	Main Axis
1	Axis1
2	Axis2
3	Axis3
4	Axis4
5	-
6	-
7	-
8	-
9	Encoder

(k) For more information, reference for Speed Synchronization is in the “Chapter 9.4.1.”

(8) Position Assign Speed Synchronization

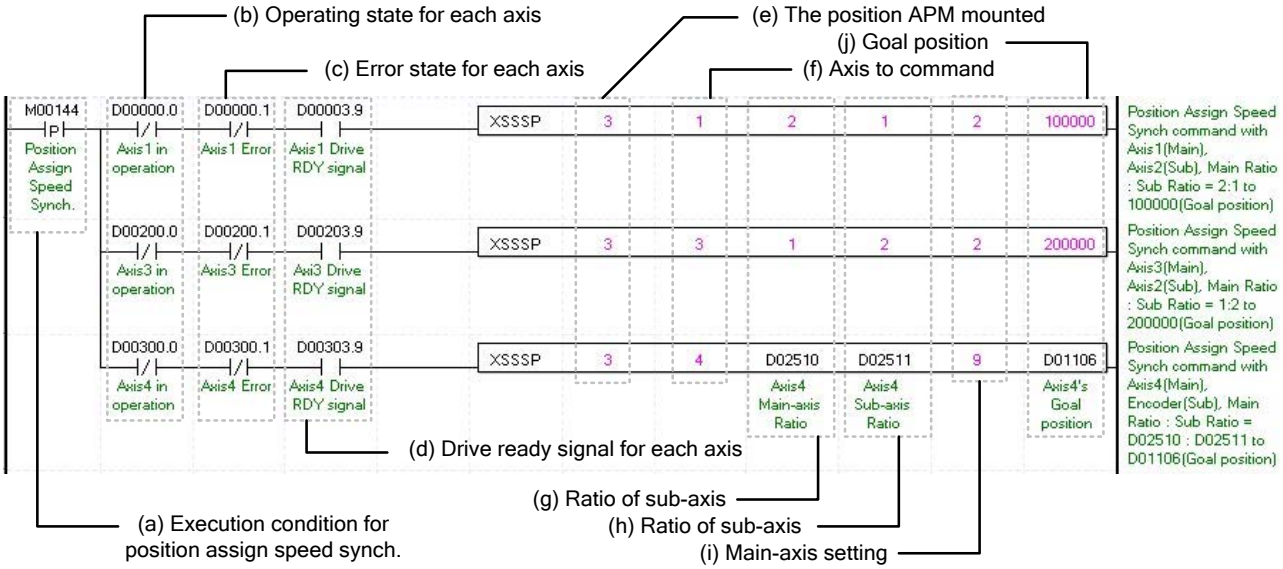

(a) Condition of Position Assign Speed Synchronization

Condition of Position Assign Speed Synchronization Command (XSSSP)

(b) Operating state by axis

According to exercise from “Chapter 8.1.2 Current State Reading,” it is a signal of “Operating” for each axis. It turns on when it is operating. Operating Data Setting can not be configured while it is running hence configuration will only be configured if it is not running. If you execute Position Assign Speed Synchronization while it is running, the “error 351” would be appeared.

(c) Error state for each axis

According to exercise from “Chapter 8.1.2 Current State Reading,” it is a signal of “Error state” for each axis. It turns on when an error occurred. Operation will only work when there is no error. If you want to operate a system regardless of errors, you can just inactivate the function.

(d) Ready signal for each axes

According to exercise from “Chapter 8.1.2 Current State Reading,” it is a signal of “Drive Ready” for each axis. This command only works when the condition of Drive Ready is on. If a Drive Ready of main axis is not set as “ON,” the “error 354” would be appeared.

(e) Address of Positioning Module

In this example, Positioning Module installed at the slot no.3 of 0 bases.

(f) Axis of command execution

You can set an axis for Parameter Setting. XGF series supports for 4 axes. In the “execution of axis” from the configuration of Parameter Setting, you can set a value for axis 1 through 4 axes.

(g) Ratio of Main Axis

Set value for Ratio of Main Axis to execute a Speed Synchronization.

(h) Ratio of Subordinate Axis

Set value for Ratio of Subordinate Axis to execute a Speed Synchronization. In this example above, the ratio of main and subordinate axis is 2:1. Meaning that operational speed ratio of those axes is 2 to 1. So, if main axis is operating in speed of 10000, subordinate axis will be operating in speed of 5000.

(i) Main Axis Setting

Setting of main axis to operate Speed Synchronization. This setting is for main axis of Speed Synchronization. This setting cannot be set as same value as command axis, and possible setting values are as below.

Setting value	Main Axis
1	Axis1
2	Axis2
3	Axis3
4	Axis4
5	-
6	-
7	-
8	-
9	Encoder

(j) Goal Position

Set goal of Position Assign Speed Synchronization. Once command axis reaches the goal position, Speed Synchronization ends and operation will be stop immediately.

(k) For more information, reference for Position Assign Speed Synchronization is in the “Chapter 9.4.1.”

(9) Synchronous Start by Position

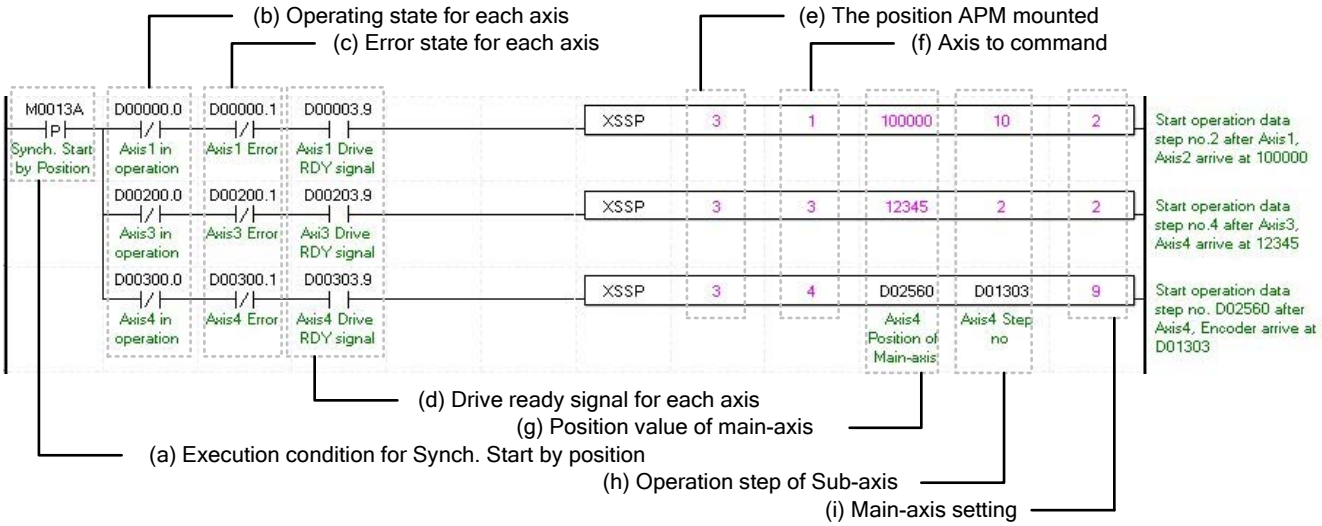

(a) Condition of Synchronous Start by Position

Condition of Synchronous Start by Position Command (XSSP)

(b) Operating state by axis

According to exercise from “Chapter 8.1.2 Current State Reading,” it is a signal of “Operating” for each axis. It turns on when it is operating. Operating Data Setting can not be configured while it is running hence configuration will only be configured when it is not running. If you execute Synchronous Start by Position while it is running, the “error 341” would be appeared.

(c) Error state for each axis

According to exercise from “Chapter 8.1.2 Current State Reading,” it is a signal of “Error state” for each axis. It turns on when an error occurred. Operation will only work when there is no error. If you want to operate a system regardless of errors, you can just inactivate the function.

(d) Ready signal for each axes

According to exercise from “Chapter 8.1.2 Current State Reading,” it is a signal of “Drive Ready” for each axis. This command only works when the condition of Drive Ready is on. If a Drive Ready of main axis is not set as “ON,” the “error 354” would be appeared.

(e) Address of Positioning Module

In this example, Positioning Module installed at the slot no.3 of 0 bases.

(f) Axis of command execution

You can set an axis for Parameter Setting. XGF series supports for 4 axes. In the “execution of axis” from the configuration of Parameter Setting, you can set a value for axis 1 through 4 axes.

(g) Value of Main Axis

Set value for Main Axis to execute Synchronous Start by Position. Therefore main axis will be executed the command when the subordinate axis reaches this set value.

(h) Step of Subordinate Axis

Set step number for Subordinate Axis to execute a Speed Synchronization.

(i) Main Axis Setting

Setting of main axis to operate Speed Synchronization. This setting is for main axis of Speed Synchronization.

This setting cannot be set as same value as command axis, and possible setting values are as below.

Setting value	Main Axis
1	Axis1
2	Axis2
3	Axis3
4	Axis4
5	-
6	-
7	-
8	-
9	Encoder

(k) For more information, reference for Synchronous Start by Position is in the “Chapter 9.4.2.”

(10) CAM Operation

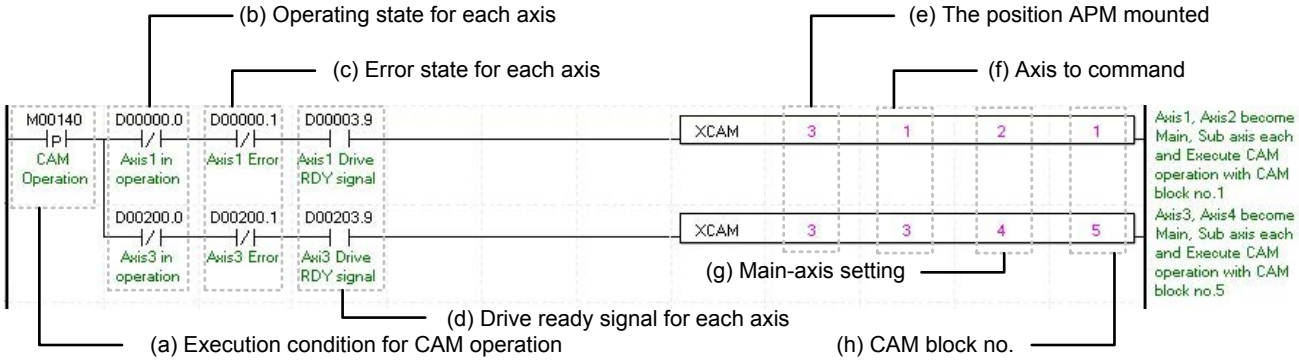

(a) Condition of CAM Operation

Condition of CAM Operation Command (XCAM)

(b) Operating state by axis

According to exercise from “Chapter 8.1.2 Current State Reading,” it is a signal of “Operating” for each axis. It turns on when it is operating. Operating Data Setting can not be configured while it is running hence configuration will only be configured when it is not running. If you execute CAM Operation while it is running, the “error 701” would be appeared.

(c) Error state for each axis

According to exercise from “Chapter 8.1.2 Current State Reading,” it is a signal of “Error state” for each axis. It turns on when an error occurred. Operation will only work when there is no error. If you want to operate a system regardless of errors, you can just inactivate the function.

(d) Ready signal for each axes

According to exercise from “Chapter 8.1.2 Current State Reading,” it is a signal of “Drive Ready” for each axis. This command only works when the condition of Drive Ready is on. If a Drive Ready of main axis is not set as “ON,” the “error 703” would be appeared.

(e) Address of Positioning Module

In this example, Positioning Module installed at the slot no.3 of 0 bases.

(f) Axis of command execution

You can set an axis for Parameter Setting. XGF series supports for 4 axes. In the “execution of axis” from the configuration of Parameter Setting, you can set a value for axis 1 through 4 axes.

(g) Main Axis Setting

Setting of main axis to operate .This setting is for main axis of CAM Operating. This setting cannot be set as same value as command axis. Can set a value 1~4, meaning from axis 1 to axis 4.

(h) CAM Block Numbers

Setting for Block Numbers of CAM data to operate CAM operation. XGF series support 8 CAM Blocks. The CAM Data for each Block would be downloaded to module written from Software Package.

(i) For more information, reference of CAM Operation is in the “Chapter 9.4.3.”

(11) Deceleration Stop

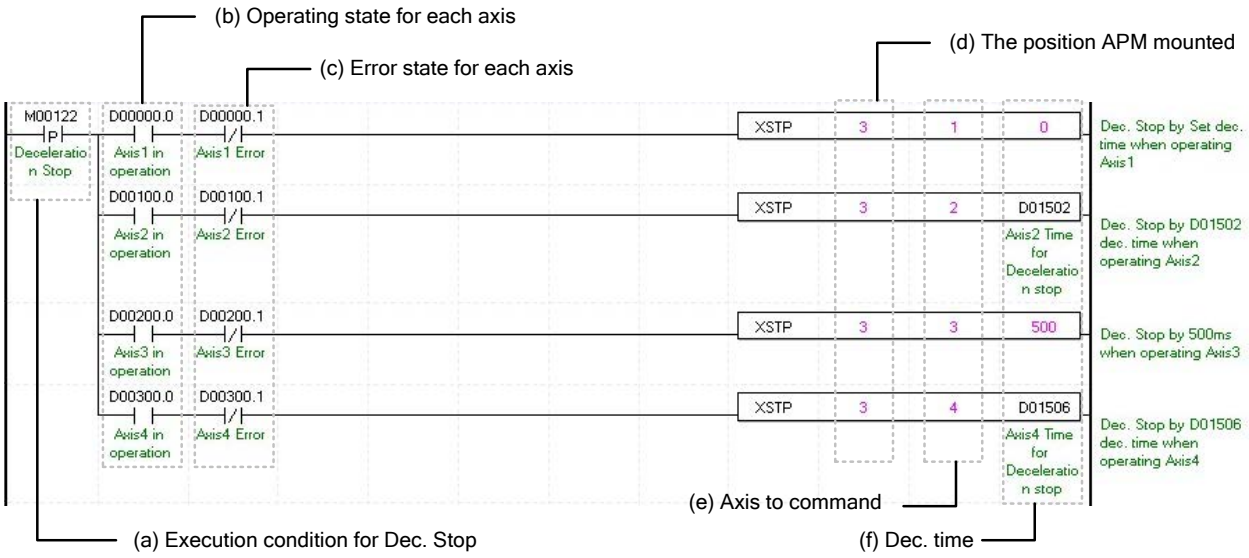

(a) Condition of Deceleration Stop

Condition of Deceleration Stop Command (XSTP)

(b) Operating state by axis

According to exercise from “Chapter 8.1.2 Current State Reading,” it is a signal of “Operating” for each axis. It turns on when it is operating. Operating Data Setting can not be configured while it is running hence configuration will only be configured when it is not running.

(c) Error state for each axis

According to exercise from “Chapter 8.1.2 Current State Reading,” it is a signal of “Error state” for each axis. It turns on when an error occurred. Operation will only work when there is no error. If you want to operate a system regardless of errors, you can just inactivate the function.

(d) Address of Positioning Module

In this example, Positioning Module installed at the slot no.3 of 0 bases.

(e) Axis of command execution

You can set an axis for Parameter Setting. XGF series supports for 4 axes. In the “execution of axis” from the configuration of Parameter Setting, you can set a value for axis 1 through 4 axes.

(f) Deceleration time of Deceleration Stop

Setting a deceleration time of Deceleration Stop operation. Unit of Deceleration Stop is [ms]. Since this time refers deceleration time from the speed limit, there might be little difference between Deceleration Stop set time and actual stop time. The range of deceleration time is “0~2,147,483,674.” 1~2,147,483,674 means Deceleration Time set as 1ms ~ 2,147483674ms. If it set as “0,” it will be operated with set deceleration value. Also it use to stop Speed Synchronous Operation or CAM Operation while Speed and CAM Operation. During this time Deceleration Time is meaningless, CAM Operation Is just cancelled.

(g) For more information, reference of Deceleration Stop is in the “Chapter 9.2.18.”

(12) Emergency Stop

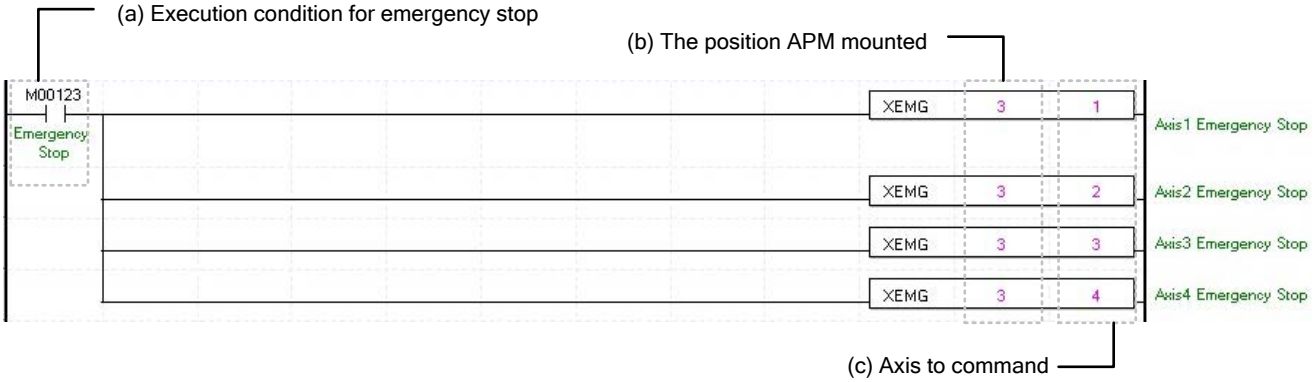

(a) Condition of Emergency Stop

Condition of Emergency Stop Command (XEMG)

(b) Address of Positioning Module

In this example, Positioning Module installed at the slot no.3 of 0 bases.

(c) Axis of command execution

You can set an axis for Parameter Setting. XGF series supports for 4 axes. In the “execution of axis” from the configuration of Parameter Setting, you can set a value for axis 1 through 4 axes.

(d) Emergency Stop is operating by each axis.

Once Emergency Stop command executes the error “481” would be occurred. With the set value for deceleration time, it will be decelerated and stop the operation

(e) For more information, reference of Emergency Stop is in the “Chapter 9.2.18.”

(13) M code Cancellation

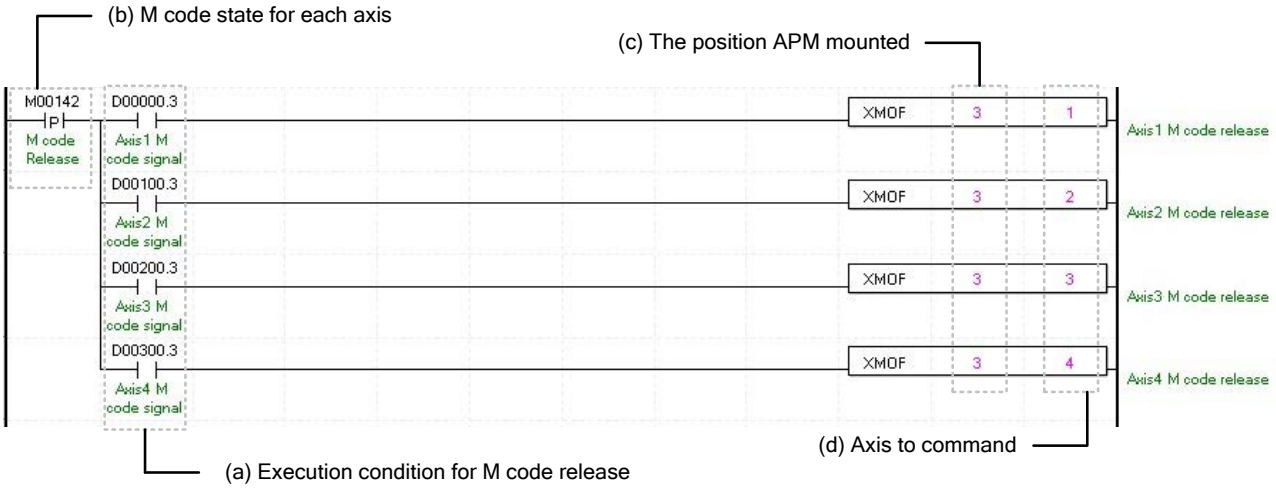

(a) Condition of M code Cancellation

Condition of M code Cancellation (XMOF). Once M code Cancellation command executed, number of M code would be change to “0,” and signal of M code to “Off.”

(b) M code state for each axis

According to exercise from “Chapter 8.1.2 Current State Reading,” it is a signal of “M Code” for each axis. It turns on when it is operating. M code Cancellation command can only be valid once M code are generated. The condition for execution is operation possible when it is “On.”

(c) Address of Positioning Module

In this example, Positioning Module installed at the slot no.3 of 0 bases.

(d) Axis of command execution

You can set an axis for Parameter Setting. XGF series supports for 4 axes. In the “execution of axis” from the configuration of Parameter Setting, you can set a value for axis 1 through 4 axes.

(e) For more information, reference of M code Cancellation is in the “Chapter 9.6.2.”

(14) Setting Position Output Enable/Disable

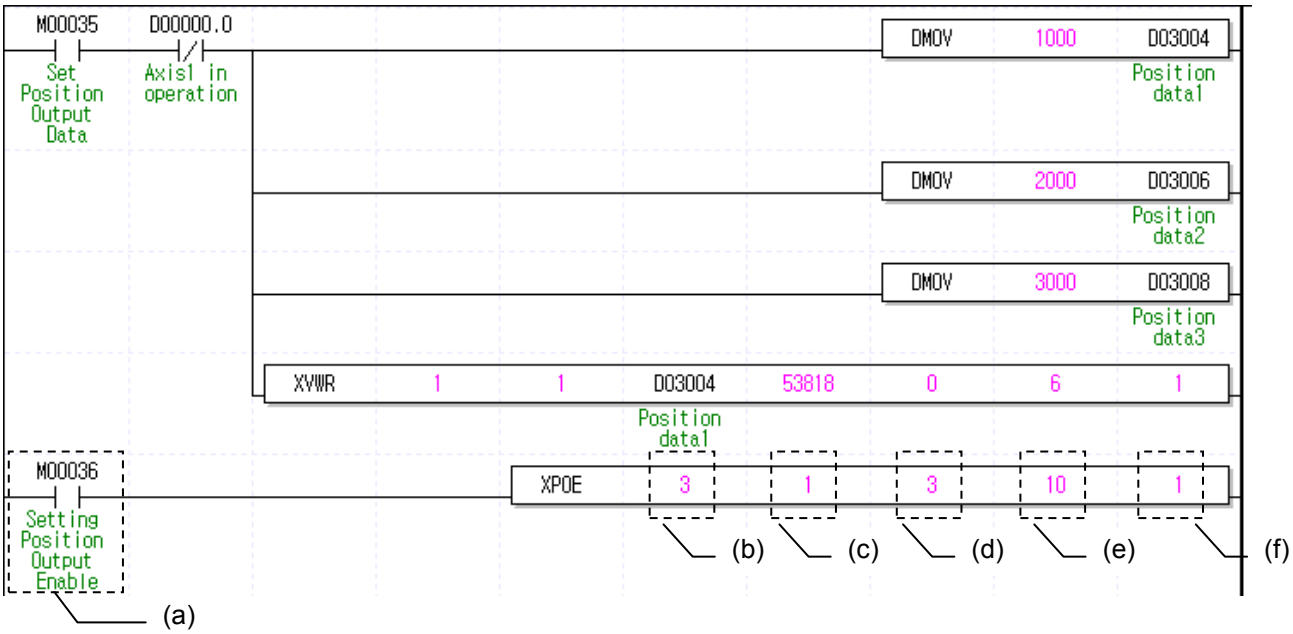

(a) Condition of Setting Position Output Enable

Condition of Setting Position Output Enable (XPOE). It describes conditions to implement the Setting Position Output Enable/Disable command (XPOE). The Setting Position Output Enable/Disable command is the one to permit or prohibit the setting position output function.

(b) Address of Positioning Module

In this example, Positioning Module installed at the slot no.3 of 0 bases.

(c) Axis of command execution

You can set an axis for Setting Position Output Enable/Disable command. XGF series supports for 4 axes. In the “execution of axis” from the configuration of Parameter Setting, you can set a value for axis 1 through 4 axes.

(d) The number of data

Set the number of data of the setting position output signal’s position data. As the number of data, the following values can be set. 0 ~ 50 (If data count is 0, it means it sets (f) Enable/Disable operand 0: Disable.)

(e) Retention Time

Set time from the time when the setting position output signal is On to the time when it is Off. If the current position becomes the setting position that has been set, it will be off after when the set time lapses after the position output signal is On.

(f) Enable/Disable

Set whether to enable or disable the setting position output function. The following values can be set. If the setting position output function is disabled and an order is issued, the current signal will be immediately OFF.

(g) Set the position data of setting position output first and then enable the setting position output function. In the example, three position data are set to Axis 1's setting position output by using the Write Variable Data command (XVWR). The Setting Position Output Enable/Disable command enables the setting position output function that has three setting position data for Axis 1 and 10ms for retention time. If the setting position output function is enabled through the Setting Position Output enable/Disable command, the setting position output signal will be On at Position 1000, 2000 and 3000 for 10ms respectively and then after 10 m, it will be off.

(h) For more information, reference of Setting Position Output Enable/Disable is in the "Chapter 9.6.2."

8.1.6 Operation Setting Change while Operating

(1) Speed Override

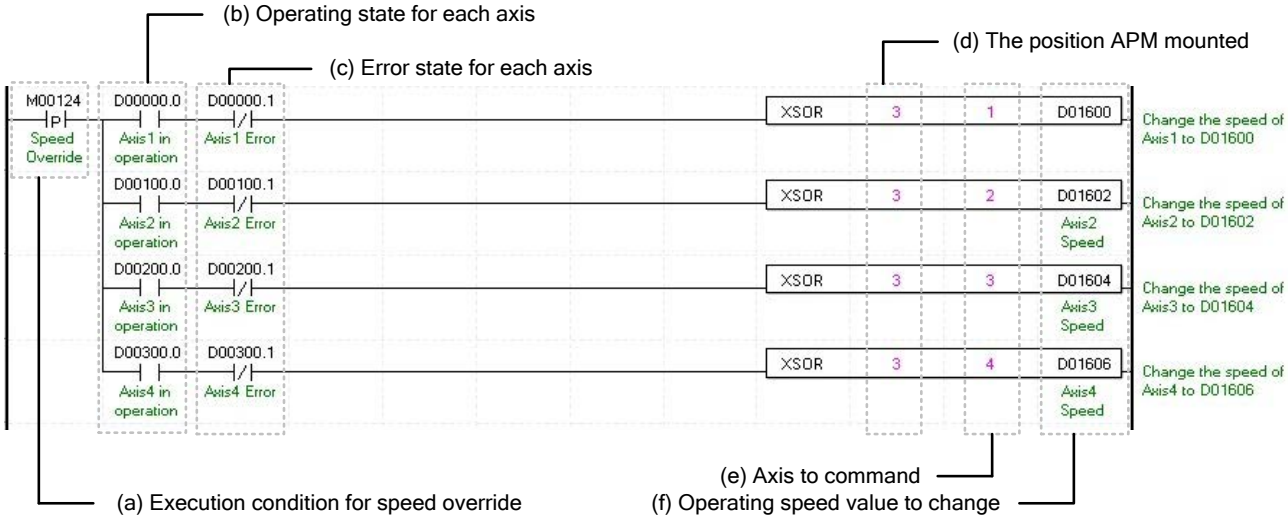

(a) Condition of Speed Override

Condition of Speed Override Command (XSOR)

(b) Operating state by axis

According to exercise from “Chapter 8.1.2 Current State Reading,” it is a signal of “Operating” for each axis. It turns on when it is operating. Operating Data Setting can not be configured while it is running hence configuration will only be configured when it is not running. If you execute Speed Override while it is running, the “error 371” would be appeared.

(c) Error state for each axis

According to exercise from “Chapter 8.1.2 Current State Reading,” it is a signal of “Error state” for each axis. It turns on when an error occurred. Operation will only work when there is no error. If you want to operate a system regardless of errors, you can just inactivate the function.

(d) Address of Positioning Module

In this example, Positioning Module installed at the slot no.3 of 0 bases.

(e) Axis of command execution

You can set an axis for Speed Override command. XGF series supports for 4 axes. In the “execution of axis” from the configuration of Parameter Setting, you can set a value for axis 1 through 4 axes.

(f) Value Change for Speed Operation

Setting Value Change for Speed Operation. According to Speed Override from common parameters, it is a signal of “%” or “Speed Value” depends on setting of category. Also, when Speed Override set as Speed Value, it means Unit/Time depends on Speed Command Unit from basic parameters, or it means “rpm.” If a changing Operation Speed Value is “%,” then the unit would be [$X10^{-2}$%]. If it is “rpm, “then the unit would be $X10^{-1}$rpm].

(g) For more information, reference of Speed Override is in the “Chapter 9.5.5.”

(2) Position Override

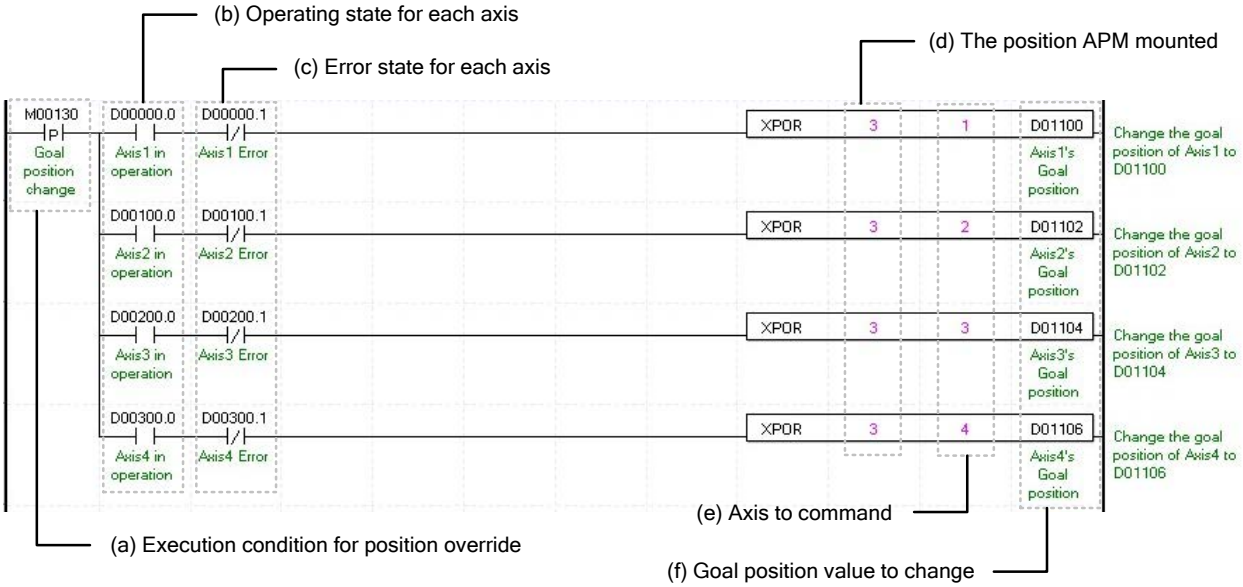

(a) Condition of Position Override

Condition of Position Override Command (XPOR)

(b) Operating state by axis

According to exercise from “Chapter 8.1.2 Current State Reading,” it is a signal of “Operating” for each axis. It turns on when it is operating. Operating Data Setting can not be configured while it is running hence configuration will only be configured when it is not running. If you execute Position Override while it is running, the “error 361” would be appeared.

(c) Error state for each axis

According to exercise from “Chapter 8.1.2 Current State Reading,” it is a signal of “Error state” for each axis. It turns on when an error occurred. Operation will only work when there is no error. If you want to operate a system regardless of errors, you can just inactivate the function.

(d) Address of Positioning Module

In this example, Positioning Module installed at the slot no.3 of 0 bases.

(e) Axis of command execution

You can set an axis for Parameter Setting. XGF series supports for 4 axes. In the “execution of axis” from the configuration of Parameter Setting, you can set a value for axis 1 through 4 axes.

(f) Change for Goal Position Value

Setting Value Change for Goal Position Value. The unit of this value depends on “Unit” category. Once Position Override commands are executed, the goal position of executed axis will be changed to set goal position.

(g) For more information, reference of Position Override is in the “Chapter 9.5.4.”

(3) Position Assign Speed Override

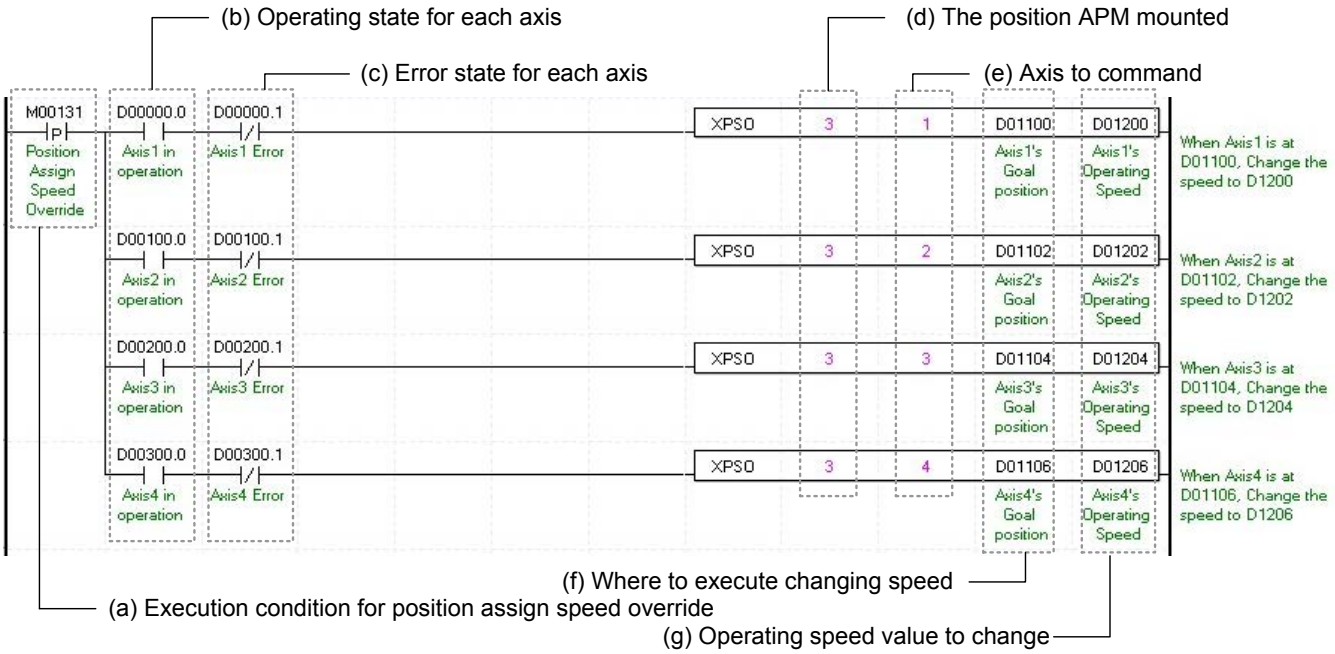

(a) Condition of Position Assign Speed Override

Condition of Position Assign Speed Override Command (XPSO)

(b) Operating state by axis

According to exercise from “Chapter 8.1.2 Current State Reading,” it is a signal of “Operating” for each axis. It turns on when it is operating. Operating Data Setting can not be configured while it is running hence configuration will only be configured when it is not running. If you execute Position Assign Speed Override while it is running, the “error 381” would be appeared.

(c) Error state for each axis

According to exercise from “Chapter 8.1.2 Current State Reading,” it is a signal of “Error state” for each axis. It turns on when an error occurred. Operation will only work when there is no error. If you want to operate a system regardless of errors, you can just inactivate the function.

(d) Address of Positioning Module

In this example, Positioning Module installed at the slot no.3 of 0 bases.

(e) Axis of command execution

You can set an axis for Parameter Setting. XGF series supports for 4 axes. In the “execution of axis” from the configuration of Parameter Setting, you can set a value for axis 1 through 4 axes.

(f) Position of Speed Change Execution

Setting position of Speed Change. Once the actual position located at set position with speed override command running, the speed change commands are executed.

(g) Value Change for Operation speed

Setting Value Change for Operation speed. According to Speed Override from common parameters, it is a signal of "%" or "Speed Value" depends on setting of category. Also, when Speed Override set as Speed Value, it means Unit/Time depends on Speed Command Unit from basic parameters, or it means "rpm." If a changing Operation Speed Value is "%," then the unit would be [$X10^{-2}$%]. If it is "rpm, "then the unit would be $X10^{-1}$rpm].

(h) For more information, reference of Position Assign Speed Override is in the "Chapter 9.5.6."

(4) Speed/Position Switching Control

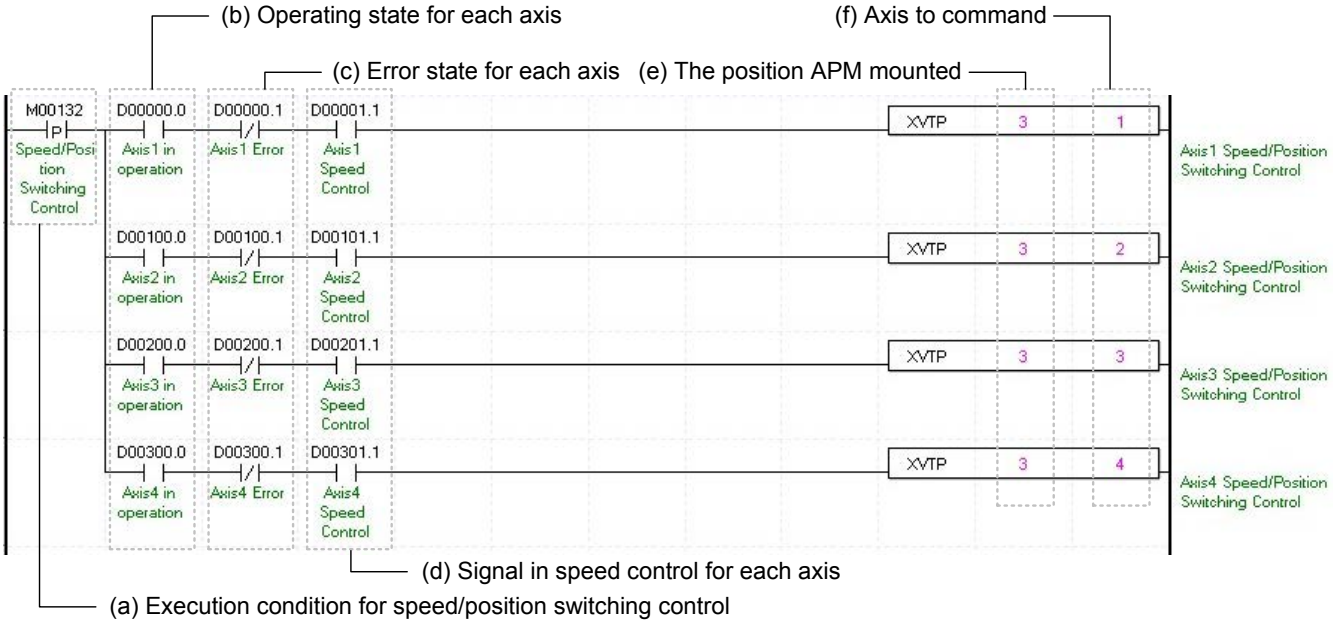

(a) Condition of Speed/Position Switching Control

Condition of Speed/Position Switching Control Command (XVTP)

(b) Operating state by axis

According to exercise from “Chapter 8.1.2 Current State Reading,” it is a signal of “Operating” for each axis. It turns on when it is operating. Operating Data Setting can not be configured while it is running hence configuration will only be configured when it is not running. If you execute Speed/Position Switching Control while it is running, the “error 301” would be appeared.

(c) Error state for each axis

According to exercise from “Chapter 8.1.2 Current State Reading,” it is a signal of “Error state” for each axis. It turns on when an error occurred. Operation will only work when there is no error. If you want to operate a system regardless of errors, you can just inactivate the function.

(d) Signal from Speed Control by each Axis

According to exercise from “Chapter 8.1.2 Current State Reading,” it is a signal of “Speed Control state” for each axis. It turns on when it is operating. Speed/Position Switching Control Setting can only be configured while it is running. If you execute Speed/Position Switching Control while it is not running, the “error 302” would be appeared.

(e) Address of Positioning Module

In this example, Positioning Module installed at the slot no.3 of 0 bases.

(f) Axis of command execution

You can set an axis for Parameter Setting. XGF series supports for 4 axes. In the “execution of axis” from the configuration of Parameter Setting, you can set a value for axis 1 through 4 axes.

(g) For more information, reference of Speed/Position Switching Control is in the “Chapter 9.2.14.”

(5) Position-specified Speed/Position Control Switching

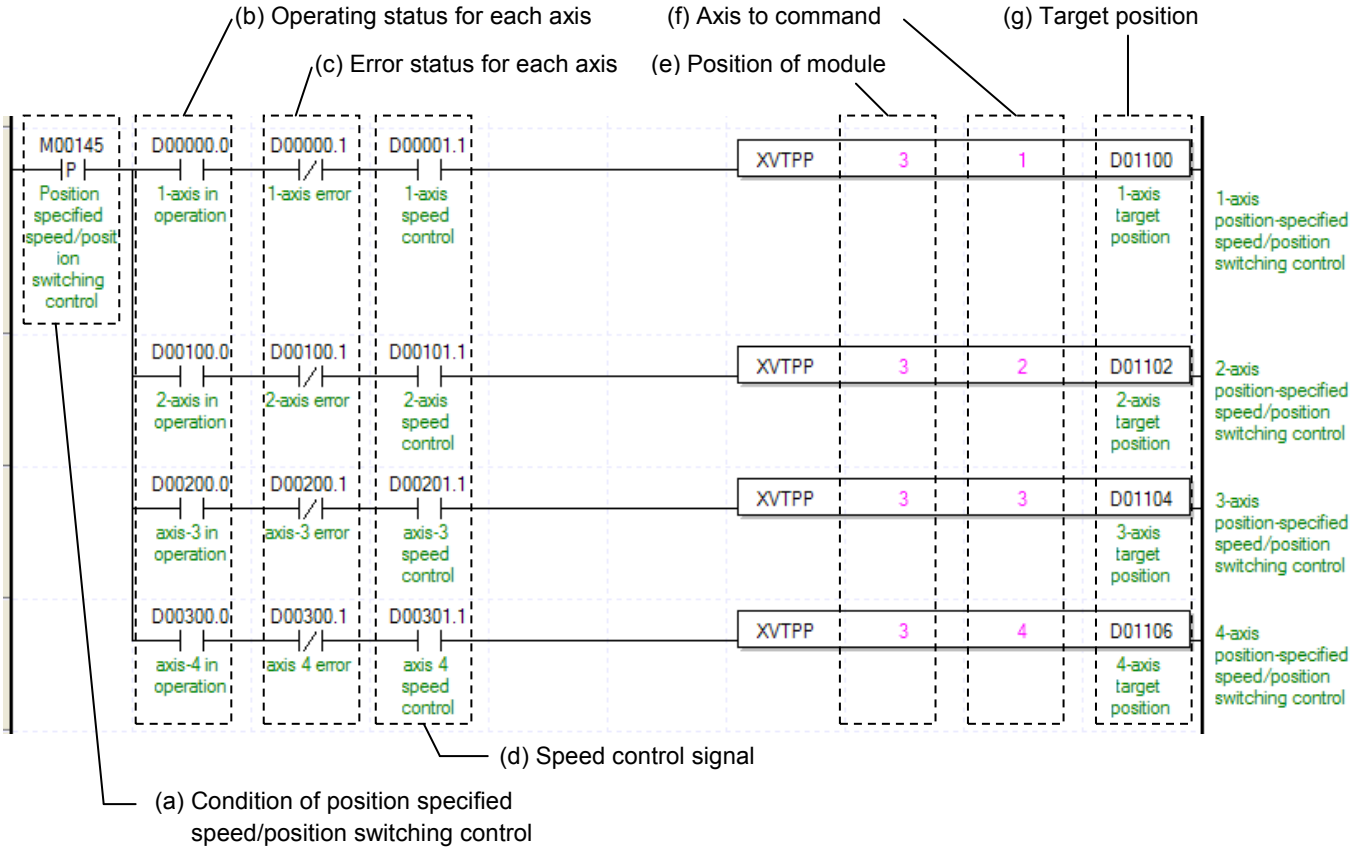

(a) Condition to perform "position-specified speed/position switching control"

Condition to perform control command (XVTPP) for position-specified speed/position switching

(b) Operation state for each axis

In case that an example program of"8.1.2 Read Current State" is applied, it is a signal showing that each axis is "operating." If a relevant axis is running, it becomes 'On'. A condition has been set to make the control command for position specified speed/position switching valid only when the relevant axis is running. If the control command for position specified switching is carried out when the relevant axis is not running, No.301 Error will take place.

(c) Error State for each axis

In case that an example program of"8.1.2 Read Current State" is applied, it is a signal showing "Error State" for each axis. If any error takes place, it becomes 'On'. A condition has been set to perform a control command only when there is no error with the relevant axis. If the user wants to execute a command regardless of the occurrence of errors, he/she may remove this condition.

(d) Speed Control Signal for each axis

In case that an example program of"8.1.2 Read Current State" is applied, it is a signal showing each axis is "controlling its speed." If the relevant axis is running under speed control, it becomes 'On.' A condition has been set to make the control command for position specified speed/position switching control valid only when the relevant axis is in a speed control status. If the control command is carried out when the relevant axis is not in a speed control status, No.302 Error will take place.

(e) Position of a module

For the example program above, it is assumed that positioning modules are installed on NO.0 Base and No. 3 Slot.

(f) Axis to make a command

Decide an axis that will execute the control command. XGF-P□□H can control up to four axes and assign 1 through 4 referring to 1-axis through 4-axis for this item.

(g) Transfer amount

After the control command for position specified speed/position control switching is executed, convert from speed control to position control and moves by transfer amount.

(h) For details on the operation of position specified speed/position switching control, refer to “position specified speed/position switching control”

(6) Position/ Speed Switching Control

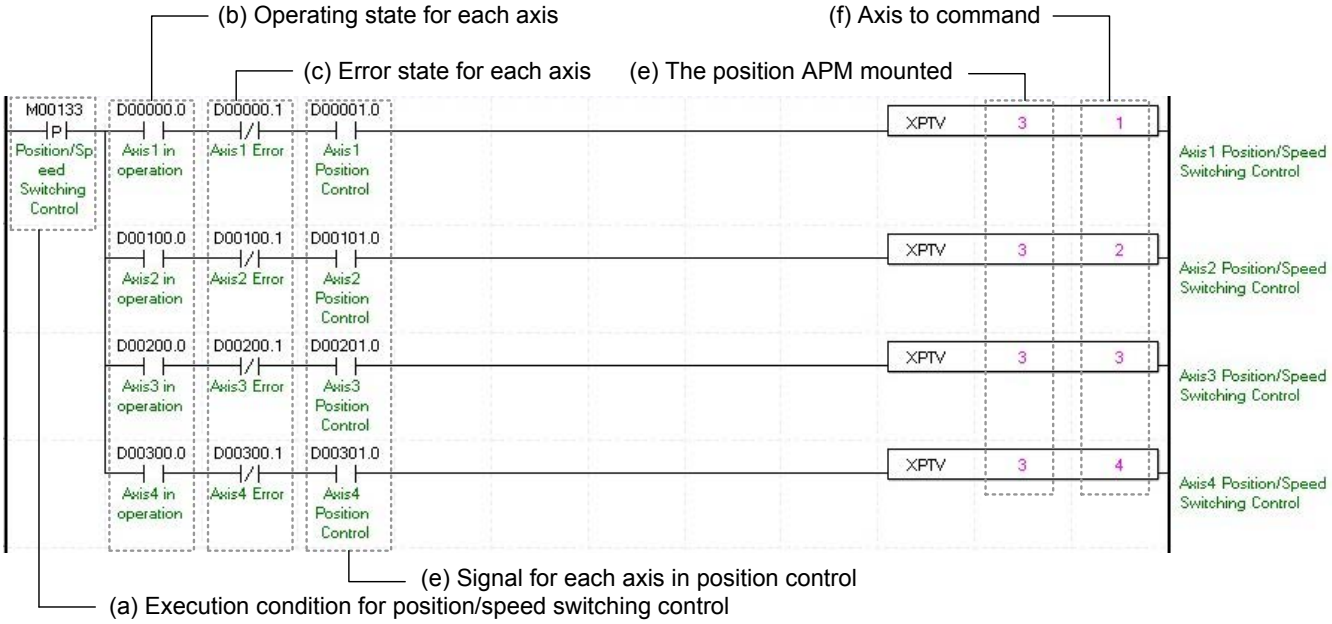

(a) Condition of Position/ Speed Switching Control

Condition of Position/ Speed Switching Control Command (XPTV)

(b) Operating state by axis

According to exercise from “Chapter 8.1.2 Current State Reading,” it is a signal of “Operating” for each axis. It turns on when it is operating. Operating Data Setting can not be configured while it is running hence configuration will only be configured when it is not running. If you execute Position/ Speed Switching Control while it is running, the “error 311” would be appeared.

(c) Error state for each axis

According to exercise from “Chapter 8.1.2 Current State Reading,” it is a signal of “Error state” for each axis. It turns on when an error occurred. Operation will only work when there is no error. If you want to operate a system regardless of errors, you can just inactivate the function.

(d) Signal from Position Control by each Axis

According to exercise from “Chapter 8.1.2 Current State Reading,” it is a signal of “Position Control state” for each axis. It turns on when it is operating. Position/ Speed Switching Control Setting can only be configured while it is running. If you execute Position/Speed Switching Control while it is not running, the “error 317” would be appeared.

(e) Address of Positioning Module

In this example, Positioning Module installed at the slot no.3 of 0 bases.

(f) Axis of command execution

You can set an axis for Parameter Setting. XGF series supports for 4 axes. In the “execution of axis” from the configuration of Parameter Setting, you can set a value for axis 1 through 4 axes.

(g) For more information, reference of Position/ Speed Switching Control is in the “Chapter 9.2.15.”

(7) Skip Operation

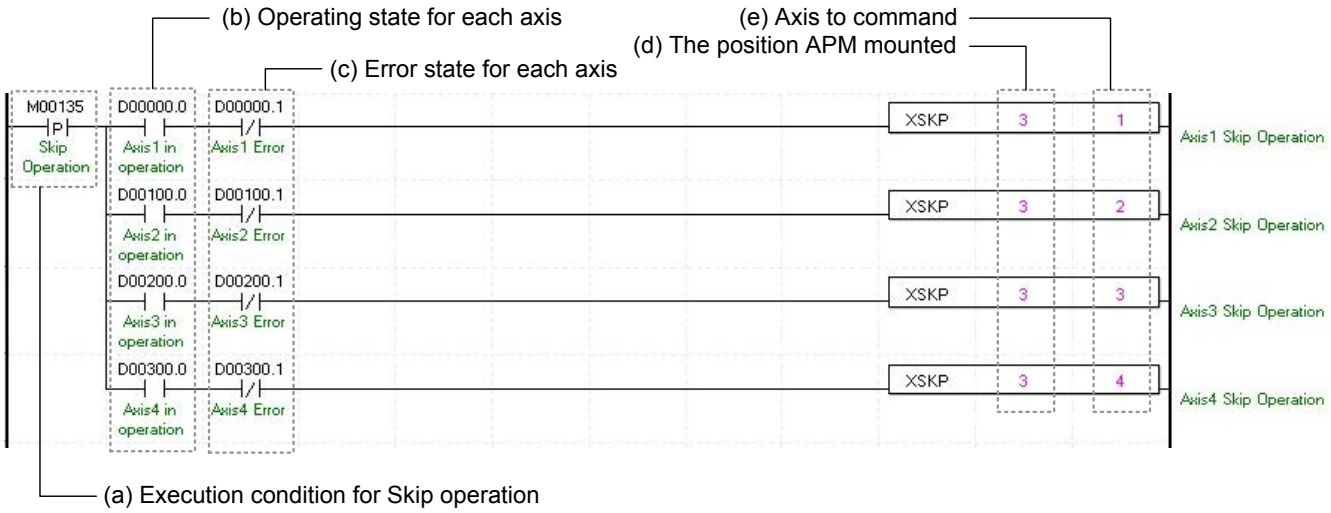

(a) Condition of Skip Operation

Condition of Skip Operation Command (XSKP) Once Skip Operation is executed, current operation step is stop and will go to operate with next step.

(b) Operating state by axis

According to exercise from “Chapter 8.1.2 Current State Reading,” it is a signal of “Operating” for each axis. It turns on when it is operating. Operating Data Setting can not be configured while it is running hence configuration will only be configured when it is not running. If you execute Skip Operation while it is running, the “error 331” would be appeared.

(c) Error state for each axis

According to exercise from “Chapter 8.1.2 Current State Reading,” it is a signal of “Error state” for each axis. It turns on when an error occurred. Operation will only work when there is no error. If you want to operate a system regardless of errors, you can just inactivate the function.

(d) Address of Positioning Module

In this example, Positioning Module installed at the slot no.3 of 0 bases.

(e) Axis of command execution

You can set an axis for Parameter Setting. XGF series supports for 4 axes. In the “execution of axis” from the configuration of Parameter Setting, you can set a value for axis 1 through 4 axes.

(f) For more information, reference of Skip Operation is in the “Chapter 9.5.3”.

(8) Continuous Operation

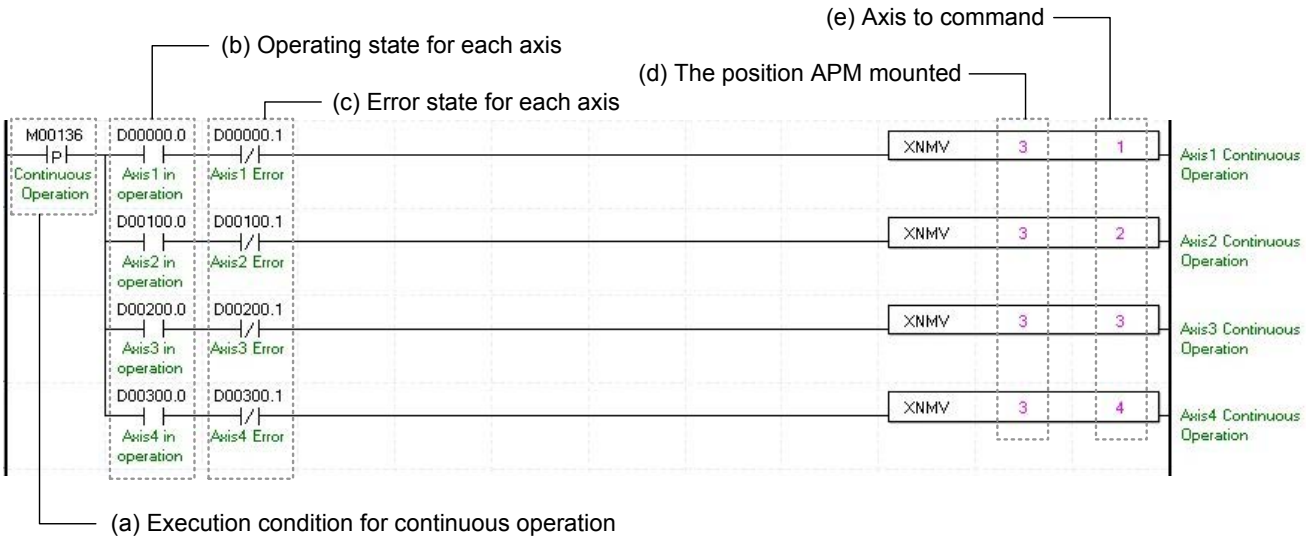

(a) Condition of Continuous Operation

Condition of Continuous Operation Command (XNMV). Once Continuous Operation is executed, current operation step and next operation step would be operated continuously.

(b) Operating state by axis

According to exercise from “Chapter 8.1.2 Current State Reading,” it is a signal of “Operating” for each axis. It turns on when it is operating. Operating Data Setting can not be configured while it is running hence configuration will only be configured when it is not running. If you execute Continuous Operation while it is running, the “error 391” would be appeared.

(c) Error state for each axis

According to exercise from “Chapter 8.1.2 Current State Reading,” it is a signal of “Error state” for each axis. It turns on when an error occurred. Operation will only work when there is no error. If you want to operate a system regardless of errors, you can just inactivate the function.

(d) Address of Positioning Module

In this example, Positioning Module installed at the slot no.3 of 0 bases.

(e) Axis of command execution

You can set an axis for Parameter Setting. XGF series supports for 4 axes. In the “execution of axis” from the configuration of Parameter Setting, you can set a value for axis 1 through 4 axes.

(f) For more information, reference of Continuous Operation is in the “Chapter 9.5.2”.

(9) Current Step Change (Start Step Number Change)

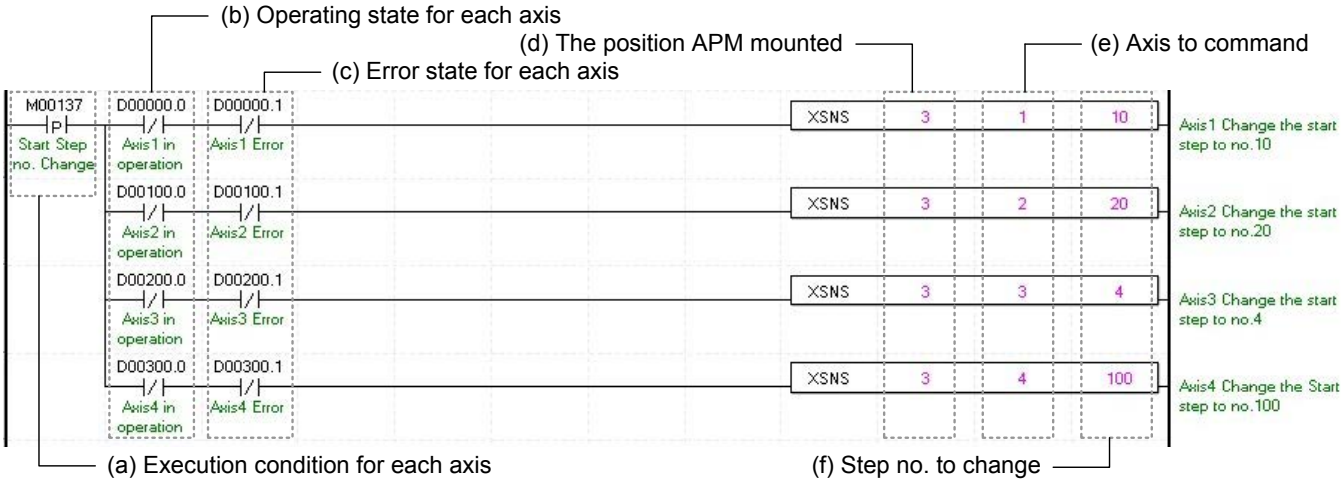

(a) Condition of Current Step Change

Condition of Current Step Change Command (XSNS). Once Current Step Change is executed, current operation step will move set step.

(b) Operating state by axis

According to exercise from “Chapter 8.1.2 Current State Reading,” it is a signal of “Operating” for each axis. It turns on when it is operating. Operating Data Setting can not be configured while it is running hence configuration will only be configured when it is not running. If you execute Current Step Change while it is running, the “error 441” would be appeared.

(c) Error state for each axis

According to exercise from “Chapter 8.1.2 Current State Reading,” it is a signal of “Error state” for each axis. It turns on when an error occurred. Operation will only work when there is no error. If you want to operate a system regardless of errors, you can just inactivate the function.

(d) Address of Positioning Module

In this example, Positioning Module installed at the slot no.3 of 0 bases.

(e) Axis of command execution

You can set an axis for Parameter Setting. XGF series supports for 4 axes. In the “execution of axis” from the configuration of Parameter Setting, you can set a value for axis 1 through 4 axes.

(f) Change Step Number

Set change step number by Current Step Change. XGF series support 400 step operation data for each Axis. Therefore, the range of step number setting of Current Step Change is 1~400.

(g) For more information, reference of Current Step Change is in the “Chapter 9.5.9.”

(10) Repeat Step No. Change

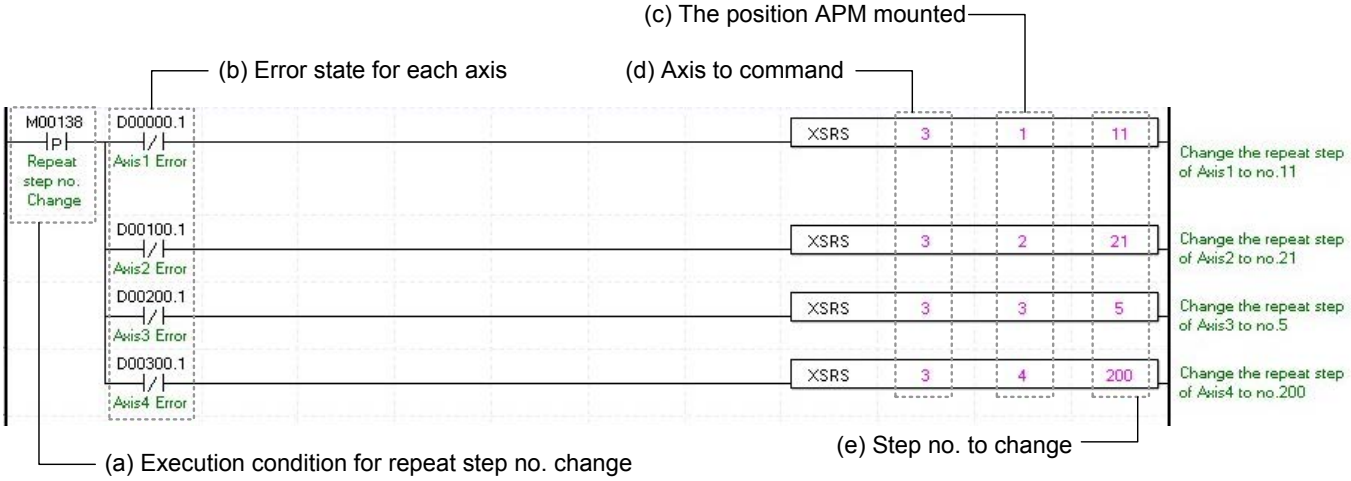

(a) Condition of Repeat Step No. Change

Condition of Repeat Step No. Change Command (XSRS). Once Repeat Step No. Change is executed, current operation step will move set step. It will execute an operation when set of Operation Method is “Repeat.”

(b) Error state for each axis

According to exercise from “Chapter 8.1.2 Current State Reading,” it is a signal of “Error state” for each axis. It turns on when an error occurred. Operation will only work when there is no error. If you want to operate a system regardless of errors, you can just inactivate the function.

(c) Address of Positioning Module

In this example, Positioning Module installed at the slot no.3 of 0 bases.

(d) Axis of command execution

You can set an axis for Parameter Setting. XGF series supports for 4 axes. In the “execution of axis” from the configuration of Parameter Setting, you can set a value for axis 1 through 4 axes.

(e) Change Step Number

Set change step number by Current Step Change. XGF series support 400 step operation data for each Axis.

Therefore, the range of step number setting of Current Step Change is 1~400.

(f) For more information, reference of Repeat Step No. Change is in the “Chapter 9.5.10.”

(11) Current Position Preset

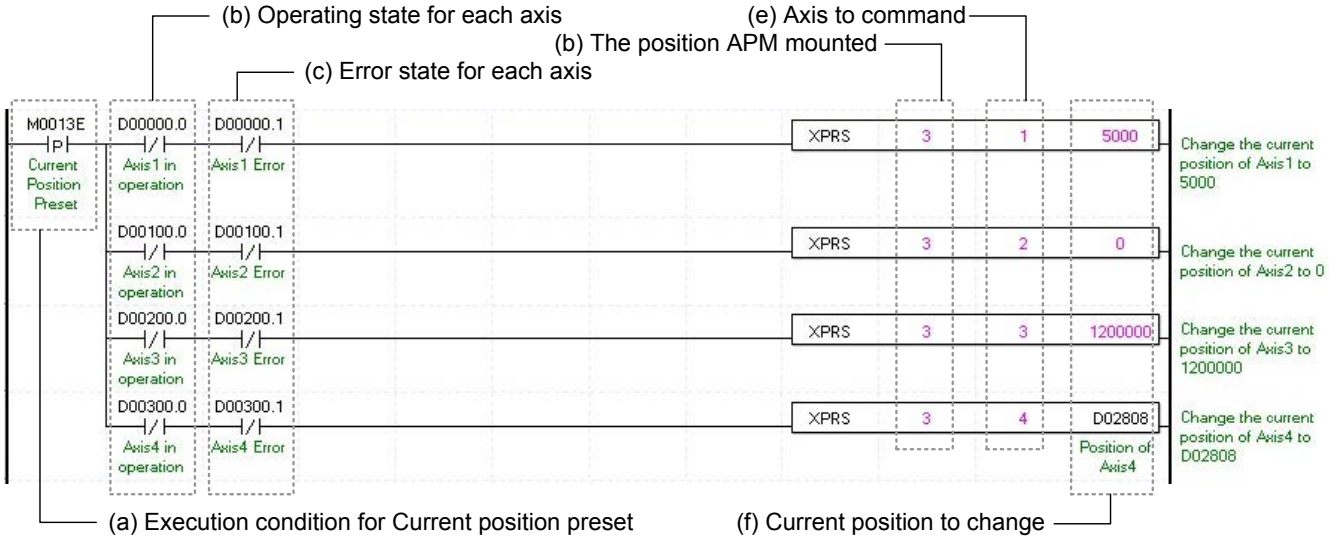

(a) Condition of Current Position Preset

Condition of Current Position Preset Command (XSNS). Once Current Position Preset is executed, current operation step will move to set step. If the origin has not set yet, the origin would be set to origin decided.

(b) Operating state by axis

According to exercise from “Chapter 8.1.2 Current State Reading,” it is a signal of “Operating” for each axis. It turns on when it is operating. Operating Data Setting can not be configured while it is running hence configuration will only be configured when it is not running. If you execute Current Position Preset while it is running, the “error 451” would be appeared.

(c) Error state for each axis

According to exercise from “Chapter 8.1.2 Current State Reading,” it is a signal of “Error state” for each axis. It turns on when an error occurred. Operation will only work when there is no error. If you want to operate a system regardless of errors, you can just inactivate the function.

(d) Address of Positioning Module

In this example, Positioning Module installed at the slot no.3 of 0 bases.

(e) Axis of command execution

You can set an axis for Parameter Setting. XGF series supports for 4 axes. In the “execution of axis” from the configuration of Parameter Setting, you can set a value for axis 1 through 4 axes.

(f) Change Current Position

Set change current position by Current Position Preset. Unit follows the value from “Unit” of basic parameter.

(g) For more information, reference of Current Position Preset is in the “Chapter 9.5.7.”

(12) Encoder Preset

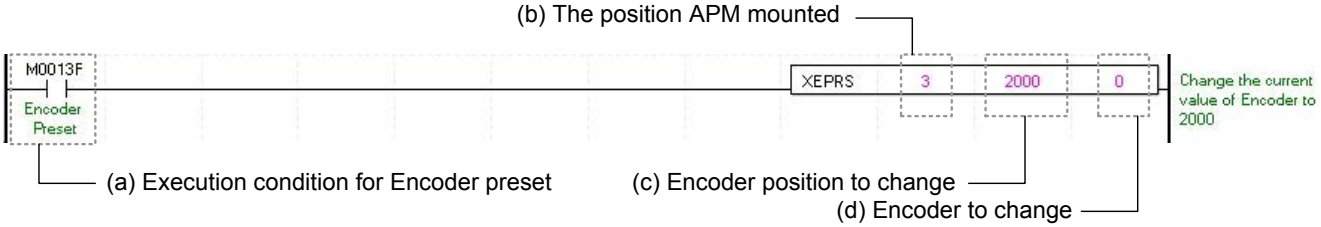

(a) Condition of Encoder Preset

Condition of Encoder Preset Command (XEPRS). Once Encoder Preset is executed, current operation step will move to set step.

(b) Address of Positioning Module

In this example, Positioning Module installed at the slot no.3 of 0 bases.

(c) Changing Encoder Position

Set for Changing Encoder Position

(d) Changing Encoder

Set Changing Encoder to execute a preset. XPM always be “0.”

(e) For more information, reference of Encoder Preset is in the “Chapter 9.5.8.”

8.1.7 Error

(1) Error Reset

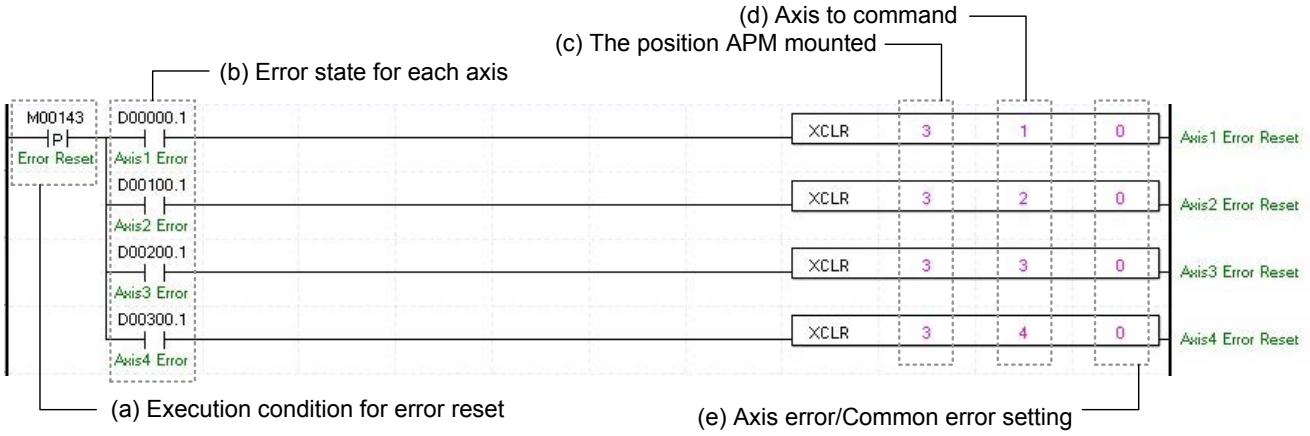

(a) Condition of Error Reset

Condition of Error Reset Command (XCLR). Once Error Reset is executed, it erases errors of module form each axis.

(b) Error state for each axis

According to exercise from “Chapter 8.1.2 Current State Reading,” it is a signal of “Error state” for each axis. It turns on when an error occurred. Operation will only work when there is no error. If you want to operate a system regardless of errors, you can just inactivate the function.

(c) Address of Positioning Module

In this example, Positioning Module installed at the slot no.3 of 0 bases.

(d) Axis of command execution

You can set an axis for Parameter Setting. XGF series supports for 4 axes. In the “execution of axis” from the configuration of Parameter Setting, you can set a value for axis 1 through 4 axes.

(e) Error setting of Error/Common by axis

Setting for type of errors. XGF series always set as “0.”

(2) Error History Reset

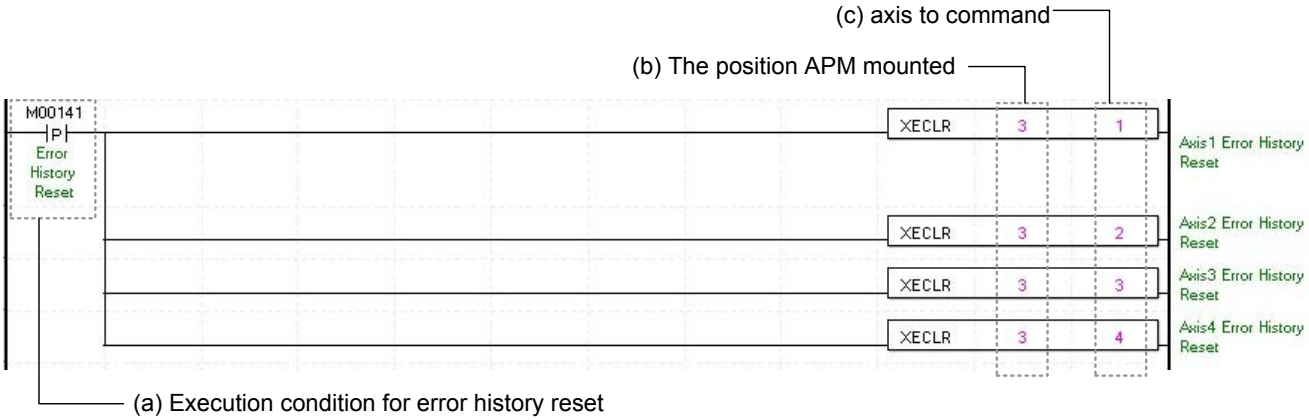

(a) Condition of Error History Reset

Condition of Error History Reset Command (XECLR). Once Error Reset is executed, it erases history of generated errors of module. XGF series has ten error histories by each axis. It will be saved to FRAM, remain still even there is no power.

(b) Address of Positioning Module

In this example, Positioning Module installed at the slot no.3 of 0 bases.

(c) Axis of command execution

You can set an axis for Parameter Setting. XGF series supports for 4 axes. In the “execution of axis” from the configuration of Parameter Setting, you can set a value for axis 1 through axis 4.

8.2 Example of XGI Programming

8.2.1 General description

Here we supposed the positioning Module is installed at the 3 slot of the 0 base. In the real usage, you need to change its value according to your actual set up.

8.2.2 Current State Read

(1) Bit Information about Operation state Reading (XPM_SRD)

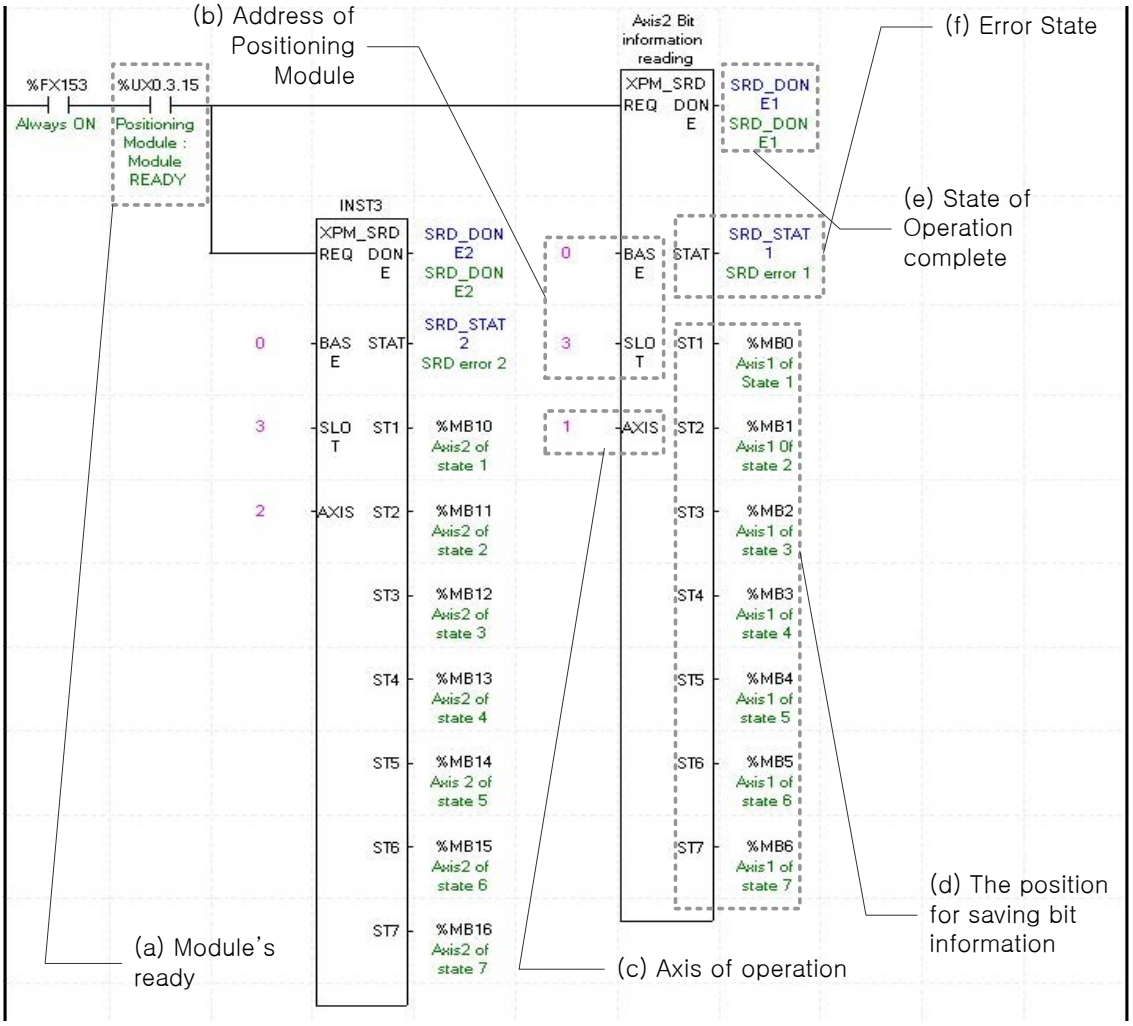

(a) Module's ready

After Turn On, if there is no error occurred in Positioning Module, it is "ON," meaning that modules are ready to operate.

(b) Address of Positioning Module

Before operation, you need to configure its position by numbers. In this example, Positioning Module is installed at the 3 slot.

(c) Axis of operation

If you command each axis, need to set Axis of command execution. XGF series can control max. 4 axes and Axis of command execution 1~4 means axis1~axis4.

(d) The position for saving bit information

Set the device to save bit state value of axis from the APM module with XPM_SRD. This device is available to be used in sequence program as a condition. For example, the current bit state in the example program above is saved in %MB0 ~ % MB6. For the detail description about the device saved, refer to “7.3.2 Current Operation State Bit Information Reading”. Bit information which saved in a device is available to be used to execute another command. For example, if you need to use In-operation-signal of axis1, just set as %MB0.0. If you need to use Error-state of axis2, just set %MB10.1.

(e) State of Operation complete

If function block is completed without error, “1” will be outputted and maintain “1” until the next operation. If error occurred, “0” will be outputted.

(f) Error State

This is the area that output error no. if there are errors in operation of function block.

(2) Current Operation Information Reading

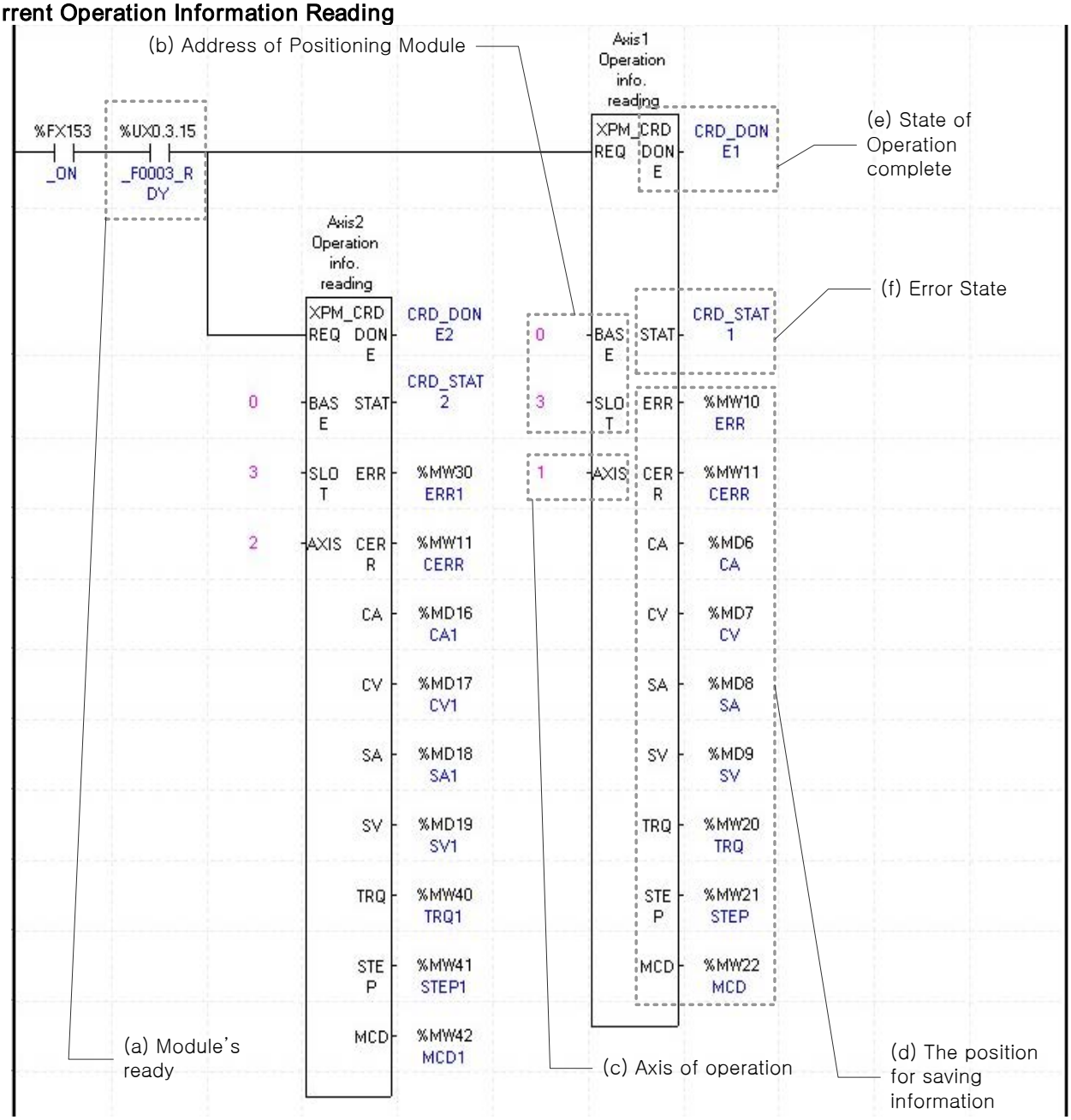

(a) Module's ready

After Turn On, if there is no error occurred in Positioning Module, it is "ON," meaning that modules are ready to operate.

(b) Address of Positioning Module

Before operation, you need to configure its position by numbers. In this example, Positioning Module is installed at the 3 slot.

(c) Axis of operation

If you command each axis, need to set Axis of command execution. XGF series can control max. 4 axes, Axis of command execution1~4 means axis1~axis4.

(d) The position for saving operation information

Set the device to save operation state value of axis from the APM module with XPM_CRD. This device is available to be used in sequence program as a monitoring value. For example, the current position value of axis1 in the example program above is saved in %MD8. For the detail description about the device saved, refer to “7.3.1 Operation Information Reading (XPM_CRD)”.

(e) State of Operation complete

If function block is completed without error, “1” will be outputted and maintain “1” until the next operation. If error occurred, “0” will be outputted.

(f) Error State

This is the area that output error no. if there are errors in operation of function block.

(3) Encoder value Reading

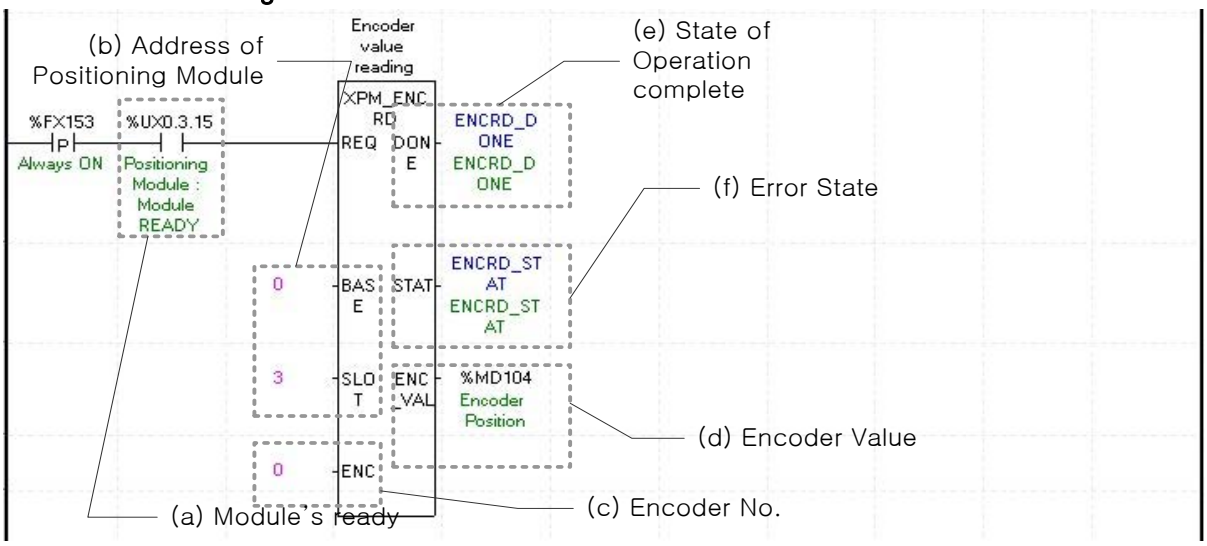

(a) Module's ready

After Turn On, if there is no error occurred in Positioning Module, it is "ON," meaning that modules are ready to operate.

(b) Address of Positioning Module

Before operation, you need to configure its position by numbers. In this example, Positioning Module is installed at the 3 slot.

(c) Encoder No.

Set the encoder no. to read encoder value. XGF series must be set as 0.

(d) Encoder value

The current value of encoder is displayed.

(e) State of Operation complete

If function block is completed without error, "1" will be outputted and maintain "1" until the next operation. If error occurred, "0" will be outputted.

(f) Error State

This is the area that output error no. if there are errors in operation of function block.

8.2.3 Operation Test

(1) Floating Origin Setting

Decide origin of current motor's position without set a machinery origin.

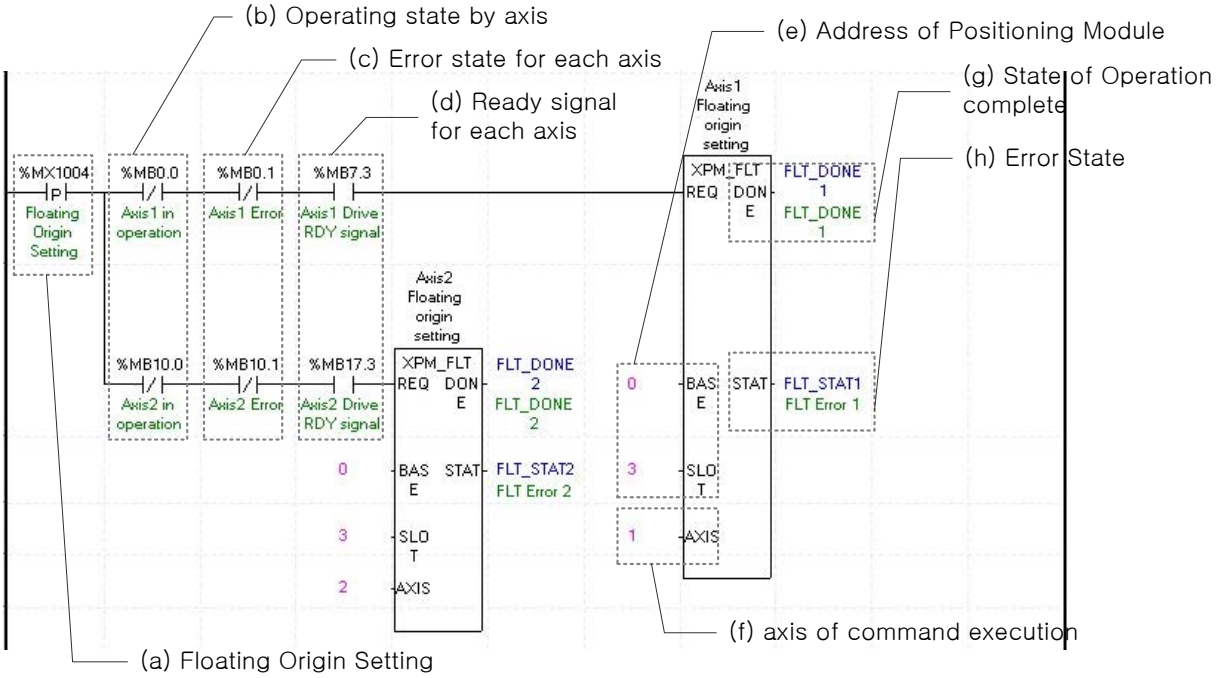

(a) This is the condition for running a Floating Origin Setting

It only works with XFLT command.

(b) Operating state by axis

According to exercise from "Chapter 8.2.2 Current State Reading," it is a signal of "Operating" for each axis.

(c) Error state for each axis

According to exercise from "Chapter 8.2.2 Current State Reading," it is a signal of "Error state" for each axis. It turns on when an error occurred. Operation will only work when there is no error. If you want to operate a system regardless of errors, you can just inactivate the function.

(d) Ready signal for each axis

According to exercise from "Chapter 8.2.2 Current State Reading," it is a signal of "Drive Ready" for each axis. This command only works when this is the condition for Floating Origin Setting is on. If it is not set as "ON," the "error 212" would be appeared.

(e) Address of Positioning Module

In this example, Positioning Module is installed at the 3 slot of 0 bases.

(f) Axis of command execution

You can set an axis for Floating Origin Setting. XGF series supports for 4 axes. In the "execution of axis" from the configuration of Floating Origin Setting, you can set a value for axis1 through axis4

(g) State of Operation complete

If function block is completed without error, “1” will be outputted and maintain “1” until the next operation. If error occurred, “0” will be outputted.

(h) Error State

This is the area that output error no. if there are errors in operation of function block.

(2) Jog Operation

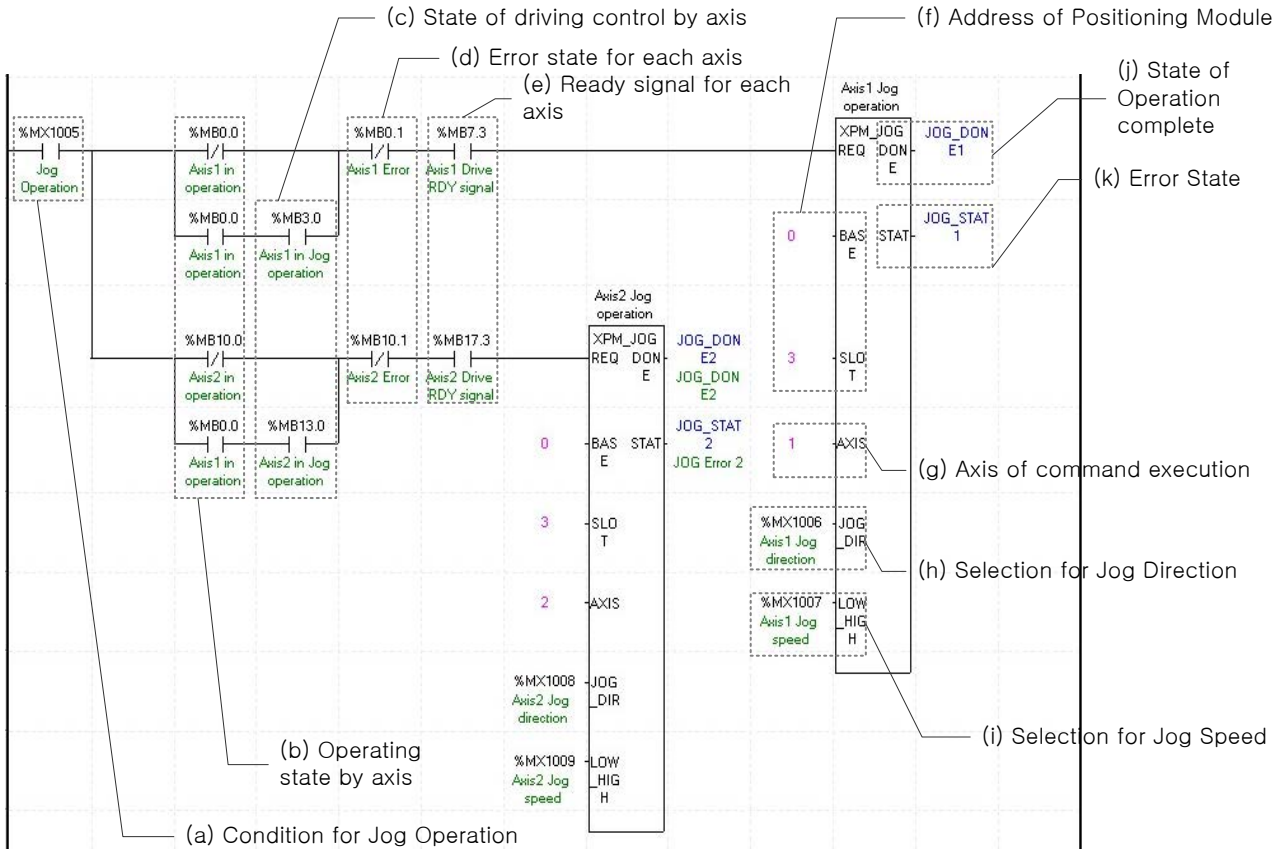

(a) This is the condition for Jog Operation

This is the condition for Jog Operation Command

(b) Operating state by axis

Jog Operation can only be working when the state of axis set as Jog Operation. In this example above, specific axis set as Jog Operation otherwise it is not operating.

(c) State of driving control by axis

According to exercise from “Chapter 8.2.2 Current State Reading,” it is a signal of “Jog Operating” for each axis. It turns on when it is operating. Jog Operation configuration can be changed while it is operating.

(d) Error state for each axis

According to exercise from “Chapter 8.2.2 Current State Reading,” it is a signal of “Error state” for each axis. It turns on when an error occurred. Operation will only work when there is no error. If you want to operate a system regardless of errors, you can just inactivate the function.

(e) Ready signal for each axis

According to exercise from “Chapter 8.1.2 Current State Reading,” it is a signal of “Drive Ready” for each axis. This command only works when this is the condition for Jog Operation is on. If it is not set as “ON,” the “error 413” would be appeared.

(f) Address of Positioning Module

APM module is attached to slot no.3 of no.0 base.

(g) Axis of command execution

Set an axis to execute Jog Operation. XGF series can control max. 4 axes. It is available to set 1 ~ 4(axis1~axis4) on “Axis of command execution” of Jog operation command.

(h) Selection for Jog Direction

Set the direction of Jog operation. If Input value is 0, it will execute Jog operation in forward direction. If Input value is 1, it will execute Jog operation in reverse direction. Direction is can be changed in operation.

(i) Selection for Jog Speed

Set the speed of Jog operation. If Input value is 0, it will execute low speed Jog operation. If Input value is 1, it will execute high speed Jog operation. Operating speed can be changed in operation.

(j) State of Operation complete

If function block is completed without error, “1” will be outputted and maintain “1” until the next operation. If error occurred, “0” will be outputted.

(k) Error State

This is the area that output error no. if there are errors in operation of function block.

(3) Inching Operation

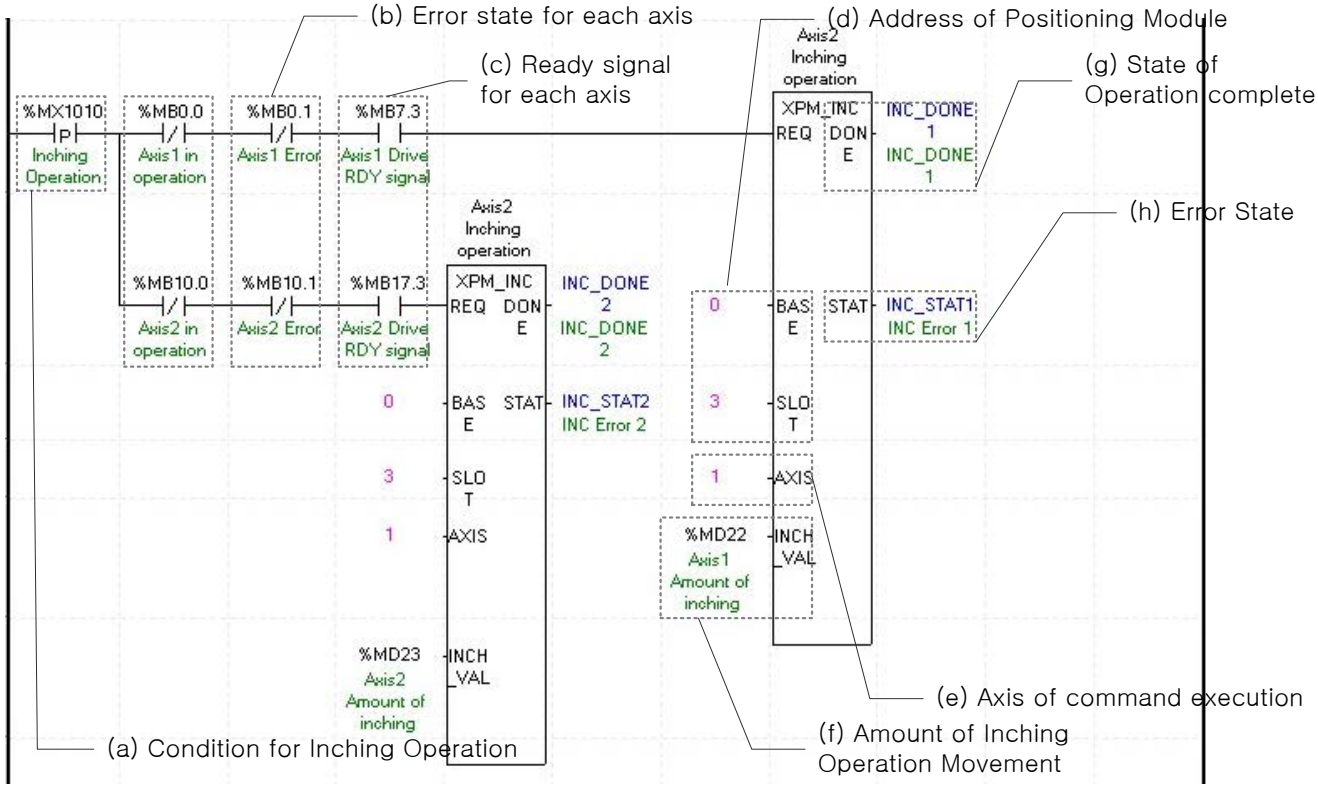

(a) This is the condition for Inching Operation

This is the condition for Inching Operation Command (XPM_INC)

(b) Error state for each axis

According to exercise from “Chapter 8.2.2 Current State Reading,” it is a signal of “Error state” for each axis. It turns on when an error occurred. Operation will only work when there is no error. If you want to operate a system regardless of errors, you can just inactivate the function.

(c) Ready signal for each axis

According to exercise from “Chapter 8.2.2 Current State Reading,” it is a signal of “Drive Ready” for each axis. This command only works when this is the condition for Inching Operation is on. If it is not set as “ON,” the “error 403” would be appeared.

(d) Address of Positioning Module

In this example, Positioning Module is installed at the 3 slot of 0 bases.

(e) Axis of command execution

You can set an axis for Inching Operation. XGF series supports for 4 axes. In the “execution of axis” from the configuration of Inching Operation, you can set a value for axis1 through axis4.

(f) Amount of Inching Operation Movement

Measure the amount of moving range by Inching Operation.

(g) complete Operating Status

If function block is completed without error, “1” will be outputted and maintain “1” until the next operation. If error occurred, “0” will be outputted.

(h) Error Status

This is the area that output error no. if there are errors in operation of function block.

(i) Reference for Inching Operation is from “Chapter 7.6.2.”

(4) Return to the position before Manual Operation

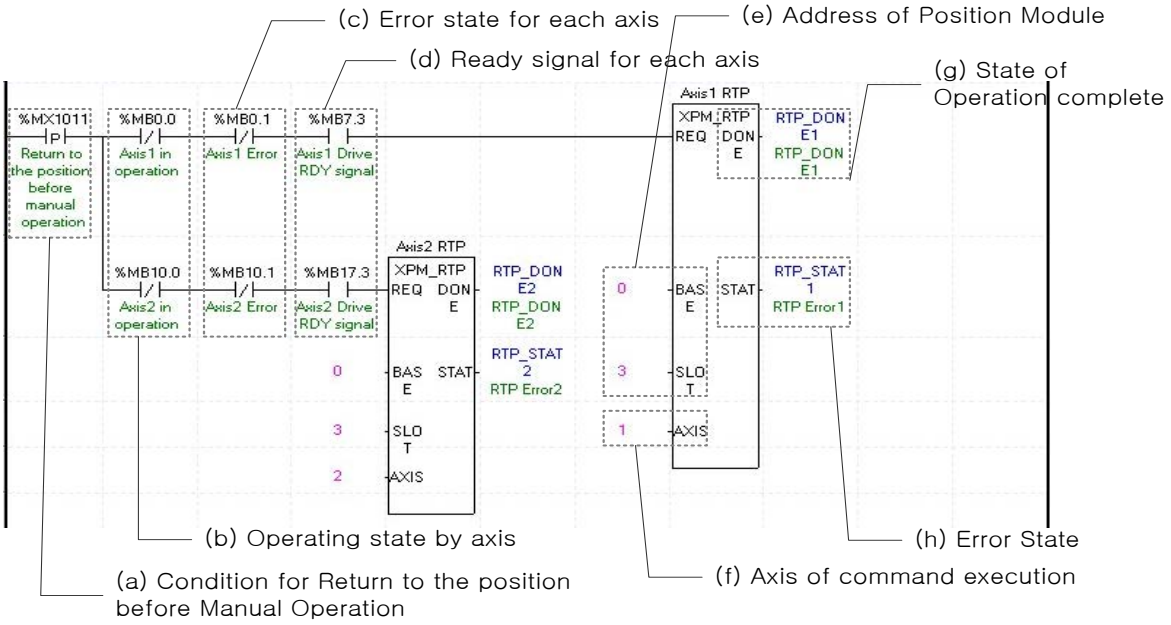

(a) This is the condition for Return to the position before Manual Operation

This is the condition for Return to the position before Manual Operation Command (XPM_RTP)

(b) Operating state by axis

According to exercise from “Chapter 8.2.2 Current State Reading,” it is a signal of “Manual Operating” for each axis. It turns on when it is operating. Inching Operation can not be configured while it is running hence configuration will only be configured when it is not running. If you execute Manual Operation while it is running, the “error 431” would be appeared.

(c) Error state for each axis

According to exercise from “Chapter 8.2.2 Current State Reading,” it is a signal of “Error state” for each axis. It turns on when an error occurred. Operation will only work when there is no error. If you want to operate a system regardless of errors, you can just inactivate the function.

(d) Ready signal for each axis

According to exercise from “Chapter 8.2.2 Current State Reading,” it is a signal of “Drive Ready” for each axis. This command only works when this is the condition for Manual Operation is on. If it is not set as “ON,” the “error 434” would be appeared.

(e) Address of Positioning Module

In this example, Positioning Module is installed at the 3 slot of 0 bases.

(f) Axis of command execution

You can set an axis for Inching Operation. XGF series supports for 4 axes. In the “execution of axis” from the configuration of Manual Operation, you can set a value for axis1 through axis4.

(g) State of Operation complete

If function block is completed without error, “1” will be outputted and maintain “1” until the next operation. If error occurred, “0” will be outputted.

(h) Error State

This is the area that output error no. if there are errors in operation of function block.

(i) When manual operation is running, the other operations are going back to its original position such as Jog Operation and Inching Operation. Reference for Manual Operation is from “Chapter 7.6.3 Return to the previous position of manual operation.”

8.2.4 Parameter and Operation Data Setting

(1) Parameter Setting

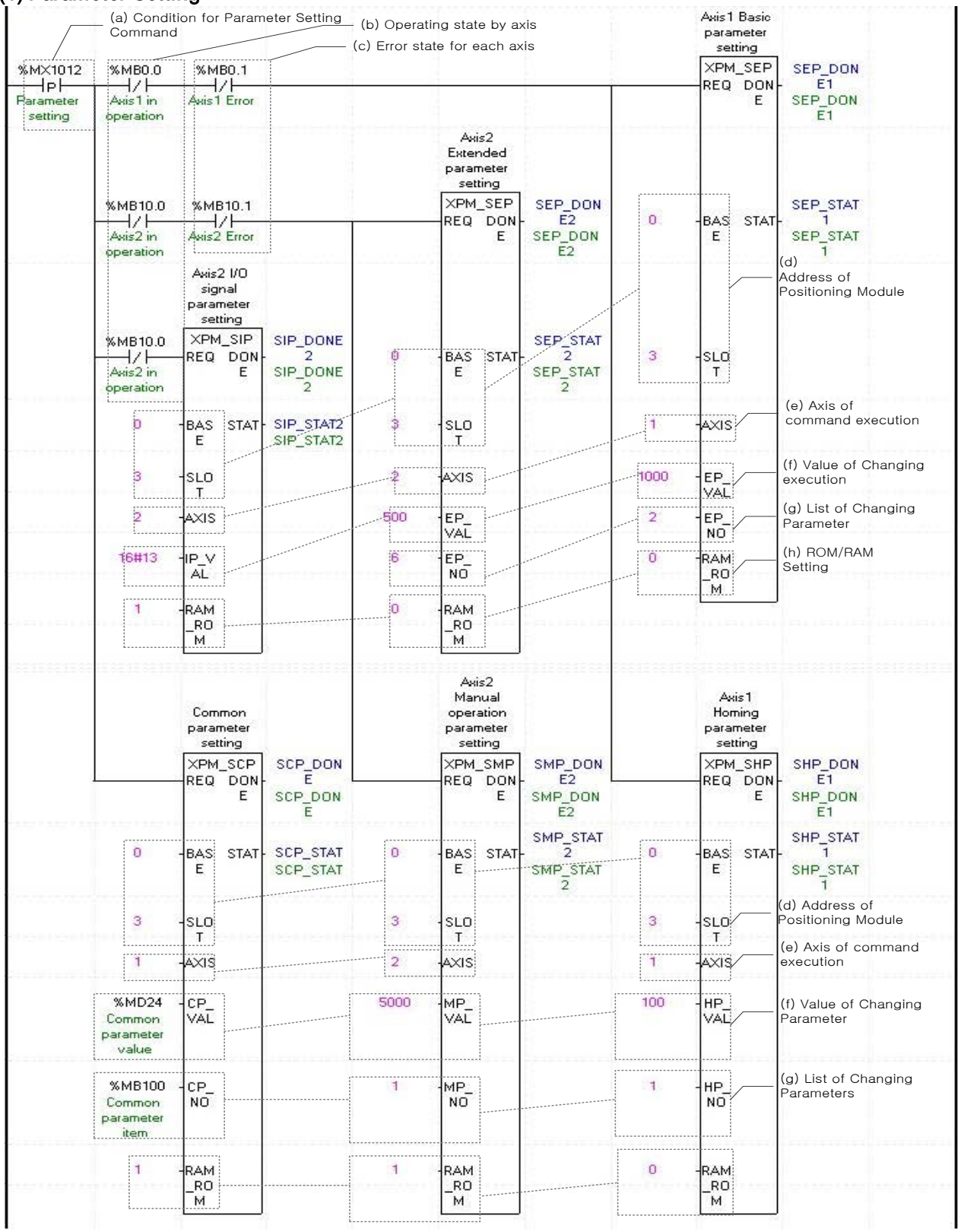

(a) This is the condition for Parameter Setting Command

This is the condition for Parameter Setting Command (XPM_SBP, XPM_SEP, XPM_SHP, XPM_SMP, XPM_SIP, XPM_SCP)

(b) Operating state by axis

According to exercise from “Chapter 8.2.2 Current State Reading,” it is a signal of “Operating” for each axis. It turns on when it is operating. Except common parameter setting, parameter setting can not be configured while it is running hence configuration will only be configured when it is not running. If you execute Parameter Setting while it is running, the “error 471” would be appeared.

(c) Error state for each axis

According to exercise from “Chapter 8.2.2 Current State Reading,” it is a signal of “Error state” for each axis. It turns on when an error occurred. Operation will only work when there is no error. If you want to operate a system regardless of errors, you can just inactivate the function.

(d) Address of Positioning Module

In this example, Positioning Module is installed at the 3 slot of 0 bases.

(e) Axis of command execution

You can set an axis for Parameter Setting. XGF series supports for 4 axes. In the “execution of axis” from the configuration of Parameter Setting, you can set a value for axis1 through axis4.

(f) Value of Changing Parameter

You can set a value of changing parameter. For more information about Parameter Value Changing look for “Chapter 6. Command.” In case of setting I/O parameter, the value would be parameter value itself.

(g) List of Changing Parameter

You need to set a list for parameter (f) changing from set command. Once operating is working, this value will change to parameter (f). For more information of list of changing parameter look for “Chapter 6. Command.” In case of setting I/O parameter, the value would be parameter value itself. Therefore changing of list would not be necessary.

(h) ROM/RAM Setting

This function sets whether you save value of changing parameter to Rom or Ram. If you choose Rom the data will be saved regardless of power and if you save in the ram the data will be vanished when powers off. This parameter sets as 1 means Rom saved, and sets as 0 means Ram saved. There is no limitation of saving parameters in the Rom since parameter of Positioning Module saved in the FRAM.

(i) Execution content of each function block is as follows.

XPM_SBP : RAM Setting Acc. Time of basic parameter of axis1 as 1000ms

XPM_SEP : RAM Setting 2 axes linear interpolation continuous operation position that circular arc is added as 500

XPM_SHP : RAM Setting position of origin of axis1 homing parameter as 100.

XPM_SMP : ROM Setting Jog speed of axis2 manual operation parameter as 5000.

XPM_SIP : ROM Setting axis2 I/O signal parameter value as 16#13(High/Low limit, Emergency/Dec. Stop signals are B contact point)

XPM_SCP : ROM Setting %MB100 of common parameter as %MD24.

(2) Operating Data Setting

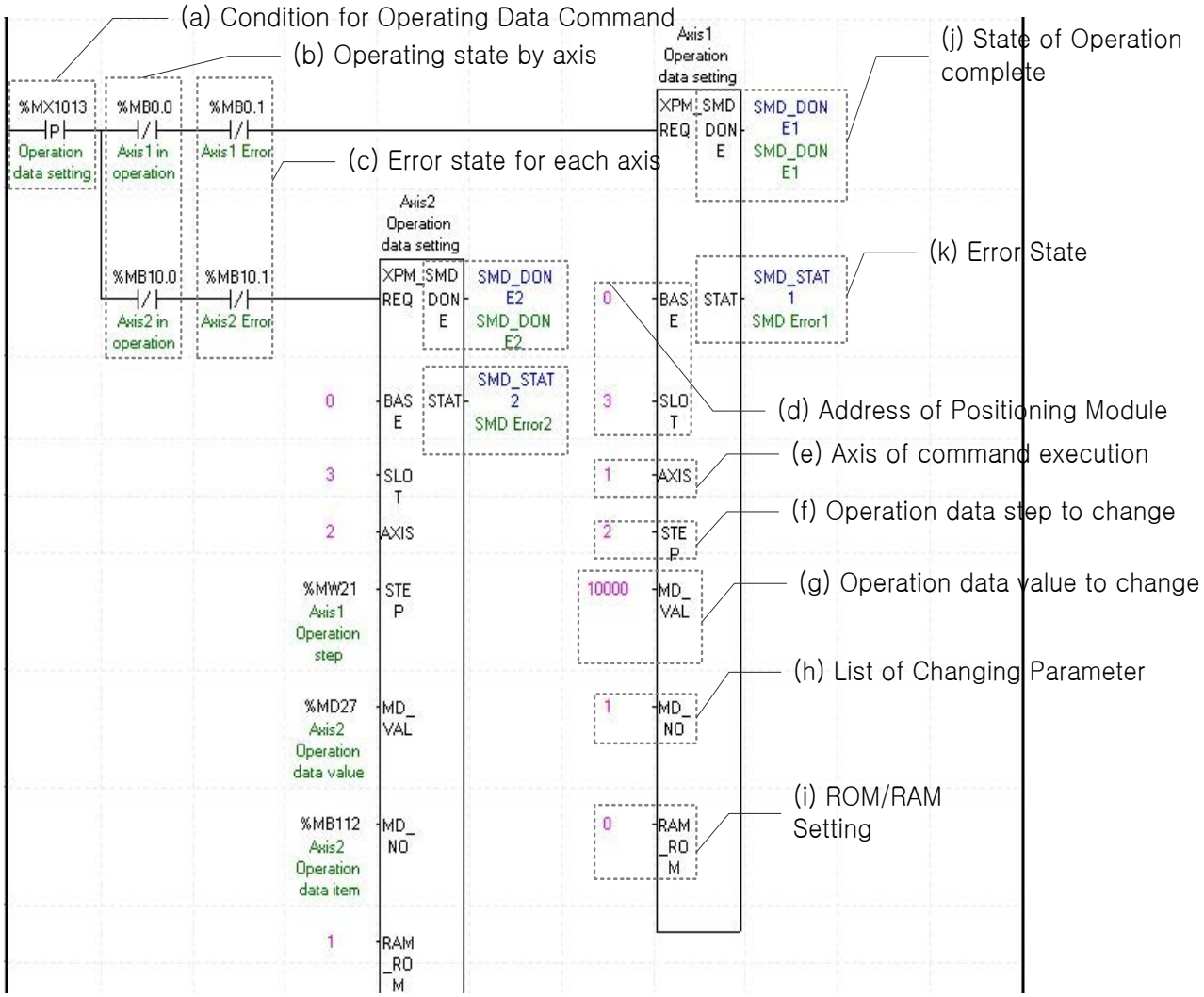

(a) This is the condition for Operating Data Setting Command

This is the condition for Operating Data Setting Command (SMD)

(b) Operating state by axis

According to exercise from “Chapter 8.2.2 Current State Reading,” it is a signal of “Operating” for each axis. It turns on when it is operating. Operating Data Setting can be configured while it is running. If you execute Operating Data Setting while it is running, it is reflected after current step operating ended.

(c) Error state for each axis

According to exercise from “Chapter 8.2.2 Current State Reading,” it is a signal of “Error state” for each axis. It turns on when an error occurred. Operation will only work when there is no error. If you want to operate a system regardless of errors, you can just inactivate the function.

(d) Address of Positioning Module

In this example, Positioning Module is installed at the 3 slot of 0 bases.

(e) Axis of command execution

You can set an axis for Parameter Setting. XGF series supports for 4 axes. In the “execution of axis” from the configuration of Parameter Setting, you can set a value for axis1 through axis4.

(f) Operation data step to change

Set the operation data step no. to change with operation data setting command. XGF series can set 400 step operation data per each axis and the data would be 0 to 400. If the data is set as “0”, it means “Current step” of operation data of corresponding axis.

(g) Operation data value to change

Set the value of operation data to change.

(h) List of Changing Parameter

You need to set a list for parameter (h) changing from set command. Once operating is working, this value will change to parameter (h). Each value of Operating Data is listed below. For example if you put 1000 for value of Changing Operating Data and 4 for Operating data then the value of Dwell is going to be set as 1000ms.

Setting value	Operation Data
1	Goal position
2	Circle interpolation support position
3	Operation speed
4	Dwell time
5	M code No.
6	Second axis setting
7	Helical interpolation axis
8	Count for circle interpolation turn
9	Coordinate
10	Control method
11	Operation method
12	Operation pattern
13	Size of circle
14	Acceleration No.
15	Deceleration No.
16	Circle interpolation method
17	Circle interpolation direction

(i) ROM/RAM Setting

This function sets whether you save value of changing parameter to Rom or Ram. If you choose Rom the data will be saved regardless of power and if you save in the ram the data will be vanished when powers off. This parameter sets as 1 means Rom saved, and sets as 0 means Ram saved. There is no limitation of saving parameters in the Rom since parameter of Positioning Module saved in the FRAM.

(j) State of Operation complete

If function block is completed without error, “1” will be outputted and maintain “1” until the next operation. If error occurred, “0” will be outputted.

(k) Error State

This is the area that output error no. if there are errors in operation of function block.

(l) Execution content of each function block is as follows.

Operation data setting for axis1 : RAM Setting the goal position on step no.2 of axis1 operation data as 10000.

Operation data setting for axis2 : ROM Setting %MB112(Operation data item of axis2) of axis2 operation data %MW41(Operation step of axis2) step as %MD27(Operation data value of axis2).

(3) Operation Data Teaching Array

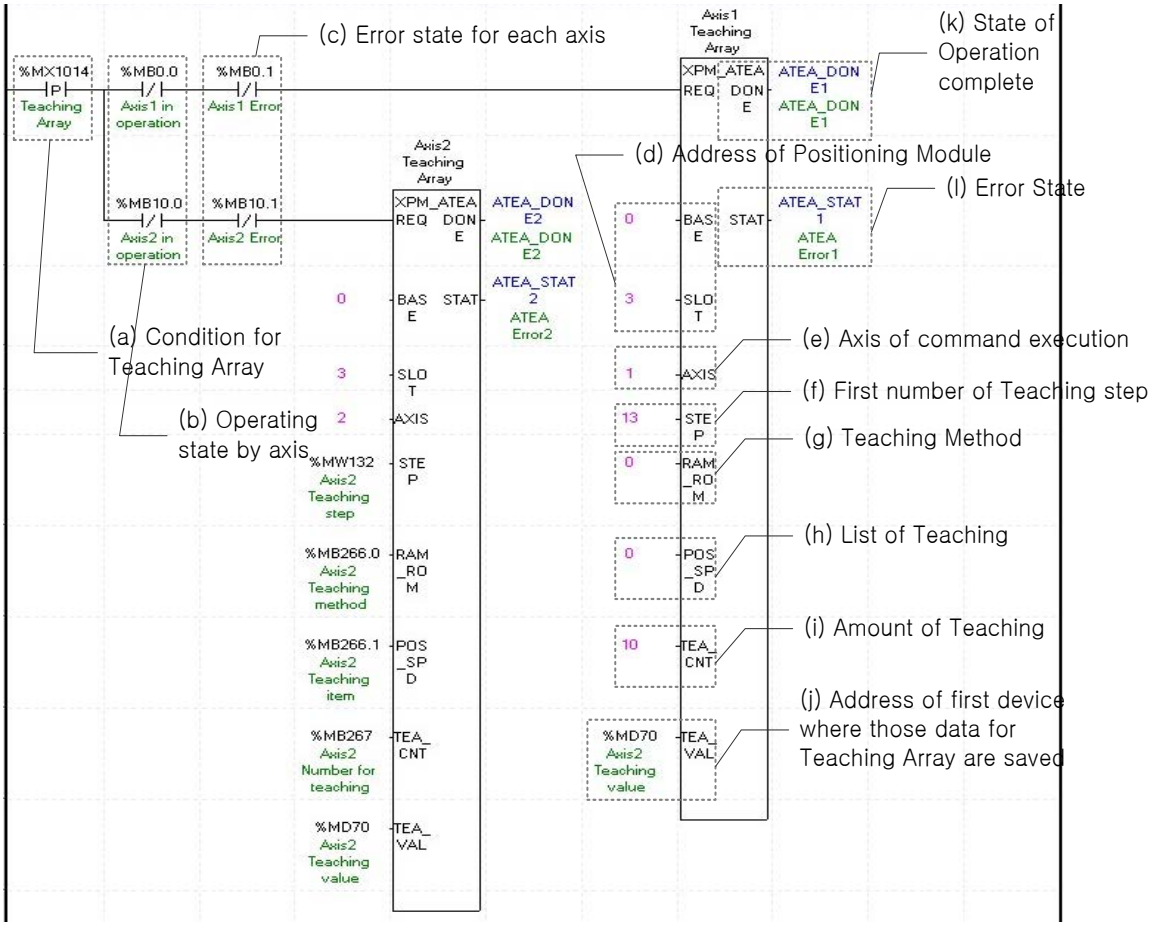

(a) This is the condition for Teaching Array

Condition Teaching Array Command (XPM_ATEA)

(b) Operating state by axis

According to exercise from “Chapter 8.2.2 Current State Reading,” it is a signal of “Operating” for each axis. It turns on when it is operating. If you execute Teaching Array while it is running, the step data will be change instantly. But the step data in operation will be change after the end of current step operation.

(c) Error state for each axis

According to exercise from “Chapter 8.2.2 Current State Reading,” it is a signal of “Error state” for each axis. It turns on when an error occurred. Operation will only work when there is no error. If you want to operate a system regardless of errors, you can just inactivate the function.

(d) Address of Positioning Module

In this example, Positioning Module is installed at the 3 slot of 0 bases.

(e) Axis of command execution

You can set an axis for Parameter Setting. XGF series supports for 4 axes. In the “execution of axis” from the configuration of Parameter Setting, you can set a value for axis1 through axis4.

(f) First number of Teaching Step

You can setup the first number of Teaching Step among the Operating Data step. In this example above, Teaching Array of axis1 will be operate from 22th step, which is 10th step away from 13th step, hence it will be operate between 13th step and 22th step.

(g) Teaching Method

This function sets whether you save value of changed Teaching data to Rom or Ram. If you choose Rom the data will be saved regardless of power and if you save in the ram the data will be vanished when powers off. This parameter sets as 1 means Rom saved, and sets as 0 means Ram saved. There is no limitation of saving parameters in the Rom since parameter of Positioning Module saved in the FRAM.

(h) List of Teaching

You can set a data with Teaching Method among the Operating Data. Both “Goal Position” and “Operating Speed” can be changed by Teaching Array. When its value set “0” means set a Goal Position and “1” means set an Operating Speed.

(i) Amount of Teaching

Decide how many steps will be operated using by Teaching Method. Maximum 16 Teaching Array data can be used. For more information about Teaching Array Operation, look for reference from “Chapter 7.4.8”

(j) Address of first device where those data for Teaching Array are saved

To execute a Teaching Array, you need to set a specific value first. TWR commands are using for set up those Teaching Array data. It has to be done before actual Teaching Array operation. Teaching Data will be set up depends on number of first device as below table.

Value	Device No.	Teaching Array Data
1	Device + 0	Teaching Array Data 1
2	Device + 1	Teaching Array Data 2
3	Device + 2	Teaching Array Data 3
4	Device + 3	Teaching Array Data 4
5	Device + 4	Teaching Array Data 5
6	Device + 5	Teaching Array Data 6
7	Device + 6	Teaching Array Data 7
8	Device + 7	Teaching Array Data 8
9	Device + 8	Teaching Array Data 9
10	Device + 9	Teaching Array Data 10
11	Device + 10	Teaching Array Data 11
12	Device + 11	Teaching Array Data 12
13	Device + 12	Teaching Array Data 13
14	Device + 13	Teaching Array Data 14
15	Device + 14	Teaching Array Data 15
16	Device + 15	Teaching Array Data 16

(k)State of Operation complete

If function block is completed without error, “1” will be outputted and maintain “1” until the next operation. If error occurred, “0” will be outputted.

(l) Error State

This is the area that output error no. if there are errors in operation of function block.

(m) Execution content of each function block is as follows.

Axis1 Teaching Array : Execute RAM Teaching the position value of 10 steps from no.13 to no.22 of axis1 as the value saved in %MD50 ~ %MD59.

Axis2 Teaching Array : Teaching the items of 2axis(from %MW132~%MB2666.1) as the value saved in that from %MD70 to MB267 by %MB266.0

(4) Saving Current Data

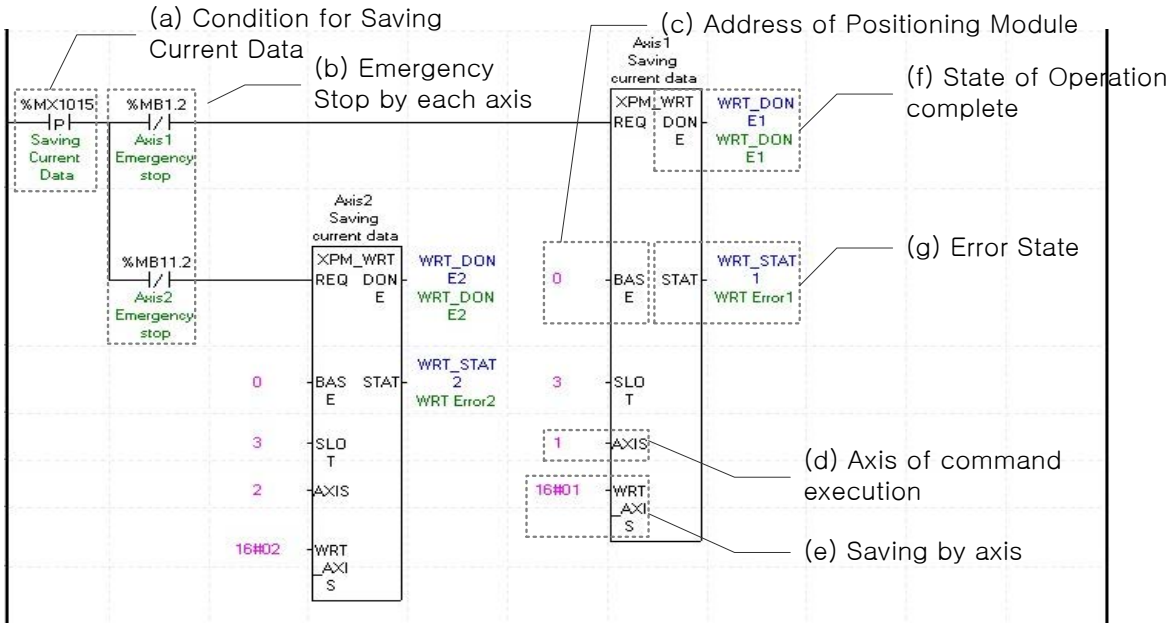

(a) This is the condition for Saving Current Data

This is the condition for Saving Current Data Command (XPM_WRT). When current saving data operated, those values of module parameter and operating data would be saved in FRAM. Therefore configuration of Ram or Ram Teaching would be constantly saved whether power is on or not.

(b) Emergency Stop by each axis

According to exercise from “Chapter 8.2.2 Current State Reading,” it is a signal of “State of Emergency Stop” for each axis. It turns on when it is Emergency Stop. Emergency Stop can not be configured while it is running hence configuration will only be configured when it is not running.

(c) Address of Positioning Module

In this example, Positioning Module is installed at the 3 slot of 0 bases.

(d) Axis of command execution

You can set an axis for Parameter Setting. XGF series supports for 4 axes. In the “execution of axis” from the configuration of Parameter Setting, you can set a value for axis1 through axis4.

(e) Saving by axis

Configure current data operation setting. Choosing axis are configured follow by below table. Therefore even if those axis are not operated as it programmed, saving axis can be saved in Array. The data of operated axis saved in FRAM, which make constantly stable whether its power is on or not.

15 ~ 4 Bit	3Bit	2Bit	1Bit	0Bit
N/A	axis 4	axis 3	axis 2	axis1

(f) State of Operation complete

If function block is completed without error, “1” will be outputted and maintain “1” until the next operation. If error occurred, “0” will be outputted.

(g) Error State

This is the area that output error no. if there are errors in operation of function block.

8.2.5 Positioning Operation

(1) Homing

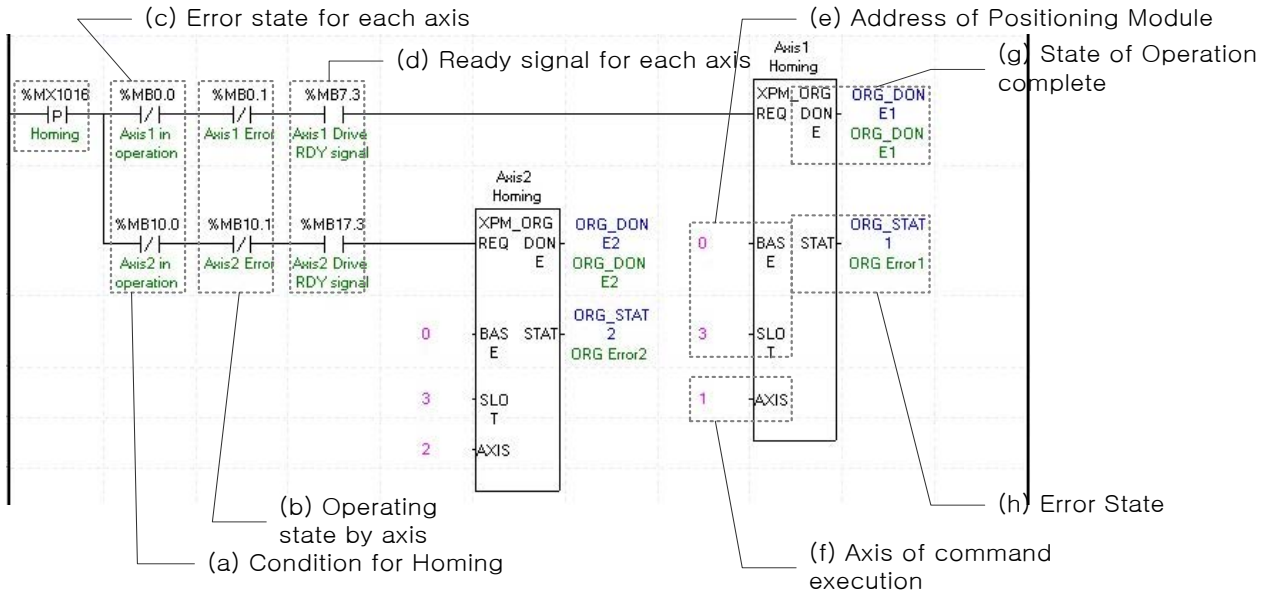

(a) This is the condition for Homing

This is the condition for Homing Command (SPM_ORG)

(b) Operating state by axis

According to exercise from “Chapter 8.2.2 Current State Reading,” it is a signal of “Operating” for each axis. It turns on when it is operating. Homing command can not be configured while it is running hence configuration will only be configured when it is not running. If you execute Homing while it is running, the “error 201” would be appeared.

(c) Error state for each axis

According to exercise from “Chapter 8.2.2 Current State Reading,” it is a signal of “Error state” for each axis. It turns on when an error occurred. Operation will only work when there is no error. If you want to operate a system regardless of errors, you can just inactivate the function.

(d) Ready signal for each axis

According to exercise from “Chapter 8.2.2 Current State Reading,” it is a signal of “Drive Ready” for each axis. This command only works when this is the condition for Drive Ready is on. If it is not set as “ON,” the “error 203” would be appeared.

(e) Address of Positioning Module

In this example, Positioning Module is installed at the 3 slot of 0 bases.

(f) Axis of command execution

You can set an axis for Inching Operation. XGF series supports for 4 axes. In the “execution of axis” from the configuration of Manual Operation, you can set a value for axis1 through axis4.

(g) State of Operation complete

If function block is completed without error, “1” will be outputted and maintain “1” until the next operation. If error occurred, “0” will be outputted.

(h) Error State

This is the area that output error no. if there are errors in operation of function block.

(i) For more information, reference for Homing is in the “Chapter 9.1.”

(2) Direct Start

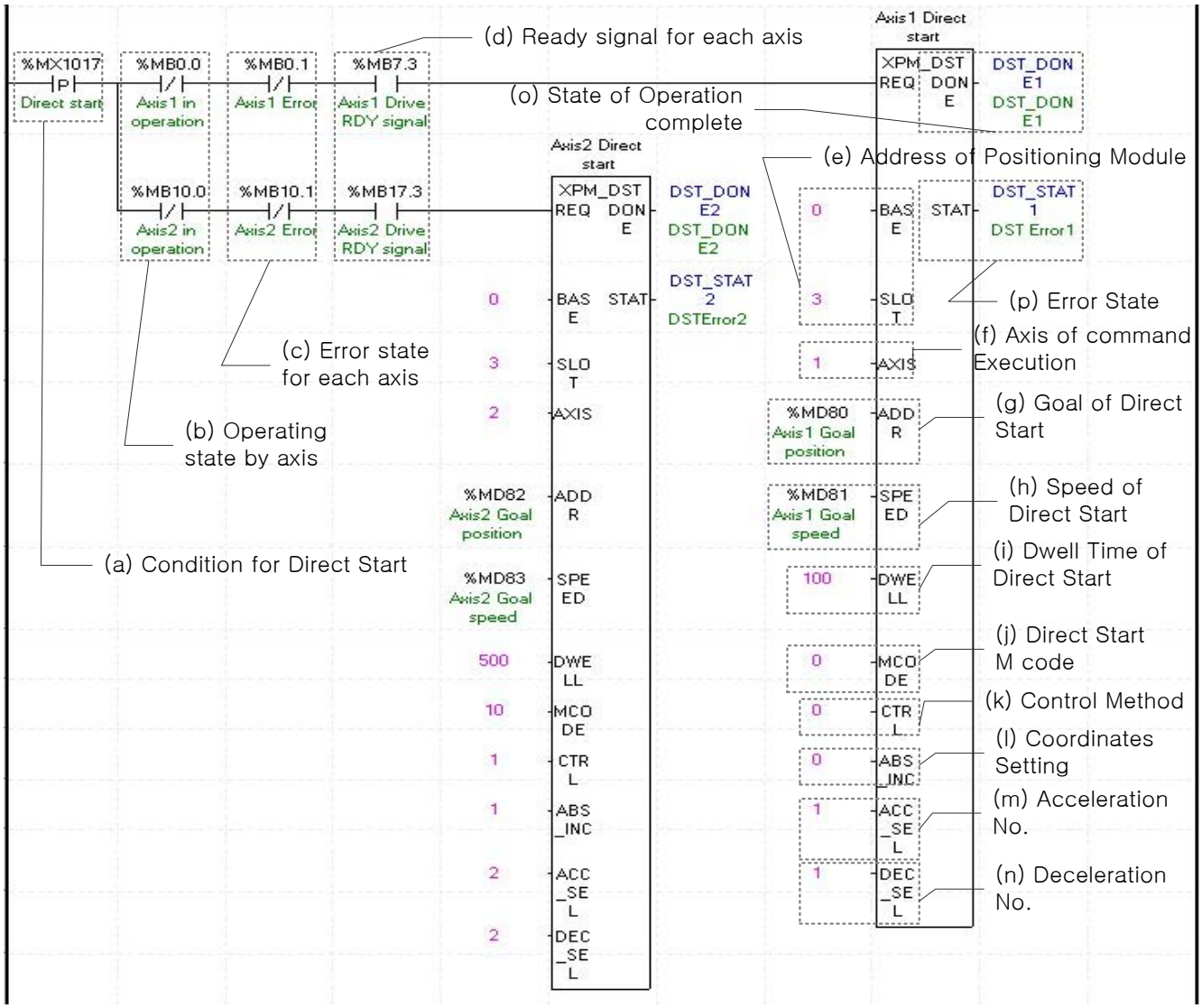

(a) This is the condition for Direct Start

This is the condition for Direct Start Command (XPM_DST)

(b) Operating state by axis

According to exercise from “Chapter 8.2.2 Current State Reading,” it is a signal of “Operating” for each axis. It turns on when it is operating. Direct Start command can not be configured while it is running hence configuration will only be configured when it is not running. If you execute Direct Start while it is running, the “error 221” would be appeared.

(c) Error state for each axis

According to exercise from “Chapter 8.2.2 Current State Reading,” it is a signal of “Error state” for each axis. It turns on when an error occurred. Operation will only work when there is no error. If you want to operate a system regardless of errors, you can just inactivate the function.

(d) Ready signal for each axis

According to exercise from “Chapter 8.2.2 Current State Reading,” it is a signal of “Drive Ready” for each axis. This command only works when this is the condition for Drive Ready is on. If it is not set as “ON,” the “error 225” would be appeared.

(e) Address of Positioning Module

In this example, Positioning Module is installed at the 3 slot of 0 bases.

(f) Axis of command execution

You can set an axis for Inching Operation. XGF series supports for 4 axes. In the “execution of axis” from the configuration of Manual Operation, you can set a value for axis1 through axis4.

(g) Goal of Direct Start

Decide changing position of Direct Start command. In this example above, the initialized value is “device,” but you can also change it with “real numbers,” which data type is “DINT.”

(H) Speed of Direct Start

Decide goal speed of Direct Start. In this example above, the initialized value is “device,” but you can also change it with “real numbers,” which data type is “UDINT.”

(i) Dwell Time of Direct Start

Dwell Time consider as a total amount of time from beginning of Direct Start operation that reach to the goal position and make output of Positioning Done Signal. That means after done its operation, direct Start will make a Positioning done signal. Its unit is “ms,” and type is “UINT”

(j) Direct Start M code

You can set a value of M code which are displaying of Operating Parameter by Direct Start. The way of M code outputs are “Parameter Expansion, M code Mode,” within the “None, With, After.” It will make an M code besides you choose “None” for its parameter. For more information, reference for M code is in the “Chapter 4.2.2”

(k) Control method

Set direct start. Follows are executed depending on setting value.

0 : Position control

1 : Speed control

2 : Feed control

(l) Coordinates setting

Set the operating coordinates of direct start. Followings are executed depending on setting value.

0 : Absolute coordinates

1 : Relative coordinates

(m) Acceleration No.

Set the acc. No. used in positioning control. It operates by corresponding acc. Time of basic parameter depending on setting value.

0 : Acc. Time 1

1 : Acc. Time 2

2 : Acc. Time 3

3 : Acc. Time 4

(n) Deceleration No.

Set the dec. No. used in positioning control. It operates by corresponding dec. Time of basic parameter depending on setting value.

0 : Dec. Time 1

1 : Dec. Time 2

2 : Dec. Time 3

3 : Dec. Time 4

(o) State of Operation complete

If function block is completed without error, “1” will be outputted and maintain “1” until the next operation. If error occurred, “0” will be outputted.

(p) Error State

This is the area that output error no. if there are errors in operation of function block.

(q) The function block used in the example is as follows.

Axis1 Direct Start : Execute position control with Axis1 Goal Position %MD80(axis1 Goal position), Goal Speed %MD81(axis Goal Speed), Dwell time 100ms, M code 0, Absolute coordinates, Acc. Time1, Dec Time 1

Axis2 Direct Start : Execute position control with Axis1 Goal Position %MD82(axis2 Goal position), Goal Speed %MD83(axis2 Goal Speed), Dwell time 500ms, M code 0, Absolute coordinates, Acc. Time 2, Dec Time 2

(3) Indirect Start

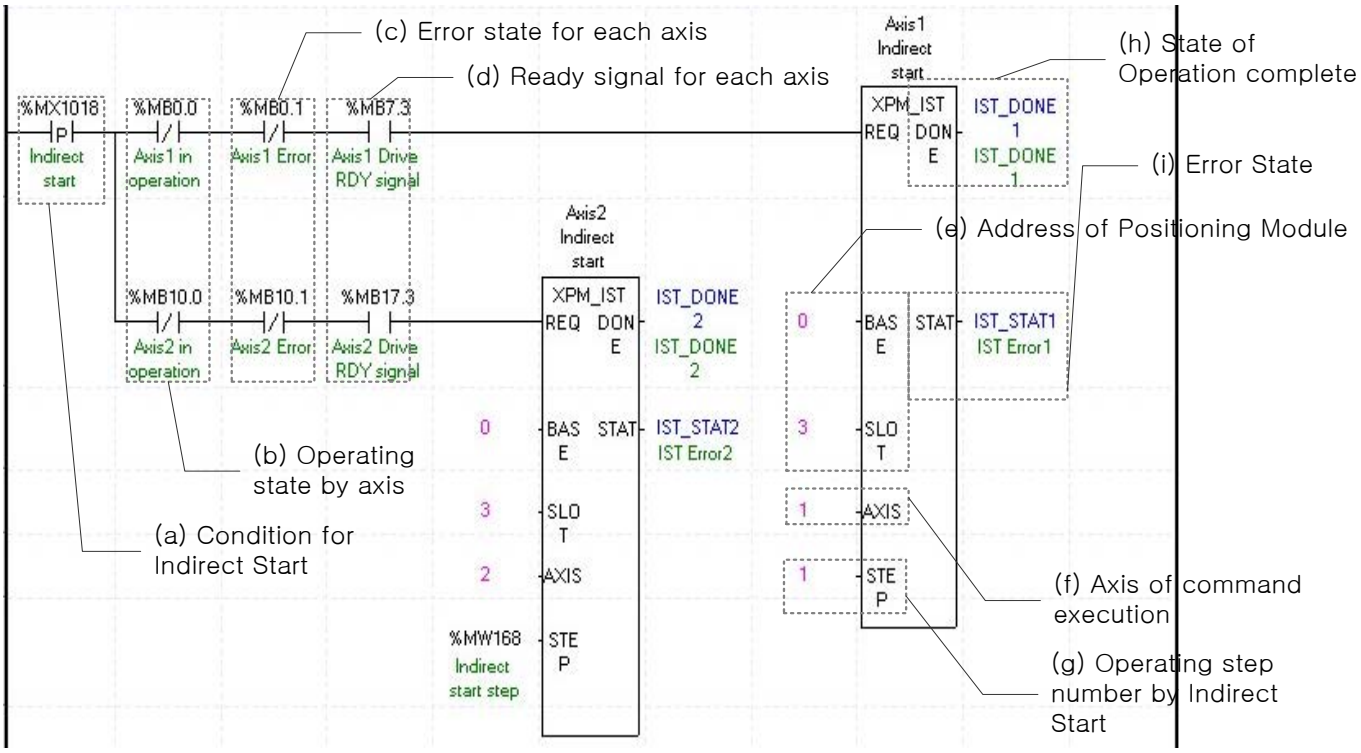

(a) This is the condition for Indirect Start

This is the condition for Indirect Start Command (XPM_IST)

(b) Operating state by axis

According to exercise from “Chapter 8.2.2 Current State Reading,” it is a signal of “Operating” for each axis. It turns on when it is operating. Operating Data Setting can not be configured while it is running hence configuration will only be configured when it is not running. If you execute Indirect Start while it is running, the “error 231” would be appeared.

(c) Error state for each axis

According to exercise from “Chapter 8.2.2 Current State Reading,” it is a signal of “Error state” for each axis. It turns on when an error occurred. Operation will only work when there is no error. If you want to operate a system regardless of errors, you can just inactivate the function.

(d) Ready signal for each axis

According to exercise from “Chapter 8.2.2 Current State Reading,” it is a signal of “Drive Ready” for each axis. This command only works when this is the condition for Drive Ready is on. If it is not set as “ON,” the “error 235” would be appeared.

(e) Address of Positioning Module

In this example, Positioning Module is installed at the 3 slot of 0 bases.

(f) Axis of command execution

You can set an axis for Parameter Setting. XGF series supports for 4 axes. In the “execution of axis” from the configuration of Parameter Setting, you can set a value for axis1 through axis4.

(g) Operating step number by Indirect Start

Set the operating step number by indirect start for main Axis of command execution.

(h) State of Operation complete

If function block is completed without error, “1” will be outputted and maintain “1” until the next operation. If error occurred, “0” will be outputted.

(i) Error State

This is the area that output error no. if there are errors in operation of function block.

(j) Indirect start operates by appointing step of position data for each axis. Therefore it could run those commands of Positioning control, Speed control, Feed control, Linear circular interpolation depends on setting of positioning data. For more information, reference for Setting of Operating Data is in the “Chapter4.7.”

(k) The operation of function block is as follows.

Axis1 Indirect Start : Execute step no.1 of axis1 by indirect start

Axis2 Indirect Start : Execute %MW168(Indirect start step) of axis2 by indirect start

(4) Ellipse Interpolation

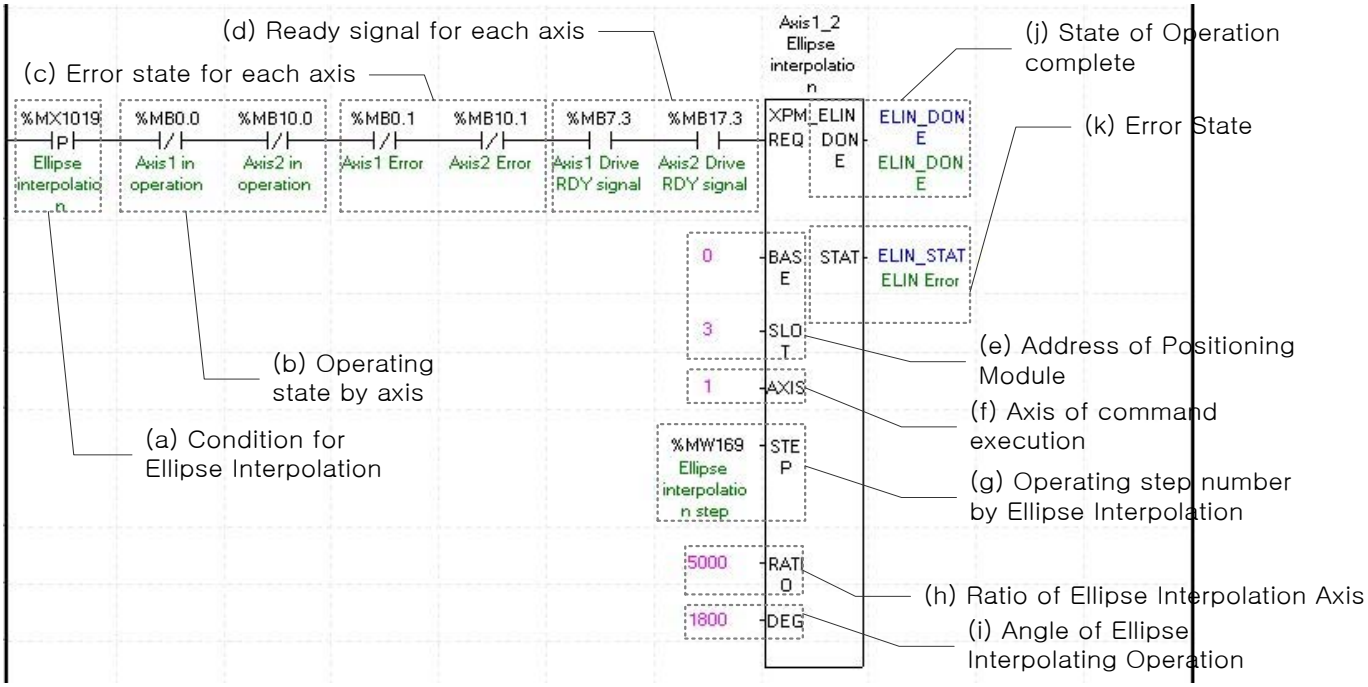

(a) This is the condition for Ellipse Interpolation

This is the condition for Ellipse Interpolation Command (XELIN)

(b) Operating state by axis

According to exercise from “Chapter 8.1.2 Current State Reading,” it is a signal of “Operating” for each axis. It turns on when it is operating. Operating Data Setting can not be configured while it is running hence configuration will only be configured when it is not running. If you execute Ellipse Interpolation while it is running, the “error 541” would be appeared.

(c) Error state for each axis

According to exercise from “Chapter 8.1.2 Current State Reading,” it is a signal of “Error state” for each axis. It turns on when an error occurred. Operation will only work when there is no error. If you want to operate a system regardless of errors, you can just inactivate the function.

(d) Ready signal for each axis

According to exercise from “Chapter 8.1.2 Current State Reading,” it is a signal of “Drive Ready” for each axis. This command only works when this is the condition for Drive Ready is on. If a Drive Ready of main axis is not set as “ON,” the “error 549” would be appeared and If a Drive Ready of subordinate axis is not set as “ON,” the “error 550” would be appeared and

(e) Address of Positioning Module

In this example, Positioning Module is installed at the 3 slot of 0 bases.

(f) Axis of command execution

You can set an axis for Parameter Setting. XGF series supports for 4 axes. In the “execution of axis” from the configuration of Parameter Setting, you can set a value for axis1 through axis4.

(g) Operating step number by Ellipse Interpolation

Set the operating step number by Ellipse Interpolation. The setting of main operating step and subordinate step is the same.

(h) Ratio of Ellipse Interpolation Axis

Set both ratio values for main and subordinate axis of set operates data from circular interpolation locus. It is to change circular locus into ellipse locus by using ratio of main and subordinate axis.

(i) Angle of Ellipse Interpolating Operation

Set the degree for Ellipse Interpolating Operation. Unit is [$X10^{-1}$ degree]. For more information, reference for Ellipse Interpolation is in the “Chapter9.213.”

(j) State of Operation complete

If function block is completed without error, “1” will be outputted and maintain “1” until the next operation. If error occurred, “0” will be outputted.

(k) Error State

This is the area that output error no. if there are errors in operation of function block.

(l) The function block used in the example is as follows.

Axis1_2 Ellipse interpolation: Execute ellipse interpolation of 180°, ratio of between axis as 50% with operation data of %MW169(Ellipse interpolation step)step.

(5) Synchronous Start

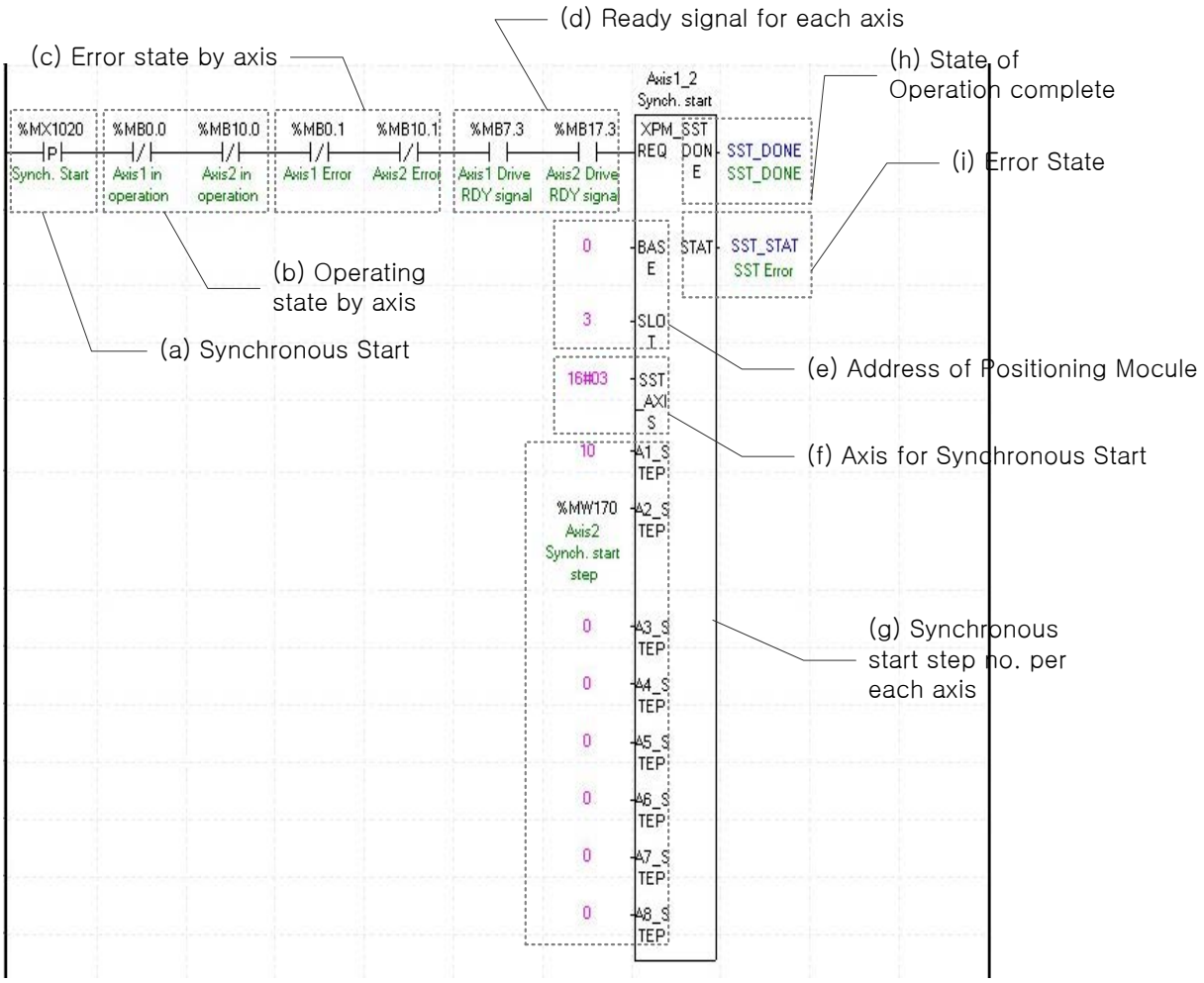

(a) This is the condition for Synchronous Start

This is the condition for Synchronous Start Command

(b) Operating state by axis

According to exercise from “Chapter 8.2.2 Current State Reading,” it is a signal of “Operating” for each axis. It turns on when it is operating. Operating Data Setting can not be configured while it is running hence configuration will only be configured when it is not running. If you execute Axis1 Synchronous Start while it is running, the “error 291” would be appeared.

(c) Error state by axis

According to exercise from “Chapter 8.2.2 Current State Reading,” it is a signal of “Error state” for each axis. It turns on when an error occurred. Operation will only work when there is no error. If you want to operate a system regardless of errors, you can just inactivate the function.

(d) Ready signal for each axis

According to exercise from “Chapter 8.2.2 Current State Reading,” it is a signal of “Drive Ready” for each axis. This command only works when this is the condition for Drive Ready is on. If it is not set as “ON,” the “error 295” would be appeared.

(e) Address of Positioning Module

In this example, Positioning Module is installed at the 3 slot of 0 bases.

(f) Axis for Synchronous Start

Set axis for Synchronous Start. The axis for Synchronous Start uses a “bit” from WORD Data setting as a “1” for each axis. Axis for each bits are as below.

15~4 Bit	3Bit	2Bit	1Bit	0Bit
N/A	Axis 4	Axis 3	Axis 2	Axis1

(g) Synchronous start step no. per each axis

Set the step no. of each axis for synchronous start. XGF series can control 4 axes, it doesn’t use A4_STEP ~ A8_STEP input.

(h) State of Operation complete

If function block is completed without error, “1” will be outputted and maintain “1” until the next operation. If error occurred, “0” will be outputted.

(i) Error State

This is the area that output error no. if there are errors in operation of function block.

(j) The function block used in the example is as follows.

Axis1_2 Synchronous start : Execute no.10 operation step of axis1 and step of %MW170(axis2 synchronous start step) synchronously.

.

(6) Point Operation

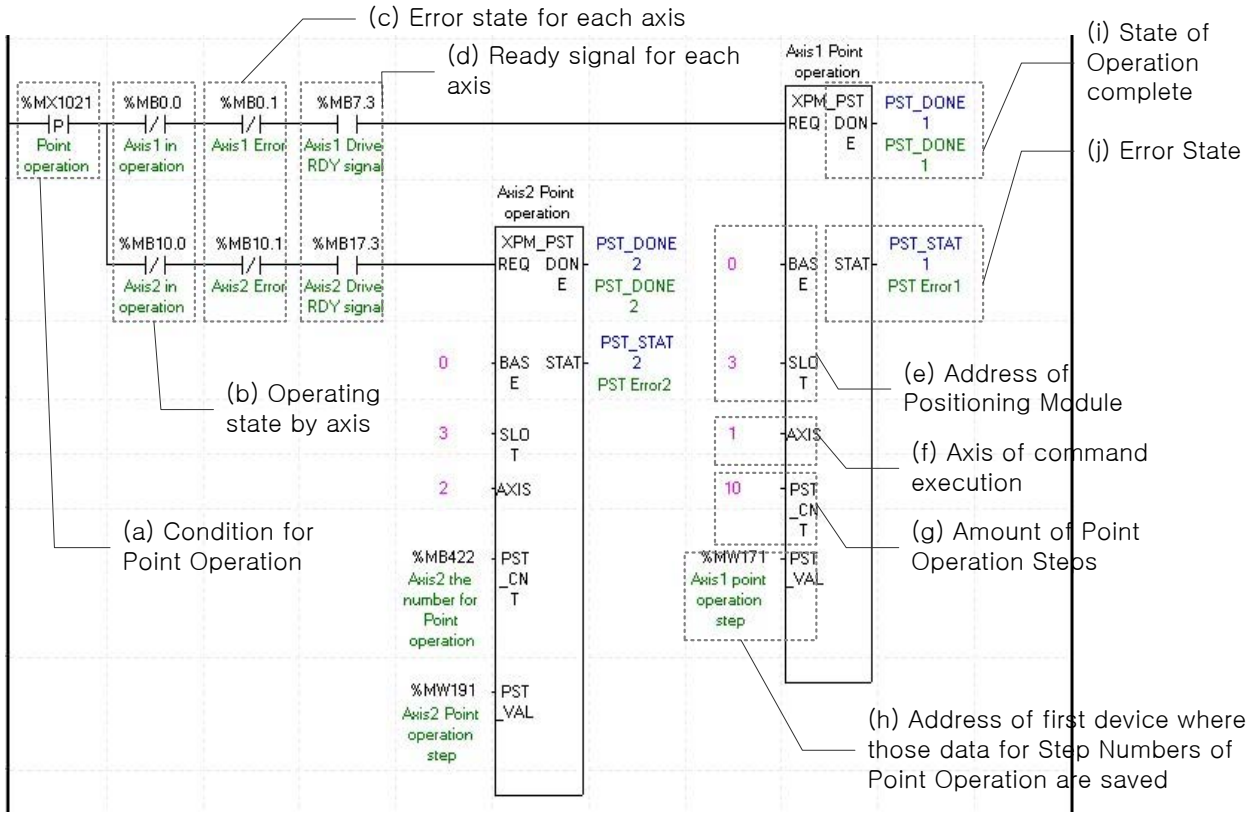

(a) This is the condition for Point Operation

This is the condition for Point Operation Command (XPM_PST).

(b) Operating state by axis

According to exercise from “Chapter 8.2.2 Current State Reading,” it is a signal of “Operating” for each axis. It turns on when it is operating. Operating Data Setting can not be configured while it is running hence configuration will only be configured when it is not running. If you execute Point Operation while it is running, the “error 231” would be appeared.

(c) Error state for each axis

According to exercise from “Chapter 8.2.2 Current State Reading,” it is a signal of “Error state” for each axis. It turns on when an error occurred. Operation will only work when there is no error. If you want to operate a system regardless of errors, you can just inactivate the function.

(d) Ready signal for each axis

According to exercise from “Chapter 8.2.2 Current State Reading,” it is a signal of “Drive Ready” for each axis. This command only works when this is the condition for Drive Ready is on.

(e) Address of Positioning Module

In this example, Positioning Module is installed at the 3 slot of 0 bases.

(f) Axis of command execution

You can set an axis for Parameter Setting. XGF series supports for 4 axes. In the “execution of axis” from the configuration of Parameter Setting, you can set a value for axis1 through axis4.

(g) Amount of Point Operation Steps

Decide how many steps will be operated. In this example above, 10 Point Operation steps are set in the axis1. Therefore, the step no. saved in %MW171 ~ %MW180 will be executed by point operation. For the details about point operation, refer to “(4) Point operation” of “9.2.17 Positioning start”.

(h) Address of first device where those data for Step Numbers of Point Operation are saved

To execute a Point Operation, you need to set a specific value first. Point Operation Step Data will be set up depends on number of first device as below table.

Value	Device No.	Point Operating Step Data
1	Device + 0	Point Operating Step Data 1
2	Device + 1	Point Operating Step Data 2
3	Device + 2	Point Operating Step Data 3
4	Device + 3	Point Operating Step Data 4
5	Device + 4	Point Operating Step Data 5
6	Device + 5	Point Operating Step Data 6
7	Device + 6	Point Operating Step Data 7
8	Device + 7	Point Operating Step Data 8
9	Device + 8	Point Operating Step Data 9
10	Device + 9	Point Operating Step Data 10
11	Device + 10	Point Operating Step Data 11
12	Device + 11	Point Operating Step Data 12
13	Device + 12	Point Operating Step Data 13
14	Device + 13	Point Operating Step Data 14
15	Device + 14	Point Operating Step Data 15
16	Device + 15	Point Operating Step Data 16
17	Device + 16	Point Operating Step Data 17
18	Device + 17	Point Operating Step Data 18
19	Device + 18	Point Operating Step Data 19
20	Device + 19	Point Operating Step Data 20

(h) State of Operation complete

If function block is completed without error, “1” will be outputted and maintain “1” until the next operation. If error occurred, “0” will be outputted.

(i) Error State

This is the area that output error no. if there are errors in operation of function block.

(7) Speed Synchronization

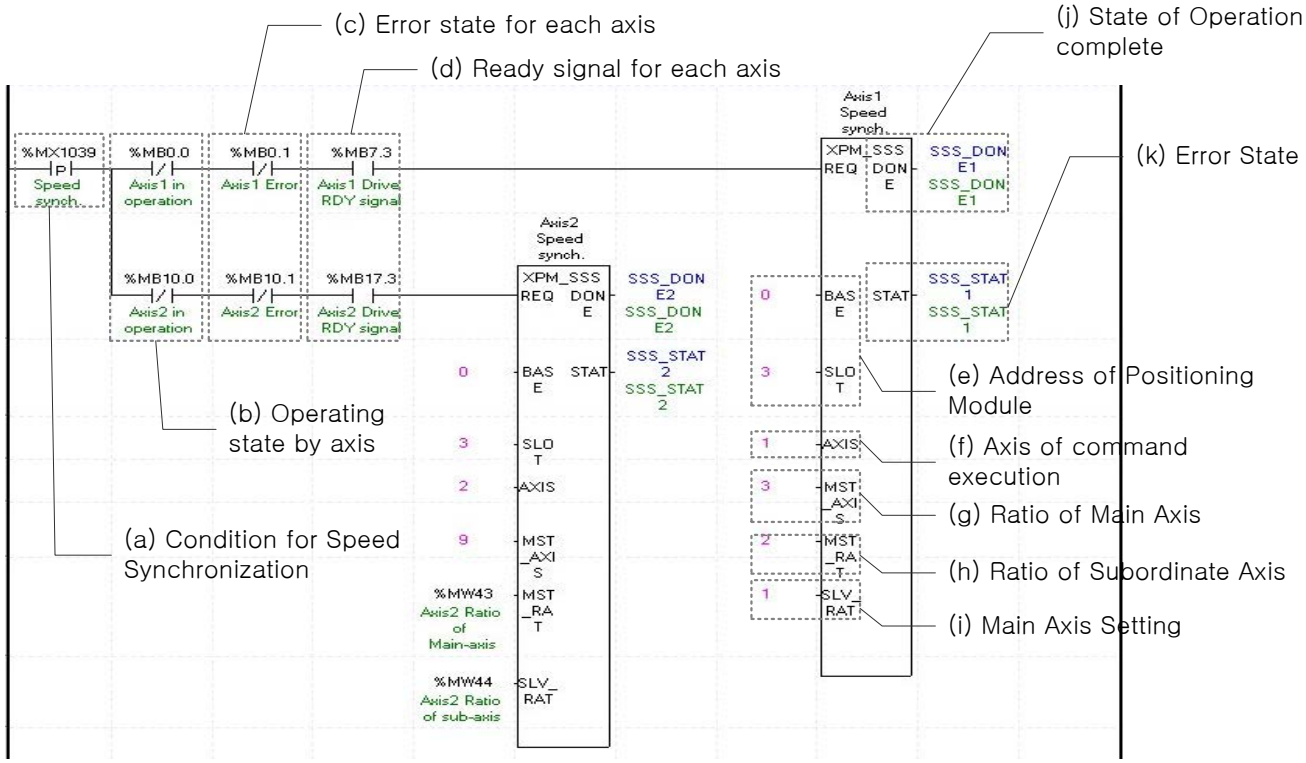

(a) This is the condition for Speed Synchronization

This is the condition for Speed Synchronization Command (XPM_SSS)

(b) Operating state by axis

According to exercise from “Chapter 8.1.2 Current State Reading,” it is a signal of “Operating” for each axis. It turns on when it is operating. Operating Data Setting can not be configured while it is running hence configuration will only be configured when it is not running. If you execute Speed Synchronization while it is running, the “error 351” would be appeared.

(c) Error state for each axis

According to exercise from “Chapter 8.1.2 Current State Reading,” it is a signal of “Error state” for each axis. It turns on when an error occurred. Operation will only work when there is no error. If you want to operate a system regardless of errors, you can just inactivate the function.

(d) Ready signal for each axis

According to exercise from “Chapter 8.1.2 Current State Reading,” it is a signal of “Drive Ready” for each axis. This command only works when this is the condition for Drive Ready is on. If a Drive Ready of main axis is not set as “ON,” the “error 354” would be appeared.

(e) Address of Positioning Module

In this example, Positioning Module is installed at the 3 slot of 0 bases.

(f) Axis of command execution

You can set an axis for Parameter Setting. XGF series supports for 4 axes. In the “execution of axis” from the configuration of Parameter Setting, you can set a value for axis1 through axis4.

(g) Main Axis Setting

Set a main axis to operate Speed Synchronization. This setting is for main axis of Speed Synchronization. This setting cannot be set as same value as Axis of command execution, and possible setting values are as below.

(h) Ratio of Main Axis

Set value for Ratio of Main Axis to execute a Speed Synchronization.

(i) Ratio of Subordinate Axis

Set value for Ratio of Subordinate Axis to execute a Speed Synchronization. In this example above, the ratio of main and subordinate axis is 2:1. Meaning that operational speed ratio of those axis is 2 to 1. So, if main axis is operating in speed of 10000, subordinate axis will be operating in speed of 5000.

Set value	Main Axis
1	Axis1
2	Axis 2
3	Axis 3
4	Axis 4
5	-
6	-
7	-
8	-
9	Encoder

(j) State of Operation complete

If function block is completed without error, “1” will be outputted and maintain “1” until the next operation. If error occurred, “0” will be outputted.

(k) Error State

This is the area that output error no. if there are errors in operation of function block.

(l) For more information, reference for Speed Synchronization is in the “Chapter 9.4.1.”

(8) Position Assign Speed Synchronization

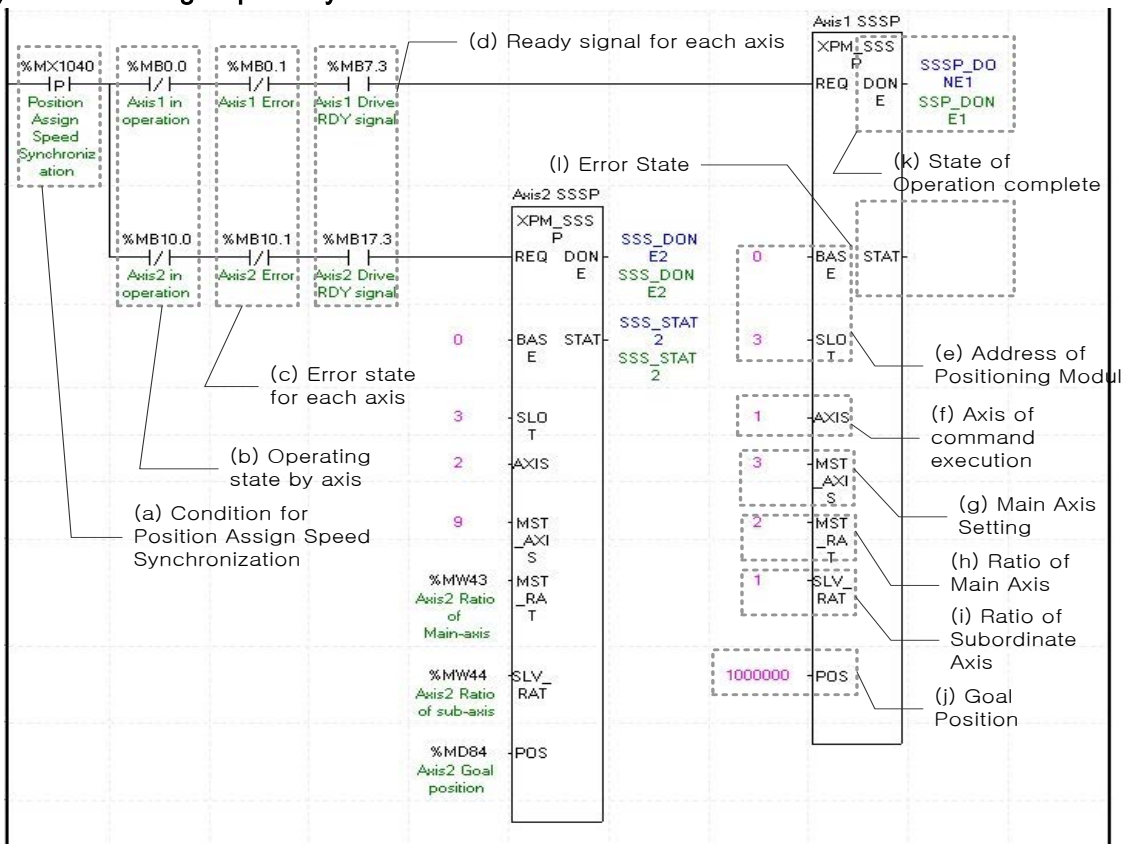

(a) This is the condition for Position Assign Speed Synchronization

This is the condition for Position Assign Speed Synchronization Command (XPM_SSSP)

(b) Operating state by axis

According to exercise from “Chapter 8.1.2 Current State Reading,” it is a signal of “Operating” for each axis. It turns on when it is operating. Operating Data Setting can not be configured while it is running hence configuration will only be configured if it is not running. If you execute Position Assign Speed Synchronization while it is running, the “error 351” would be appeared.

(c) Error state for each axis

According to exercise from “Chapter 8.1.2 Current State Reading,” it is a signal of “Error state” for each axis. It turns on when an error occurred. Operation will only work when there is no error. If you want to operate a system regardless of errors, you can just inactivate the function.

(d) Ready signal for each axis

According to exercise from “Chapter 8.1.2 Current State Reading,” it is a signal of “Drive Ready” for each axis. This command only works when this is the condition for Drive Ready is on. If a Drive Ready of main axis is not set as “ON,” the “error 354” would be appeared.

(e) Address of Positioning Module

In this example, Positioning Module is installed at the 3 slot of 0 bases.

(f) Axis of command execution

You can set an axis for Parameter Setting. XGF series supports for 4 axes. In the “execution of axis” from the configuration of Parameter Setting, you can set a value for axis1 through axis4.

(g) Main Axis Setting

Set a main axis to operate Speed Synchronization. This setting is for main axis of Speed Synchronization. This setting cannot be set as same value as Axis of command execution, and possible setting values are as below.

(h) Ratio of Main Axis

Set value for Ratio of Main Axis to execute a Speed Synchronization.

(i) Ratio of Subordinate Axis

Set value for Ratio of Subordinate Axis to execute a Speed Synchronization. In this example above, the ratio of main and subordinate axis is 2:1. Meaning that operational speed ratio of those axes are 2 to 1. So, if main axis is operating in speed of 10000, subordinate axis will be operating in speed of 5000.

Set value	Main Axis
1	Axis1
2	Axis 2
3	Axis 3
4	Axis 4
5	-
6	-
7	-
8	-
9	Encoder

(j) Goal Position

Set goal of Position Assign Speed Synchronization. Once Axis of command execution reaches the goal position, Speed Synchronization ends and operation will be stop immediately.

(k) State of Operation complete

If function block is completed without error, “1” will be outputted and maintain “1” until the next operation. If error occurred, “0” will be outputted.

(l) Error State

This is the area that output error no. if there are errors in operation of function block.

(m) For more information, reference for Position Assign Speed Synchronization is in the “Chapter 9.4.1.”

(9) Synchronous Start by Position

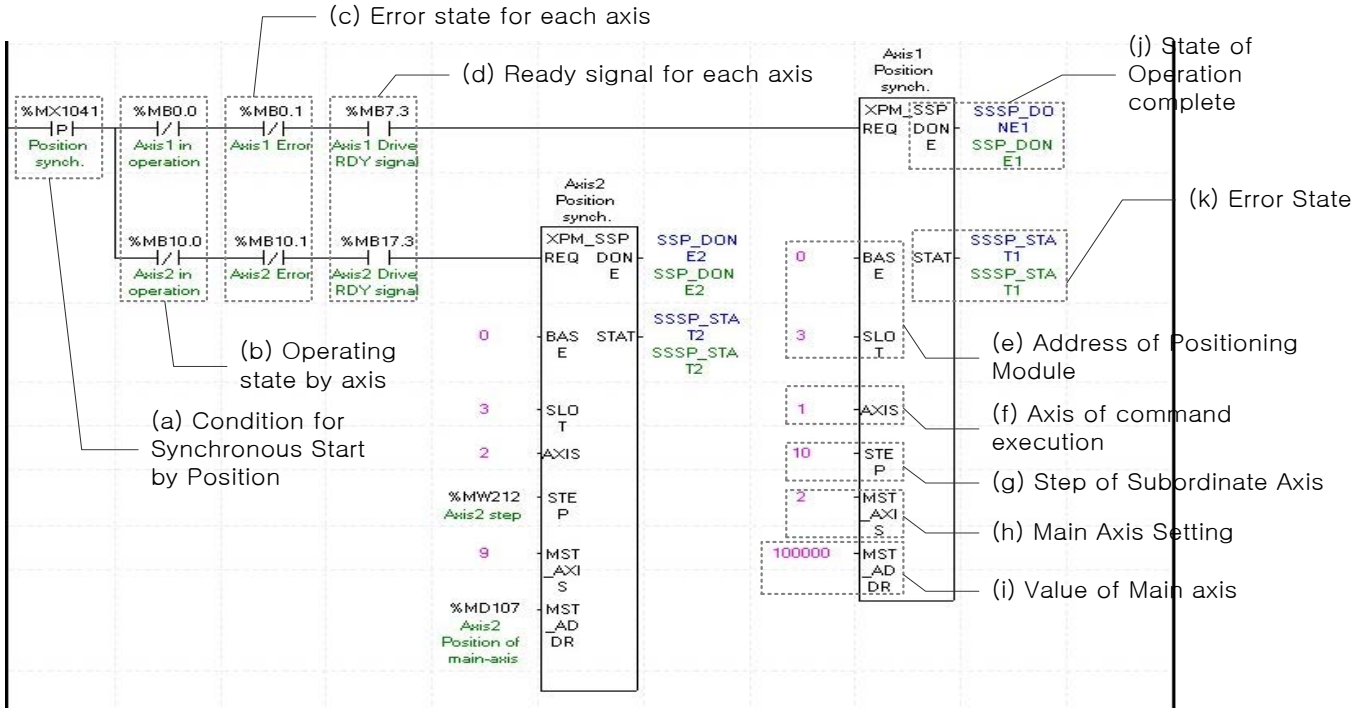

(a) This is the condition for Synchronous Start by Position

This is the condition for Synchronous Start by Position Command (XPM_SSP)

(b) Operating state by axis

According to exercise from “Chapter 8.1.2 Current State Reading,” it is a signal of “Operating” for each axis. It turns on when it is operating. Operating Data Setting can not be configured while it is running hence configuration will only be configured when it is not running. If you execute Synchronous Start by Position while it is running, the “error 341” would be appeared.

(c) Error state for each axis

According to exercise from “Chapter 8.1.2 Current State Reading,” it is a signal of “Error state” for each axis. It turns on when an error occurred. Operation will only work when there is no error. If you want to operate a system regardless of errors, you can just inactivate the function.

(d) Ready signal for each axis

According to exercise from “Chapter 8.1.2 Current State Reading,” it is a signal of “Drive Ready” for each axis. This command only works when this is the condition for Drive Ready is on. If a Drive Ready of main axis is not set as “ON,” the “error 354” would be appeared.

(e) Address of Positioning Module

In this example, Positioning Module is installed at the 3 slot of 0 bases.

(f) Axis of command execution

You can set an axis for Parameter Setting. XGF series supports for 4 axes. In the “execution of axis” from the configuration of Parameter Setting, you can set a value for axis1 through axis4.

(g) Step of Subordinate Axis

Set step number for Subordinate Axis to execute a Speed Synchronization.

(h) Main Axis Setting

Set a main axis to operate Speed Synchronization. This setting is for main axis of Speed Synchronization. This setting cannot be set as same value as Axis of command execution, and possible setting values are as below.

(i) Value of Main Axis

Set value for Main Axis to execute Synchronous Start by Position. Therefore main axis will be executed the command when the subordinate axis reaches this set value.

Set value	Main Axis
1	Axis1
2	Axis 2
3	Axis 3
4	Axis 4
5	-
6	-
7	-
8	-
9	Encoder

(j) State of Operation complete

If function block is completed without error, “1” will be outputted and maintain “1” until the next operation. If error occurred, “0” will be outputted.

(k) Error State

This is the area that output error no. if there are errors in operation of function block.

(l) For more information, reference for Synchronous Start by Position is in the “Chapter 9.4.2.”

(10) CAM Operation

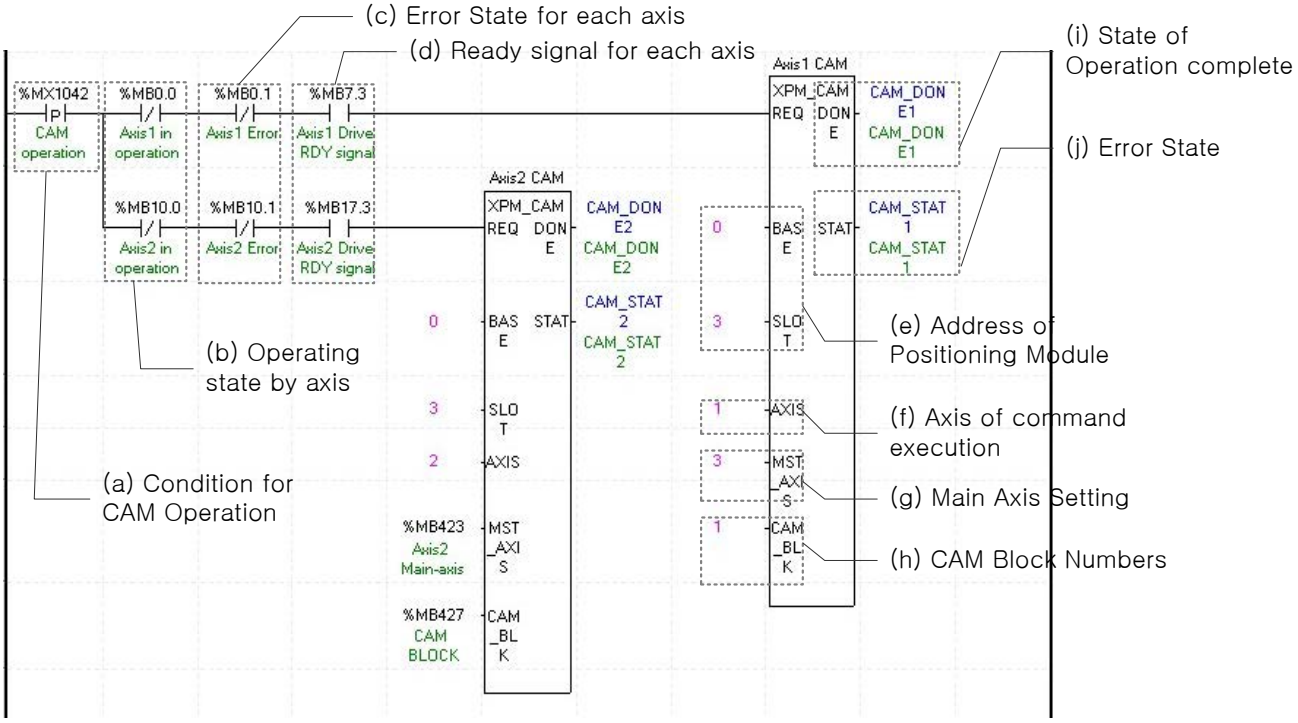

(a) This is the condition for CAM Operation

This is the condition for CAM Operation Command (XPM_CAM)

(b) Operating state by axis

According to exercise from “Chapter 8.1.2 Current State Reading,” it is a signal of “Operating” for each axis. It turns on when it is operating. Operating Data Setting can not be configured while it is running hence configuration will only be configured when it is not running. If you execute CAM Operation while it is running, the “error 701” would be appeared.

(c) Error state for each axis

According to exercise from “Chapter 8.1.2 Current State Reading,” it is a signal of “Error state” for each axis. It turns on when an error occurred. Operation will only work when there is no error. If you want to operate a system regardless of errors, you can just inactivate the function.

(d) Ready signal for each axis

According to exercise from “Chapter 8.1.2 Current State Reading,” it is a signal of “Drive Ready” for each axis. This command only works when this is the condition for Drive Ready is on. If a Drive Ready of main axis is not set as “ON,” the “error 703” would be appeared.

(e) Address of Positioning Module

In this example, Positioning Module is installed at the 3 slot of 0 bases.

(f) Axis of command execution

You can set an axis for Parameter Setting. XGF series supports for 4 axes. In the “execution of axis” from the

configuration of Parameter Setting, you can set a value for axis1 through axis4.

(g) Main Axis Setting

Setting of main axis to operate .This setting is for main axis of CAM Operating. This setting cannot be set as same value as Axis of command execution. Can set a value 1~4, meaning from axis1 to axis 4.

(h) CAM Block Numbers

Setting for Block Numbers of CAM data to operate CAM operation. XGF series support 8 CAM Blocks. The CAM Data for each Block would be downloaded to module written from Software Package.

(i) Main Axis offset

In case main offset assigned CAM operation command(XPM_CAM0) Second axis set the main axis offset Starting position. When starting command, move to position set in main axis offset and then second axis start CAM operation.

(j) State of Operation complete

If function block is completed without error, “1” will be outputted and maintain “1” until the next operation. If error occurred, “0” will be outputted.

(k) Error State

This is the area that output error no. if there are errors in operation of function block.

(l) For more information, reference of CAM Operation is in the “Chapter 9.4.3.”

(11) Deceleration Stop

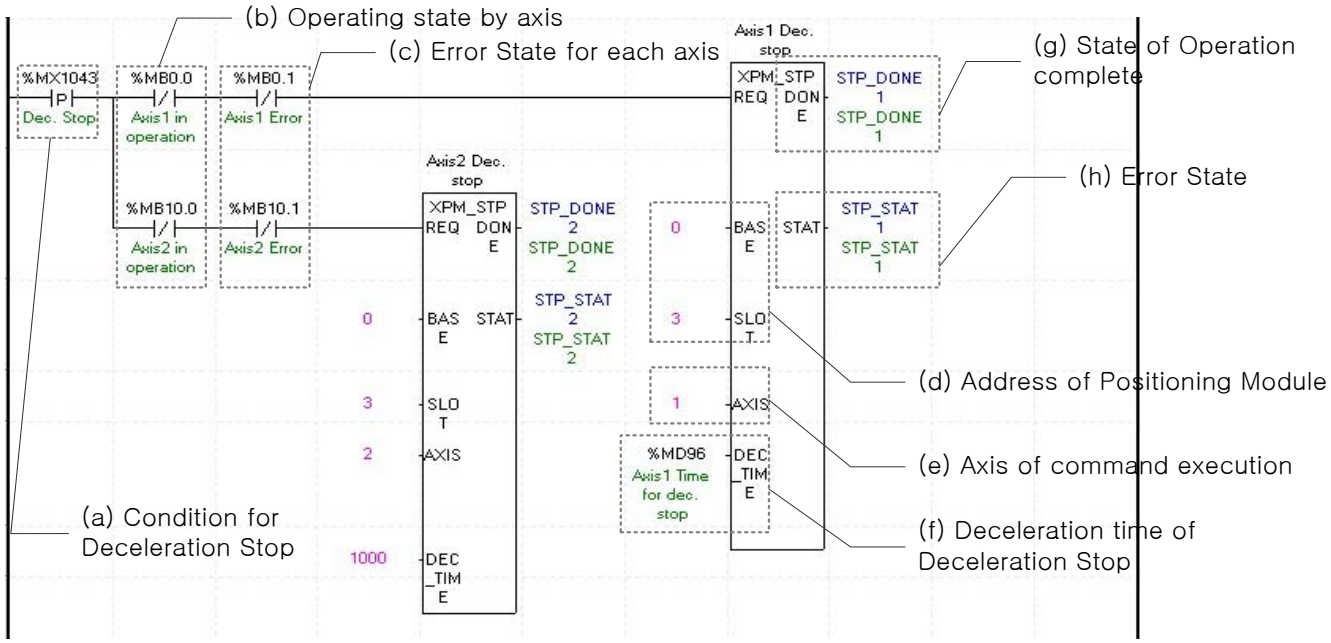

(a) This is the condition for Deceleration Stop

This is the condition for Deceleration Stop Command (XPM_STP)

(b) Operating state by axis

According to exercise from “Chapter 8.2.2 Current State Reading,” it is a signal of “Operating” for each axis. It turns on when it is operating. Operating Data Setting can not be configured while it is running hence configuration will only be configured when it is not running.

(c) Error state for each axis

According to exercise from “Chapter 8.2.2 Current State Reading,” it is a signal of “Error state” for each axis. It turns on when an error occurred. Operation will only work when there is no error. If you want to operate a system regardless of errors, you can just inactivate the function.

(d) Address of Positioning Module

In this example, Positioning Module is installed at the 3 slot of 0 bases.

(e) Axis of command execution

You can set an axis for Parameter Setting. XGF series supports for 4 axes. In the “execution of axis” from the configuration of Parameter Setting, you can set a value for axis1 through axis4.

(f) Deceleration time of Deceleration Stop

Set a deceleration time of Deceleration Stop operation. Unit of Deceleration Stop is [ms]. Since this time refers deceleration time from the speed limit, there might be little difference between Deceleration Stop set time and actual stop time. The range of deceleration time is “0~2,147,483,674.” 1~2,147,483,674 means

Deceleration Time set as 1ms ~ 2,147483674ms. If it set as “0,” it will be operated with set deceleration value. Also it use to stop Speed Synchronous Operation or CAM Operation while Speed and CAM Operation. During this time Deceleration Time is meaningless, CAM Operation Is just cancelled.

(g) State of Operation complete

If function block is completed without error, “1” will be outputted and maintain “1” until the next operation. If error occurred, “0” will be outputted.

(h) Error State

This is the area that output error no. if there are errors in operation of function block.

(i) For more information, reference of Deceleration Stop is in the “Chapter 9.2.18.”

(j) Operation of each function block is as follows.

Axis1 Dec. Time : When axis1 is in operation, decelerate to %MD96(axis1 Dec. stop Time), then stop.

Axis2 Dec. Time : When axis 2 is in operation, decelerate to 1000ms, then stop.

(12) Emergency Stop

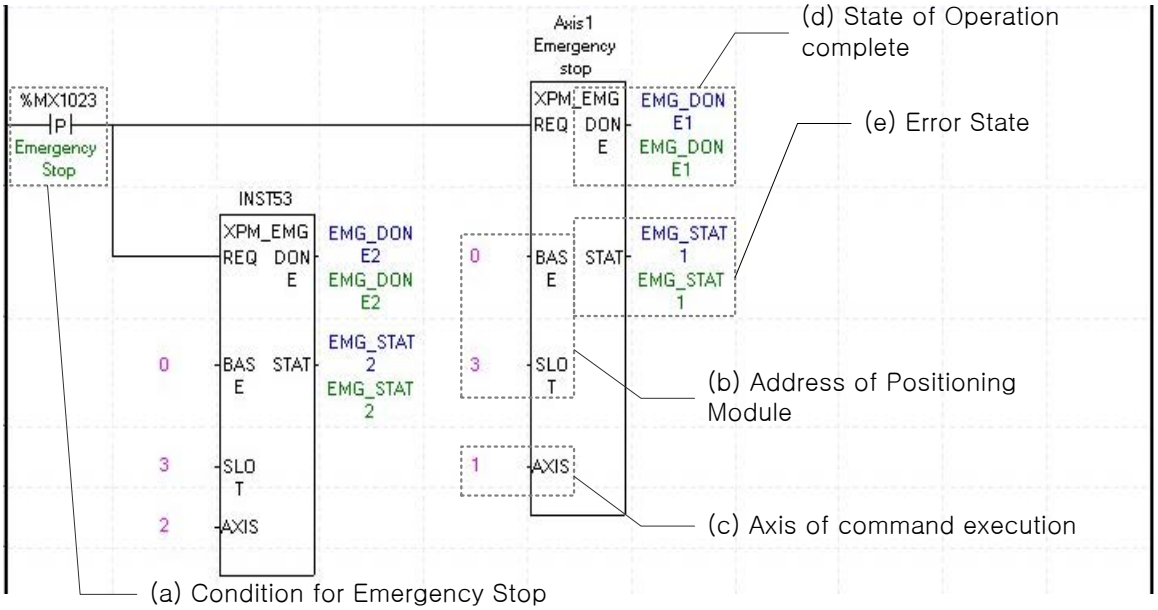

(a) This is the condition for Emergency Stop

This is the condition for Emergency Stop Command (XEMG)

(b) Address of Positioning Module

In this example, Positioning Module is installed at the 3 slot of 0 bases.

(c) Axis of command execution

You can set an axis for Parameter Setting. XGF series supports for 4 axes. In the “execution of axis” from the configuration of Parameter Setting, you can set a value for axis1 through axis4.

(d) State of Operation complete

If function block is completed without error, “1” will be outputted and maintain “1” until the next operation. If error occurred, “0” will be outputted.

(e) Error State

This is the area that output error no. if there are errors in operation of function block.

(f) Emergency Stop is operating by each axis.

Once Emergency Stop command executes the error “481” would be occurred. With the set value for deceleration time, it will be decelerated and stop the operation

(g) For more information, reference of Emergency Stop is in the “Chapter 9.2.18.”

(13) M code Cancellation

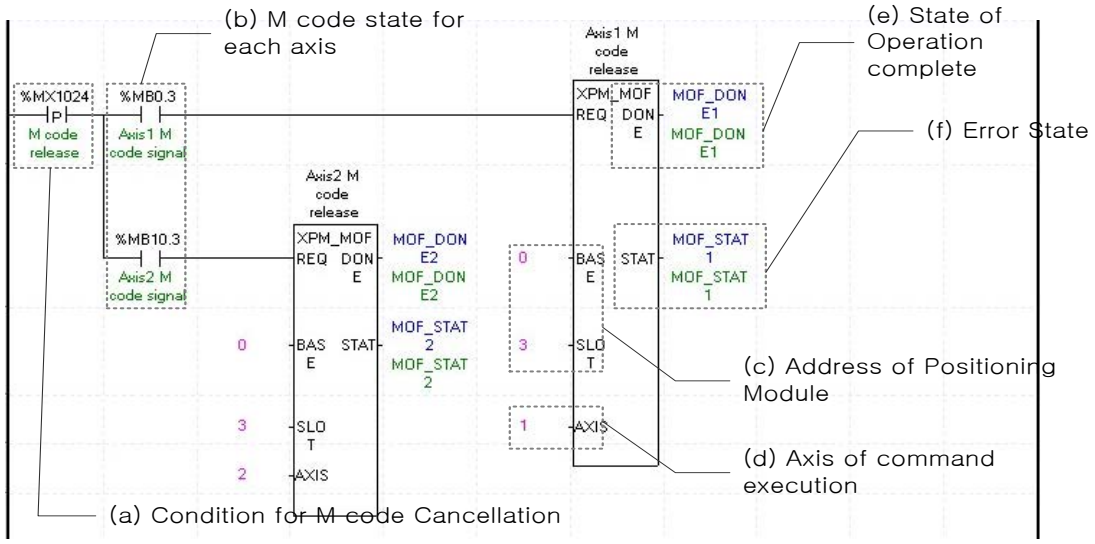

(a) This is the condition for M code Cancellation

This is the condition for M code Cancellation (XPM_MOF). Once M code Cancellation command executed, number of M code would be change to “0,” and signal of M code to “Off.”

(b) M code state for each axis

According to exercise from “Chapter 8.2.2 Current State Reading,” it is a signal of “M Code” for each axis. It turns on when it is operating. M code Cancellation command can only be valid once M code are generated. The condition for execution is operation possible when it is “On.”

(c) Address of Positioning Module

In this example, Positioning Module is installed at the 3 slot of 0 bases.

(d) Axis of command execution

You can set an axis for Parameter Setting. XGF series supports for 4 axes. In the “execution of axis” from the configuration of Parameter Setting, you can set a value for axis1 through axis4.

(e) State of Operation complete

If function block is completed without error, “1” will be outputted and maintain “1” until the next operation. If error occurred, “0” will be outputted.

(f) Error State

This is the area that output error no. if there are errors in operation of function block.

(g) For more information, reference of M code Cancellation is in the “Chapter 9.6.2.”

(14) Setting Position Output Enable/Disable

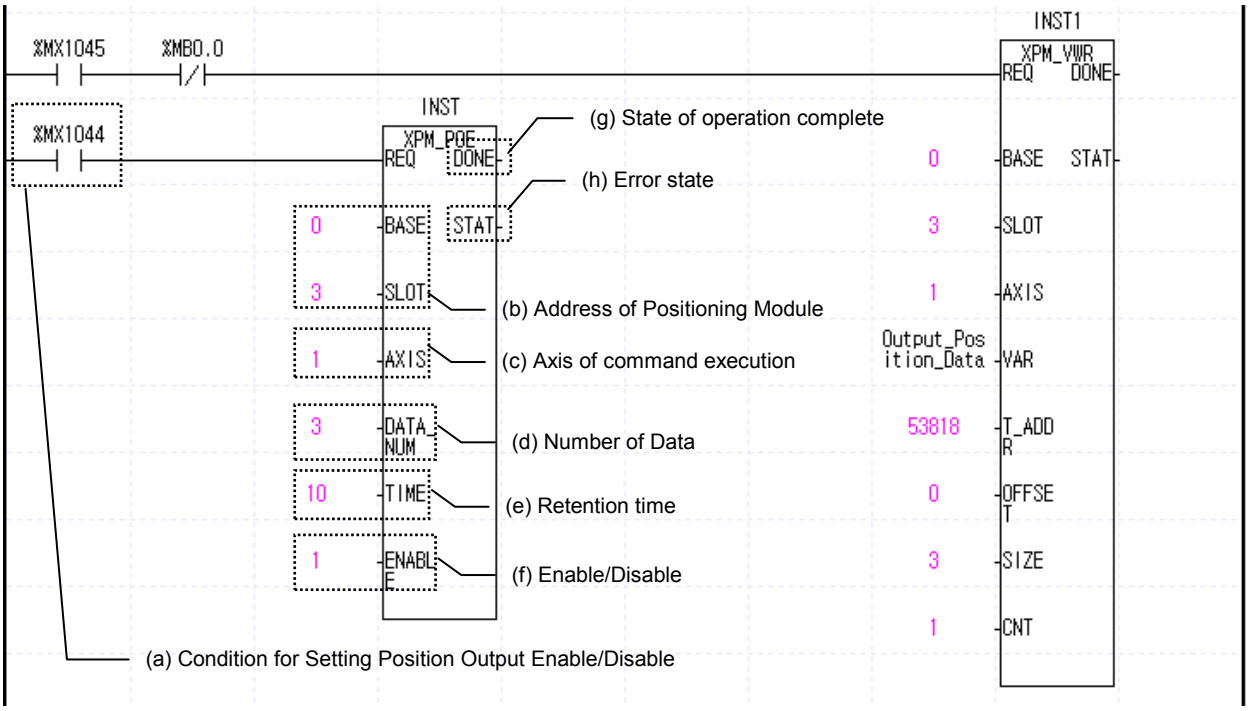

(a) This is the condition for Setting Position Output Enable/Disable

This is the condition for Setting Position Output Enable/Disable (XPM_POE)

(b) Address of Positioning Module

In this example, Positioning Module installed at the slot no.3 of 0 bases.

(c) Axis of command execution

You can set an axis for Setting Position Output Enable/Disable command. XGF series supports for 4 axes. In the “execution of axis” from the configuration of Parameter Setting, you can set a value for axis 1 through 4 axes.

(d) The number of data

Set the number of data of the setting position output signal’s position data. As the number of data, the following values can be set. 0 ~ 50 (If data count is 0, it means it sets (f) Enable/Disable operand 0: Disable.)

(e) Retention Time

Set time from the time when the setting position output signal is On to the time when it is Off. If the current position becomes the setting position that has been set, it will be off after when the set time lapses after the position output signal is On.

(f) Enable/Disable

Set whether to enable or disable the setting position output function. The following values can be set. If the setting position output function is disabled and an order is issued, the current signal will be immediately OFF.

(g) Set the position data of setting position output first and then enable the setting position output function. In the example, three position data are set to Axis 1's setting position output by using the Write Variable Data command (XVWR). The Setting Position Output Enable/Disable command enables the setting position output function that has three setting position data for Axis 1 and 10ms for retention time. If the setting position output function is enabled through the Setting Position Output enable/Disable command, the setting position output signal will be On at Position 1000, 2000 and 3000 for 10ms respectively and then after 10 m, it will be off.

(h) State of Operation complete

If function block is completed without error, "1" will be outputted and maintain "1" until the next operation. If error occurred, "0" will be outputted.

(i) Error State

This is the area that output error no. if there are errors in operation of function block.

(i) For more information, reference of Setting Position Output Enable/Disable is in the "Chapter 9.2.19."

8.2.6 Operation Setting Change while Operating

(1) Speed Override

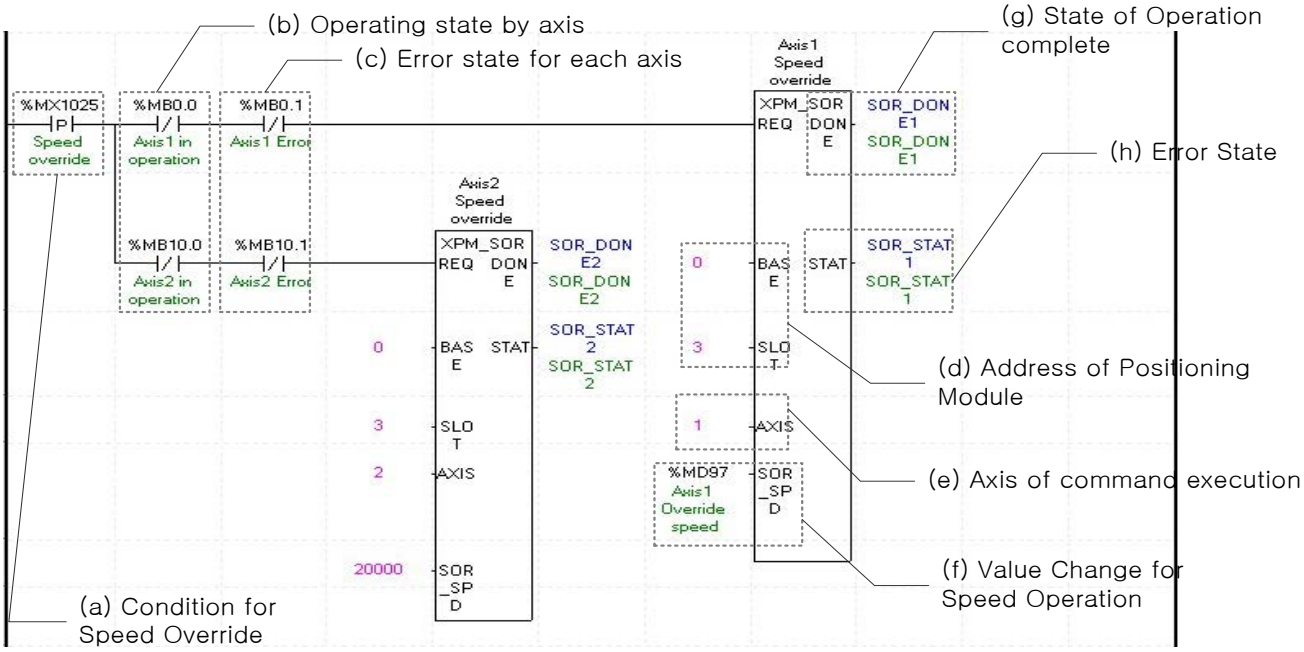

(a) This is the condition for Speed Override

This is the condition for Speed Override Command (XPM_SOR)

(b) Operating state by axis

According to exercise from “Chapter 8.2.2 Current State Reading,” it is a signal of “Operating” for each axis. It turns on when it is operating. Operating Data Setting can not be configured while it is running hence configuration will only be configured when it is not running. If you execute Speed Override while it is running, the “error 371” would be appeared.

(c) Error state for each axis

According to exercise from “Chapter 8.2.2 Current State Reading,” it is a signal of “Error state” for each axis. It turns on when an error occurred. Operation will only work when there is no error. If you want to operate a system regardless of errors, you can just inactivate the function.

(d) Address of Positioning Module

In this example, Positioning Module is installed at the 3 slot of 0 bases.

(e) Axis of command execution

You can set an axis for Parameter Setting. XGF series supports for 4 axes. In the “execution of axis” from the configuration of Parameter Setting, you can set a value for axis1 through axis4.

(f) Value Change for Speed Operation

Set speed value. According to Speed Override from common parameters, it is a signal of “%” or “Speed Value” depends on setting of category. Also, when Speed Override set as Speed Value, it means Unit/Time depends on Speed Command Unit from basic parameters, or it means “rpm.” If a changing Operation Speed Value is “%,” then the unit would be [$X10^{-2}$%]. If it is “rpm, “then the unit would be $X10^{-1}$rpm].

(g) State of Operation complete

If function block is completed without error, “1” will be outputted and maintain “1” until the next operation. If error occurred, “0” will be outputted.

(h) Error State

This is the area that output error no. if there are errors in operation of function block.

(i) The function block in the example above is as follows.

Axis1 Speed Override : The operating speed of axis1 will be changed to speed value saved in %MD97 and then continue to operate.

Axis2 Speed Override : The operating speed of axis2 will be changed to 20000 and then continue to operate.

(j) For more information, reference of Speed Override is in the “Chapter 9.5.5.”

(2) Position Override

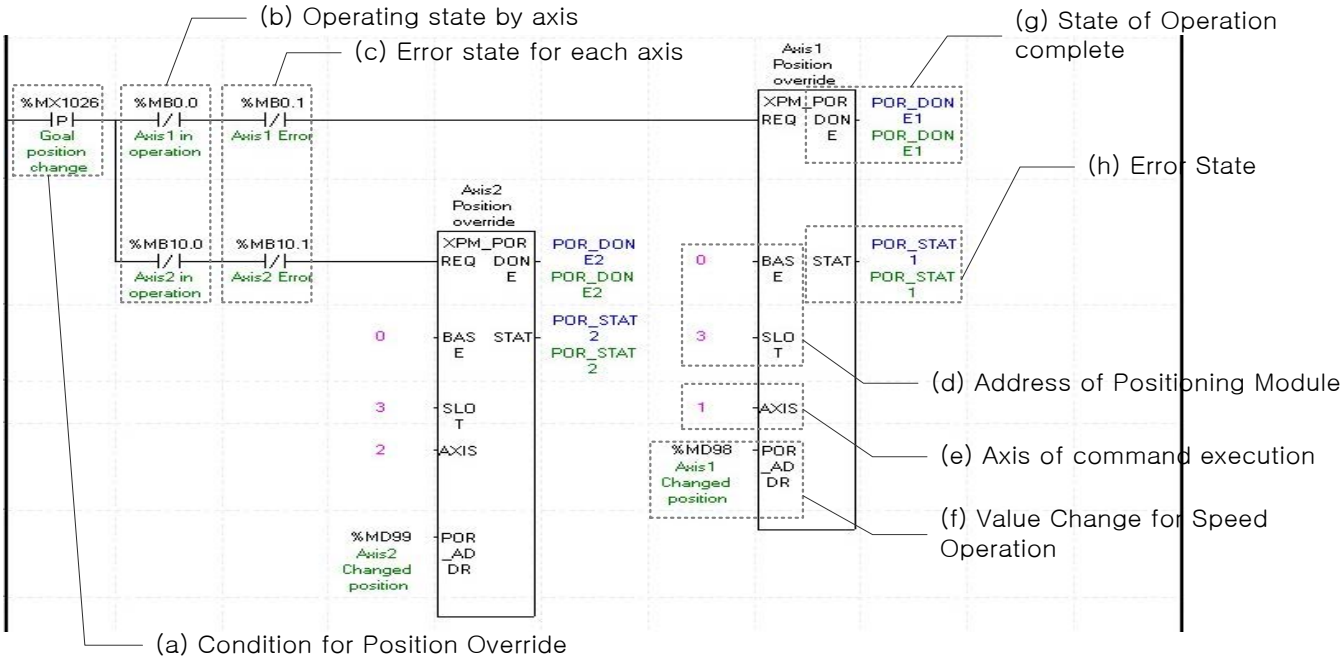

(a) This is the condition for Position Override

This is the condition for Position Override Command (XPM_POR)

(b) Operating state by axis

According to exercise from “Chapter 8.2.2 Current State Reading,” it is a signal of “Operating” for each axis. It turns on when it is operating. Operating Data Setting can not be configured while it is running hence configuration will only be configured when it is not running. If you execute Position Override while it is running, the “error 361” would be appeared.

(c) Error state for each axis

According to exercise from “Chapter 8.2.2 Current State Reading,” it is a signal of “Error state” for each axis. It turns on when an error occurred. Operation will only work when there is no error. If you want to operate a system regardless of errors, you can just inactivate the function.

(d) Address of Positioning Module

In this example, Positioning Module is installed at the 3 slot of 0 bases.

(e) Axis of command execution

You can set an axis for Parameter Setting. XGF series supports for 4 axes. In the “execution of axis” from the configuration of Parameter Setting, you can set a value for axis1 through axis4.

(f) Change for Goal Position Value

Setting Value Change for Goal Position Value. The unit of this value depends on “Unit” category. Once Position Override commands are executed, the goal position of executed axis will be changed to set goal position.

(g) State of Operation complete

If function block is completed without error, “1” will be outputted and maintain “1” until the next operation. If error occurred, “0” will be outputted.

(h) Error State

This is the area that output error no. if there are errors in operation of function block.

(i) The function block in the example above is as follows.

Axis1 Position Override : Goal position of axis1 is changed to the value saved in %MD98.

Axis2 Position Override : Goal position of axsi2 is changed to the value saved in %MD99.

(j) For more information, reference of Position Override is in the “Chapter 9.5.4.”

(3) Position Assign Speed Override

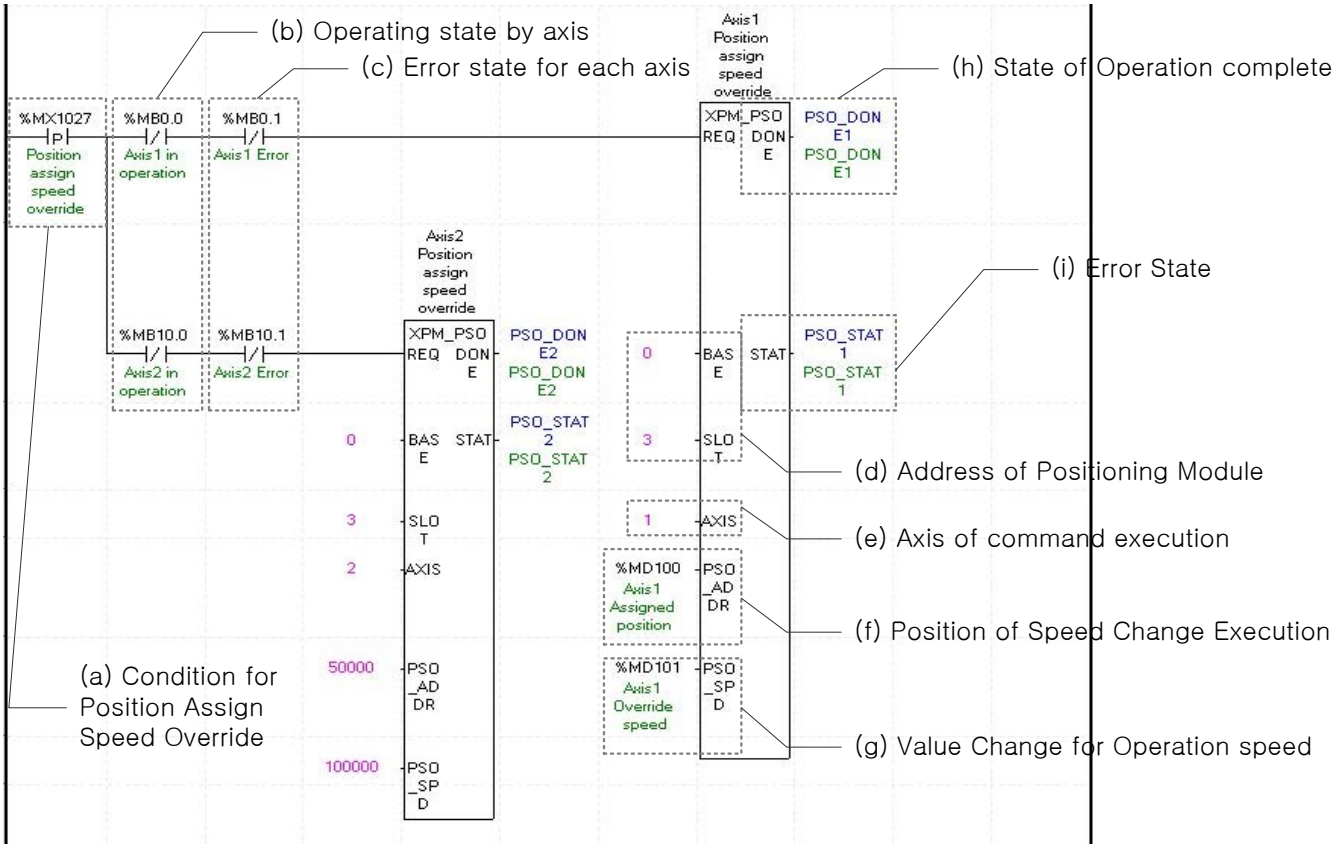

(a) This is the condition for Position Assign Speed Override

This is the condition for Position Assign Speed Override Command (XPM_PSO)

(b) Operating state by axis

According to exercise from “Chapter 8.2.2 Current State Reading,” it is a signal of “Operating” for each axis. It turns on when it is operating. Operating Data Setting can not be configured while it is running hence configuration will only be configured when it is not running. If you execute Position Assign Speed Override while it is running, the “error 381” would be appeared.

(c) Error state for each axis

According to exercise from “Chapter 8.2.2 Current State Reading,” it is a signal of “Error state” for each axis. It turns on when an error occurred. Operation will only work when there is no error. If you want to operate a system regardless of errors, you can just inactivate the function.

(d) Address of Positioning Module

In this example, Positioning Module is installed at the 3 slot of 0 bases.

(e) Axis of command execution

You can set an axis for Parameter Setting. XGF series supports for 4 axes. In the “execution of axis” from the configuration of Parameter Setting, you can set a value for axis1 through axis4.

(f) Position of Speed Change Execution

Set the position of Speed Change. Once the actual position located at set position with speed override command running, the speed change commands are executed.

(g) Value Change for Operation speed

Set the Value Change for Operation speed. According to Speed Override from common parameters, it is a signal of “%” or “Speed Value” depends on setting of category. Also, when Speed Override set as Speed Value, it means Unit/Time depends on Speed Command Unit from basic parameters, or it means “rpm.” If a changing Operation Speed Value is “%,” then the unit would be [$X10^{-2}$%]. If it is “rpm, “then the unit would be $X10^{-1}$rpm].

(h) State of Operation complete

If function block is completed without error, “1” will be outputted and maintain “1” until the next operation. If error occurred, “0” will be outputted.

(i) Error State

This is the area that output error no. if there are errors in operation of function block.

(j) The function block in the example above is as follows.

Axis1 Positioning Speed Override : When the current position of axis1 become the same position as the position saved in %MD100, the speed value will be changed to the speed saved in %MD92.

Axis2 Positioning Speed Override : When the current position of axis1 become 50000, the speed will be changed to 100000.

(k) For more information, reference of Position Assign Speed Override is in the “Chapter 9.5.6.”

(4) Speed/Position Switching Control

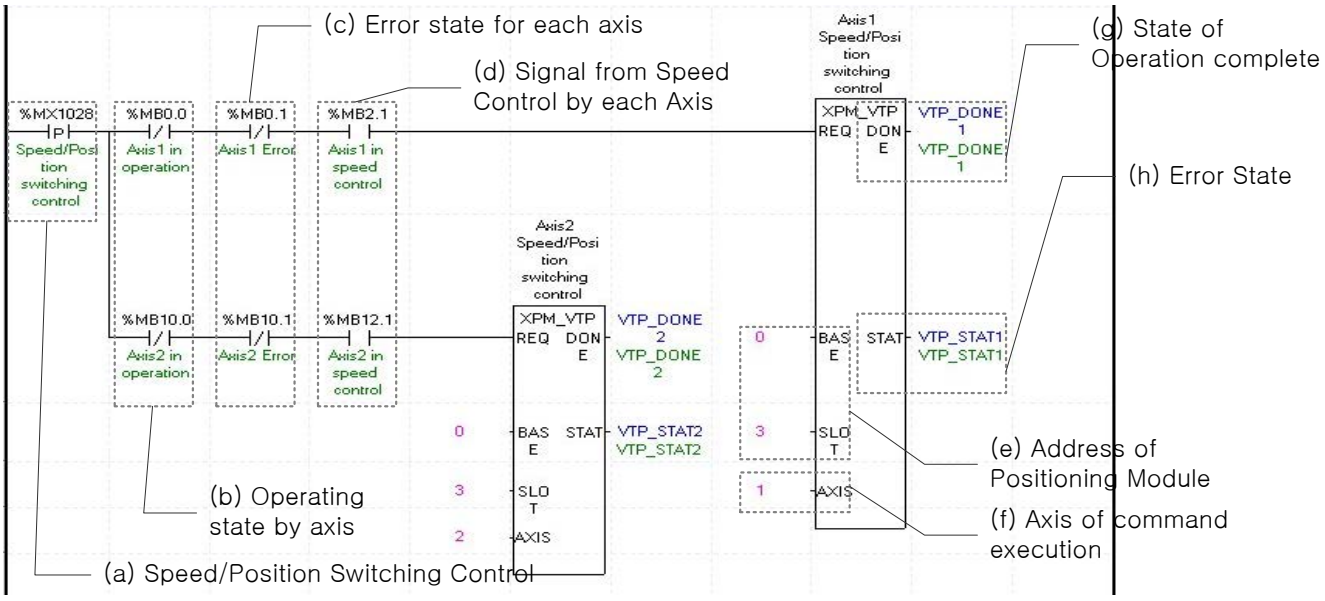

(a) This is the condition for Speed/Position Switching Control

This is the condition for Speed/Position Switching Control Command (XPM_VTP)

(b) Operating state by axis

According to exercise from “Chapter 8.2.2 Current State Reading,” it is a signal of “Operating” for each axis. It turns on when it is operating. Operating Data Setting can not be configured while it is running hence configuration will only be configured when it is not running. If you execute Speed/Position Switching Control while it is running, the “error 301” would be appeared.

(c) Error state for each axis

According to exercise from “Chapter 8.2.2 Current State Reading,” it is a signal of “Error state” for each axis. It turns on when an error occurred. Operation will only work when there is no error. If you want to operate a system regardless of errors, you can just inactivate the function.

(d) Signal from Speed Control by each Axis

According to exercise from “Chapter 8.2.2 Current State Reading,” it is a signal of “Speed Control state” for each axis. It turns on when it is operating. Speed/Position Switching Control Setting can only be configured while it is running. If you execute Speed/Position Switching Control while it is not running, the “error 302” would be appeared.

(e) Address of Positioning Module

In this example, Positioning Module is installed at the 3 slot of 0 bases.

(f) Axis of command execution

You can set an axis for Parameter Setting. XGF series supports for 4 axes. In the “execution of axis” from the configuration of Parameter Setting, you can set a value for axis1 through axis4.

(g) State of Operation complete

If function block is completed without error, “1” will be outputted and maintain “1” until the next operation. If error occurred, “0” will be outputted.

(h) Error State

This is the area that output error no. if there are errors in operation of function block.

(i) For more information, reference of Speed/Position Switching Control is in the “Chapter 9.2.14.”

(5) Position Specified Speed/Position Switching Control

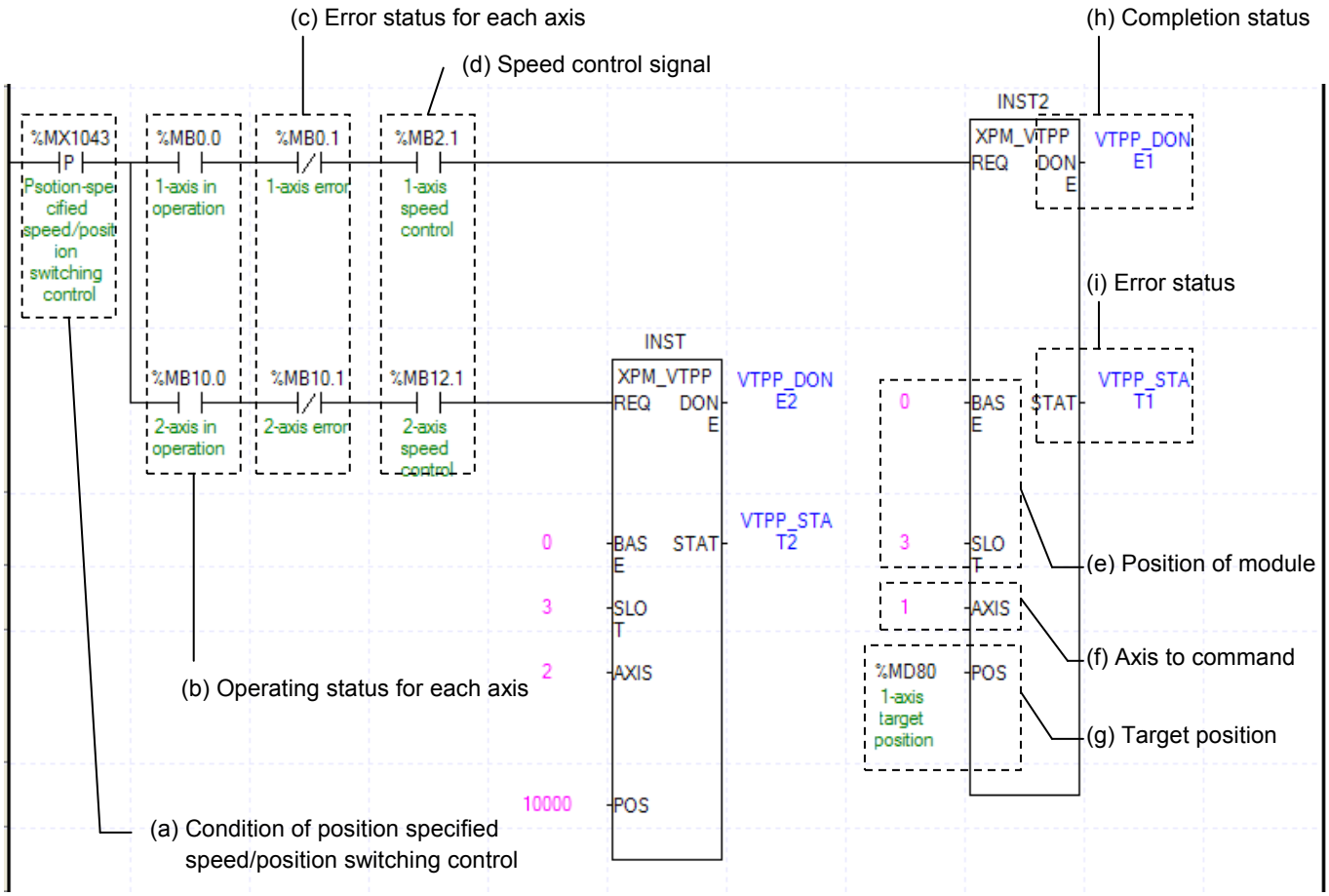

(a) Condition to perform “position-specified speed/position switching control”

Condition to perform control command (XPM_VTPP) for position-specified speed/position switching

(b) Operation state for each axis

In case that an example program of“8.1.2 Read Current State” is applied, it is a signal showing that each axis is “operating.” If a relevant axis is running, it becomes ‘On’. A condition has been set to make the control command for position specified speed/position switching valid only when the relevant axis is running. If the control command for position specified switching is carried out when the relevant axis is not running, No.301 Error will take place.

(c) Error State for each axis

In case that an example program of“8.1.2 Read Current State” is applied, it is a signal showing “Error State” for each axis. If any error takes place, it becomes ‘On’. A condition has been set to perform a control command only when there is no error with the relevant axis. If the user wants to execute a command regardless of the occurrence of errors, he/she may remove this condition.

(d) Speed Control Signal for each axis

In case that an example program of“8.1.2 Read Current State” is applied, it is a signal showing each axis is “controlling its speed.” If the relevant axis is running under speed control, it becomes ‘On.’ A condition has been set to make the control command for position specified speed/position switching control valid only when the relevant axis is in a speed control status. If the control command is carried out when the relevant axis is not in a speed control status, No.302 Error will take place.

(e) Position of a module

For the example program above, it is assumed that positioning modules are installed on NO.0 Base and No. 3 Slot.

(f) Axis to make a command

Decide an axis that will execute the control command. XGF-P□□H can control up to four axes and assign 1 through 4 referring to 1-axis through 4-axis for this item.

(g) Transfer amount

After the control command for position specified speed/position control switching is executed, convert from speed control to position control and moves by transfer amount.

(h) Completion state

If any function block is completely executed without any error, it displays and maintains “1” until the next execution while it displays“0” if any error takes place.

(i) Error state

If any error takes place when any function block is executed, this area generates its error number.

(j) For details on the operation of position specified speed/position switching control, refer to “position specified speed/position switching control”

(6) Position/ Speed Switching Control

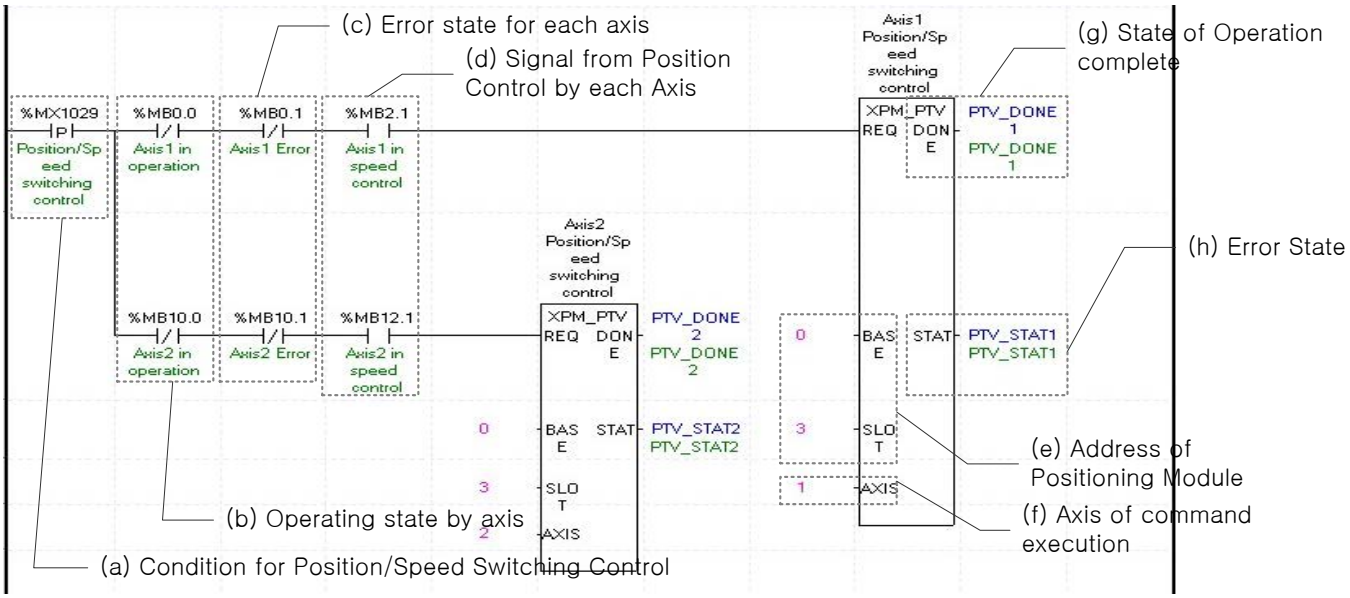

(a) This is the condition for Position/ Speed Switching Control

This is the condition for Position/ Speed Switching Control Command (XPM_PTV)

(b) Operating state by axis

According to exercise from “Chapter 8.2.2 Current State Reading,” it is a signal of “Operating” for each axis. It turns on when it is operating. Operating Data Setting can not be configured while it is running hence configuration will only be configured when it is not running. If you execute Position/ Speed Switching Control while it is running, the “error 311” would be appeared.

(c) Error state for each axis

According to exercise from “Chapter 8.2.2 Current State Reading,” it is a signal of “Error state” for each axis. It turns on when an error occurred. Operation will only work when there is no error. If you want to operate a system regardless of errors, you can just inactivate the function.

(d) Signal from Position Control by each Axis

According to exercise from “Chapter 8.2.2 Current State Reading,” it is a signal of “Position Control state” for each axis. It turns on when it is operating. Position/ Speed Switching Control Setting can only be configured while it is running. If you execute Position/Speed Switching Control while it is not running, the “error 317” would be appeared.

(e) Address of Positioning Module

In this example, Positioning Module is installed at the 3 slot of 0 bases.

(f) Axis of command execution

You can set an axis for Parameter Setting. XGF series supports for 4 axes. In the “execution of axis” from the configuration of Parameter Setting, you can set a value for axis1 through axis4.

(g) State of Operation complete

If function block is completed without error, “1” will be outputted and maintain “1” until the next operation. If error occurred, “0” will be outputted.

(h) Error State

This is the area that output error no. if there are errors in operation of function block.

(i) For more information, reference of Position/ Speed Switching Control is in the “Chapter 9.2.15.”

(7) Skip Operation

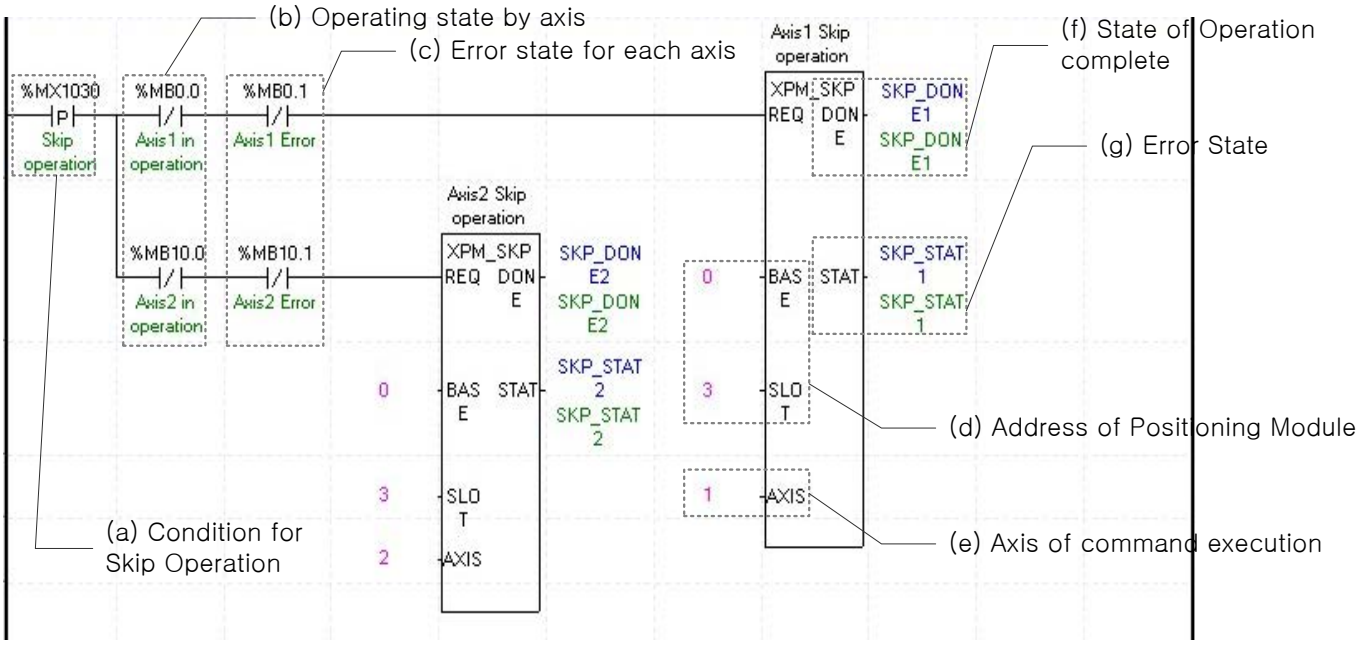

(a) This is the condition for Skip Operation

This is the condition for Skip Operation Command (XPM_SKP) Once Skip Operation is executed, current operation step is stop and will go to operate with next step.

(b) Operating state by axis

According to exercise from “Chapter 8.2.2 Current State Reading,” it is a signal of “Operating” for each axis. It turns on when it is operating. Operating Data Setting can not be configured while it is running hence configuration will only be configured when it is not running. If you execute Skip Operation while it is running, the “error 331” would be appeared.

(c) Error state for each axis

According to exercise from “Chapter 8.2.2 Current State Reading,” it is a signal of “Error state” for each axis. It turns on when an error occurred. Operation will only work when there is no error. If you want to operate a system regardless of errors, you can just inactivate the function.

(d) Address of Positioning Module

In this example, Positioning Module is installed at the 3 slot of 0 bases.

(e) Axis of command execution

You can set an axis for Parameter Setting. XGF series supports for 4 axes. In the “execution of axis” from the configuration of Parameter Setting, you can set a value for axis1 through axis4.

(f) State of Operation complete

If function block is completed without error, “1” will be outputted and maintain “1” until the next operation. If error occurred, “0” will be outputted.

(g) Error State

This is the area that output error no. if there are errors in operation of function block.

(h) For more information, reference of Skip Operation is in the “Chapter 9.5.3.”

(8) Continuous Operation

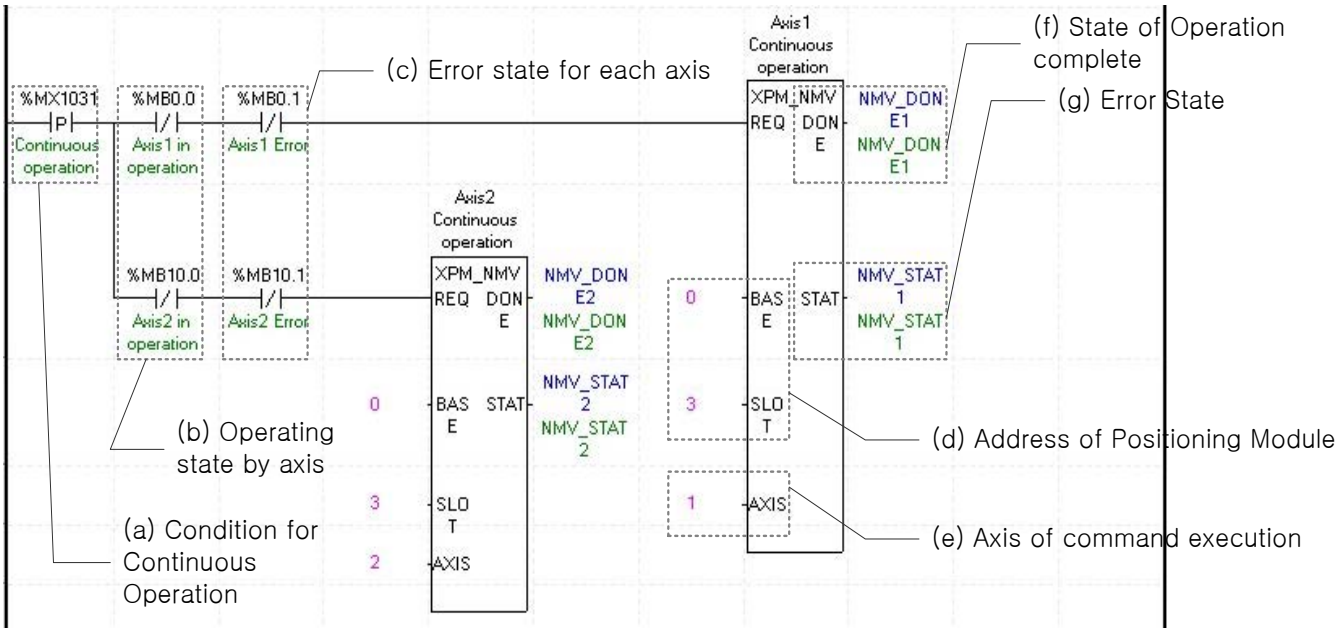

(a) This is the condition for Continuous Operation

This is the condition for Continuous Operation Command (XPM_NMV). Once Continuous Operation is executed, current operation step and next operation step would be operated continuously.

(b) Operating state by axis

According to exercise from “Chapter 8.2.2 Current State Reading,” it is a signal of “Operating” for each axis. It turns on when it is operating. Operating Data Setting can not be configured while it is running hence configuration will only be configured when it is not running. If you execute Continuous Operation while it is running, the “error 391” would be appeared.

(c) Error state for each axis

According to exercise from “Chapter 8.2.2 Current State Reading,” it is a signal of “Error state” for each axis. It turns on when an error occurred. Operation will only work when there is no error. If you want to

operate a system regardless of errors, you can just inactivate the function.

(d) Address of Positioning Module

In this example, Positioning Module is installed at the 3 slot of 0 bases.

(e) Axis of command execution

You can set an axis for Parameter Setting. XGF series supports for 4 axes. In the “execution of axis” from the configuration of Parameter Setting, you can set a value for axis1 through axis4.

(f) State of Operation complete

If function block is completed without error, “1” will be outputted and maintain “1” until the next operation. If error occurred, “0” will be outputted.

(g) Error State

This is the area that output error no. if there are errors in operation of function block.

(h) For more information, reference of Continuous Operation is in the “Chapter 9.5.2.”

(9) Current Step Change (Start Step Number Change)

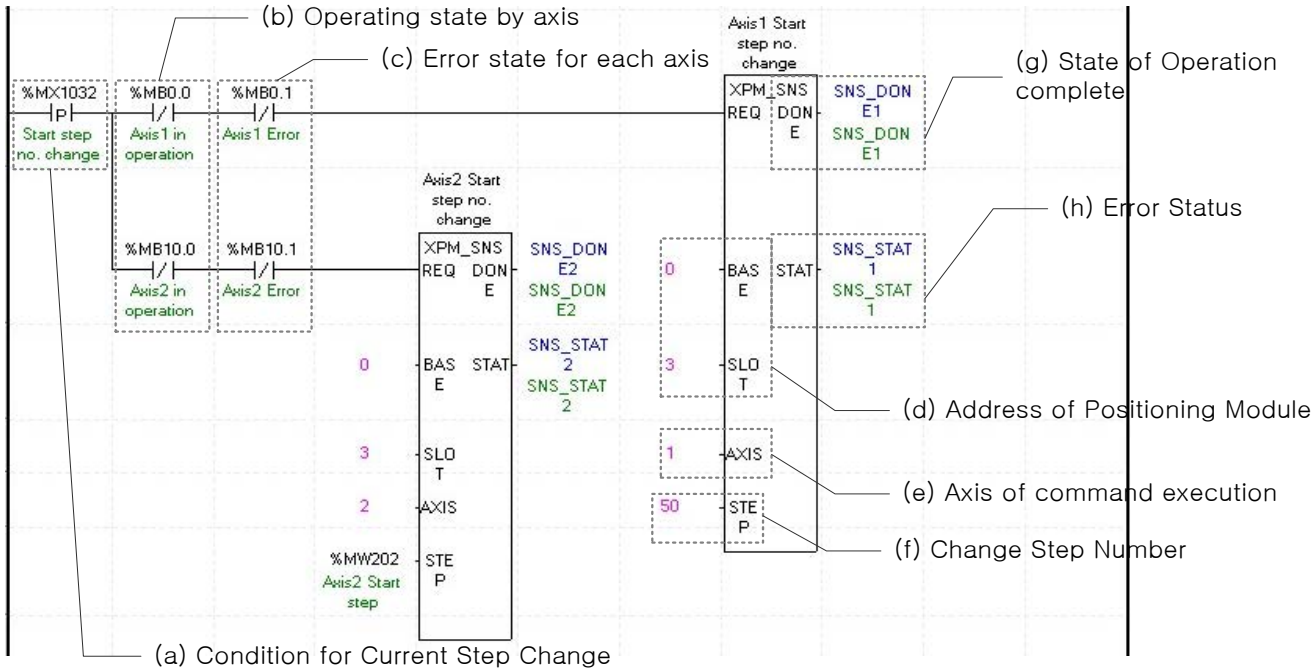

(a) This is the condition for Current Step Change

This is the condition for Current Step Change Command (XPM_SNS). Once Current Step Change is executed, current operation step will move set step.

(b) Operating state by axis

According to exercise from “Chapter 8.2.2 Current State Reading,” it is a signal of “Operating” for each axis. It turns on when it is operating. Operating Data Setting can not be configured while it is running hence configuration will only be configured when it is not running. If you execute Current Step Change while it is running, the “error 441” would be appeared.

(c) Error state for each axis

According to exercise from “Chapter 8.2.2 Current State Reading,” it is a signal of “Error state” for each axis. It turns on when an error occurred. Operation will only work when there is no error. If you want to operate a system regardless of errors, you can just inactivate the function.

(d) Address of Positioning Module

In this example, Positioning Module is installed at the 3 slot of 0 bases.

(e) Axis of command execution

You can set an axis for Parameter Setting. XGF series supports for 4 axes. In the “execution of axis” from the configuration of Parameter Setting, you can set a value for axis1 through axis4.

(f) Change Step Number

Set change step number by Current Step Change. XGF series support 400 step operation data for each Axis. Therefore, the range of step number setting of Current Step Change is 1~400.

(g) State of Operation complete

If function block is completed without error, “1” will be outputted and maintain “1” until the next operation. If error occurred, “0” will be outputted.

(h) Error State

This is the area that output error no. if there are errors in operation of function block.

(i) For more information, reference of Current Step Change is in the “Chapter 9.5.9.”

(10) Repeat Step No. Change

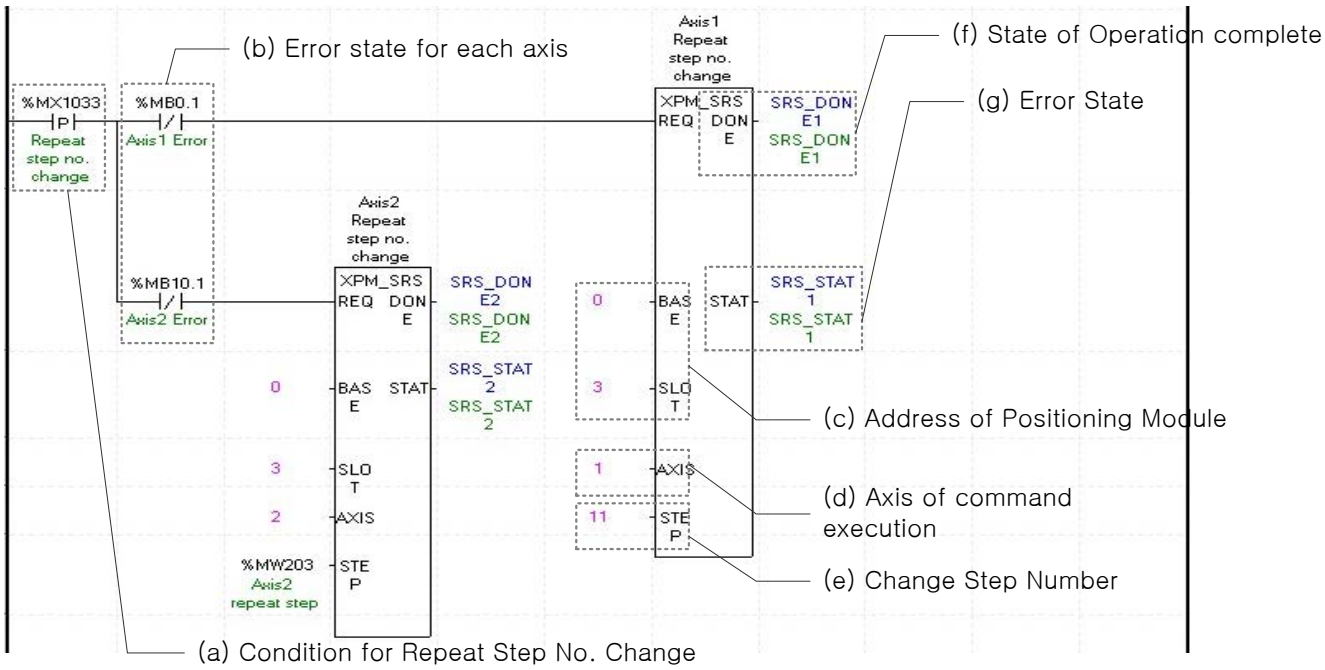

(a) This is the condition for Repeat Step No. Change

This is the condition for Repeat Step No. Change Command (XSRS). Once Repeat Step No. Change is executed, current operation step will move set step. It will execute a operation when set of Operation Method is “Repeat.”

(b) Error state for each axis

According to exercise from “Chapter 8.1.2 Current State Reading,” it is a signal of “Error state” for each axis. It turns on when an error occurred. Operation will only work when there is no error. If you want to operate a system regardless of errors, you can just inactivate the function.

(c) Address of Positioning Module

In this example, Positioning Module is installed at the 3 slot of 0 bases.

(d) Axis of command execution

You can set an axis for Parameter Setting. XGF series supports for 4 axes. In the “execution of axis” from the configuration of Parameter Setting, you can set a value for axis1 through axis4.

(e) Change Step Number

Set change step number by Current Step Change. XGF series support 400 step operation data for each Axis. Therefore, the range of step number setting of Current Step Change is 1~400. In the example, Axis1 and axis2 are changed to step no.11 and step no. saved in %MW203.

(f) State of Operation complete

If function block is completed without error, “1” will be outputted and maintain “1” until the next operation. If error occurred, “0” will be outputted.

(g) Error State

This is the area that output error no. if there are errors in operation of function block.

(h) For more information, reference of Repeat Step No. Change is in the “Chapter 9.5.10.”

(11) Current Position Preset

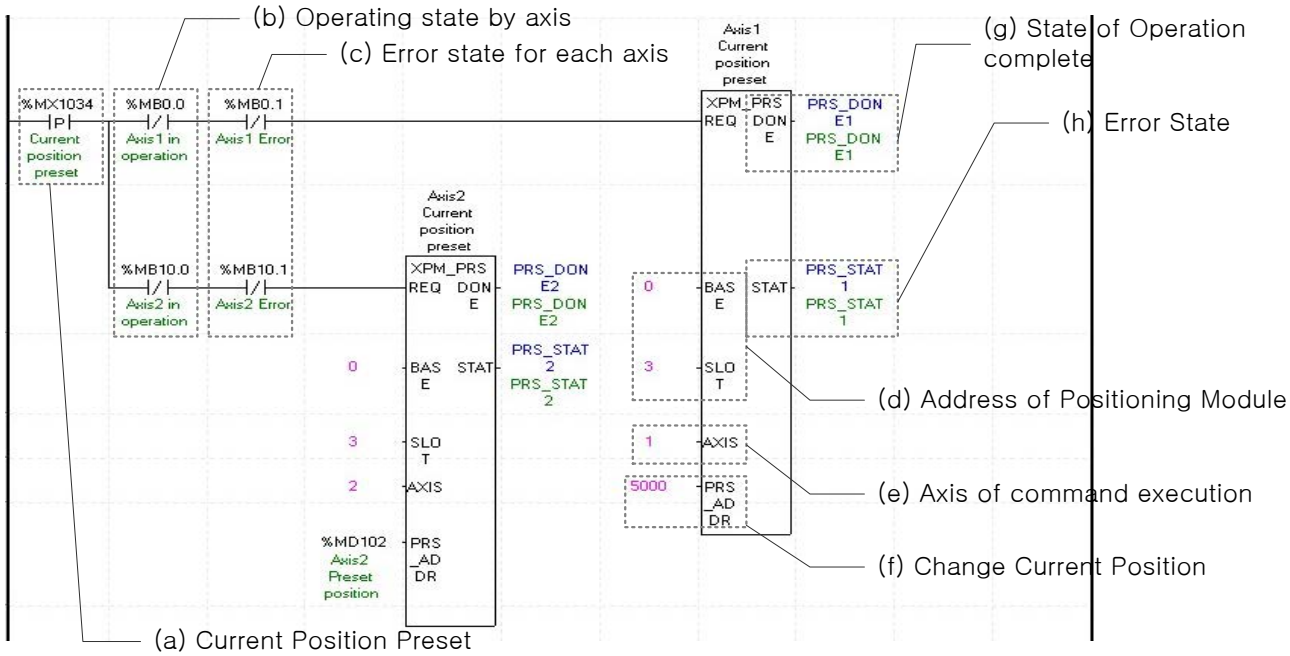

(a) This is the condition for Current Position Preset

This is the condition for Current Position Preset Command (XPM_SNS). Once Current Position Preset is executed, current operation step will move to set step. If the origin has not set yet, the origin would be set to origin decided.

(b) Operating state by axis

According to exercise from “Chapter 8.2.2 Current State Reading,” it is a signal of “Operating” for each axis. It turns on when it is operating. Operating Data Setting can not be configured while it is running hence configuration will only be configured when it is not running. If you execute Current Position Preset while it is running, the “error 451” would be appeared.

(c) Error state for each axis

According to exercise from “Chapter 8.2.2 Current State Reading,” it is a signal of “Error state” for each axis. It turns on when an error occurred. Operation will only work when there is no error. If you want to operate a system regardless of errors, you can just inactivate the function.

(d) Address of Positioning Module

In this example, Positioning Module is installed at the 3 slot of 0 bases.

(e) Axis of command execution

You can set an axis for Parameter Setting. XGF series supports for 4 axes. In the “execution of axis” from the configuration of Parameter Setting, you can set a value for axis1 through axis4.

(f) Change Current Position

Set change current position by Current Position Preset. Unit follows the value from “Unit” of basic parameter. In the example, Axis1 and axis2 are changed to 5000 and the position saved in %MD102.

(g) State of Operation complete

If function block is completed without error, “1” will be outputted and maintain “1” until the next operation. If error occurred, “0” will be outputted.

(h) Error State

This is the area that output error no. if there are errors in operation of function block.

(i) For more information, reference of Current Position Preset is in the “Chapter 9.5.7.”

(12) Encoder Preset

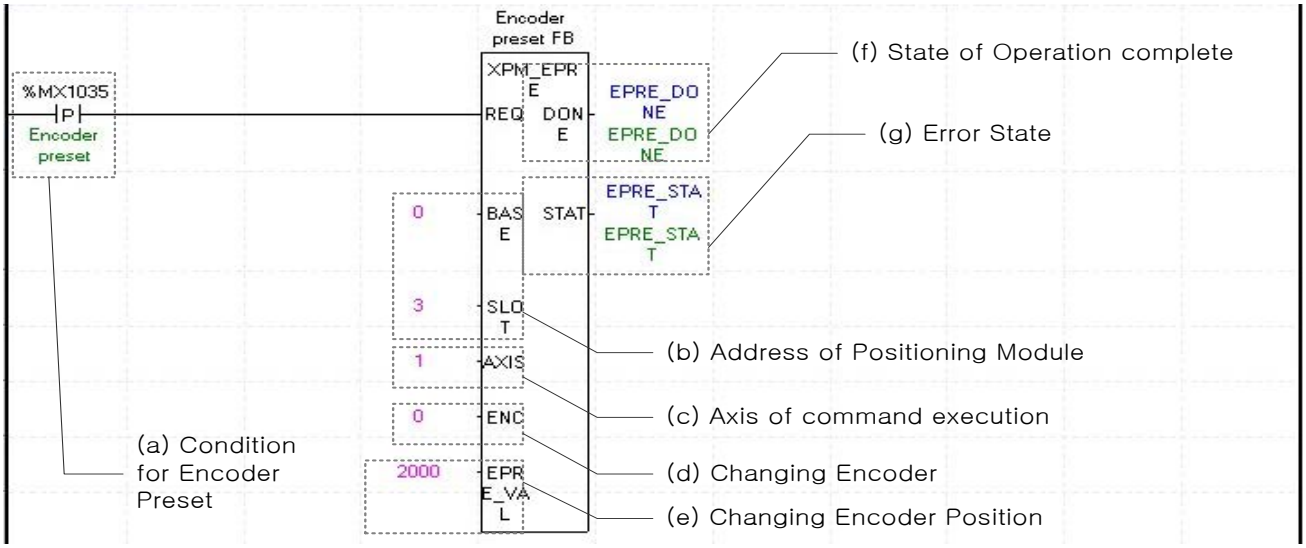

(a) This is the condition for Encoder Preset

This is the condition for Encoder Preset Command (XEPRS). Once Encoder Preset is executed, current operation step will move to set step.

(b) Address of Positioning Module

In this example, Positioning Module is installed at the 3 slot of 0 bases.

(c) Axis of command execution

You can set an axis for Parameter Setting. XGF series supports for 4 axes. In the “execution of axis” from the configuration of Parameter Setting, you can set a value for axis1 through axis4.

(d) Changing Encoder

Set Changing Encoder to execute a preset. XPM always be “0.”

(e) Changing Encoder Position

Set for Changing Encoder Position. In the example, the encoder position is changed to 2000.

(f) State of Operation complete

If function block is completed without error, “1” will be outputted and maintain “1” until the next operation. If error occurred, “0” will be outputted.

(g) Error State

This is the area that output error no. if there are errors in operation of function block.

(h) For more information, reference of Encoder Preset is in the “Chapter 9.5.8.”

8.2.7 Error

(1) Error Reset

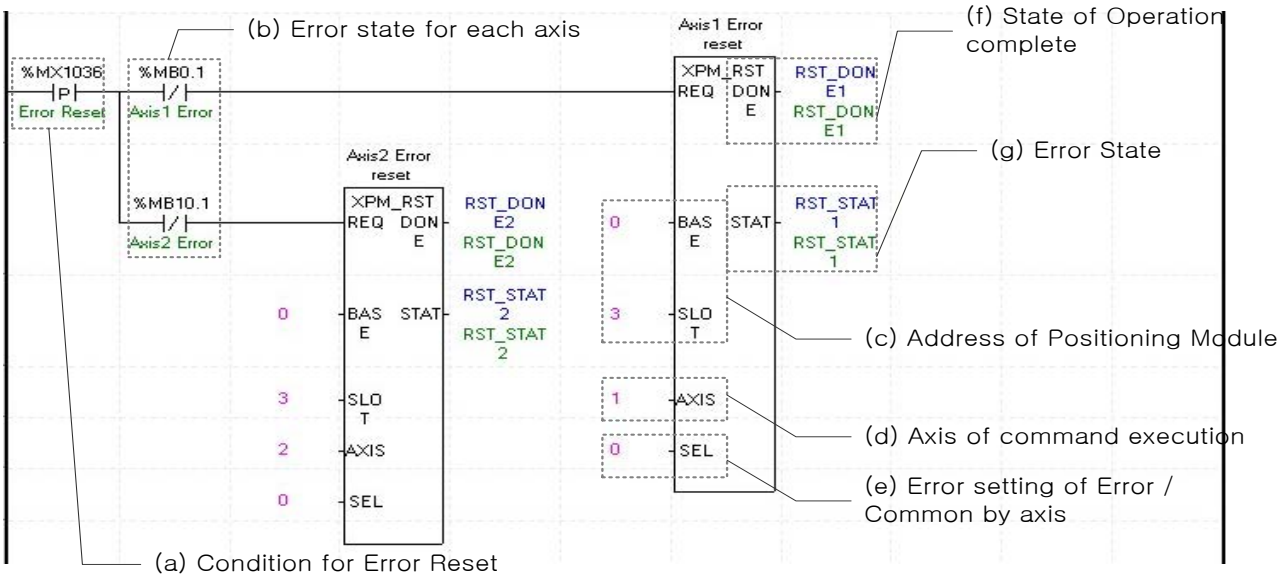

(a) This is the condition for Error Reset

This is the condition for Error Reset Command (XPM_RST). Once Error Reset is executed, it erases errors of module form each axis.

(b) Error state for each axis

According to exercise from “Chapter 8.2.2 Current State Reading,” it is a signal of “Error state” for each axis. It turns on when an error occurred. Operation will only work when there is no error. If you want to operate a system regardless of errors, you can just inactivate the function.

(c) Address of Positioning Module

In this example, Positioning Module is installed at the 3 slot of 0 bases.

(d) Axis of command execution

You can set an axis for Parameter Setting. XGF series supports for 4 axes. In the “execution of axis” from the configuration of Parameter Setting, you can set a value for axis1 through axis4.

(e) Error setting of Error/Common by axis

Depending on the errors, if it is set by “0”, erase the errors in operation of each axis, if it is set by “1”, erase the common errors of each modules.

(f) State of Operation complete

If function block is completed without error, “1” will be outputted and maintain “1” until the next operation. If error occurred, “0” will be outputted.

(g) Error State

This is the area that output error no. if there are errors in operation of function block.

(2) Error History Reset

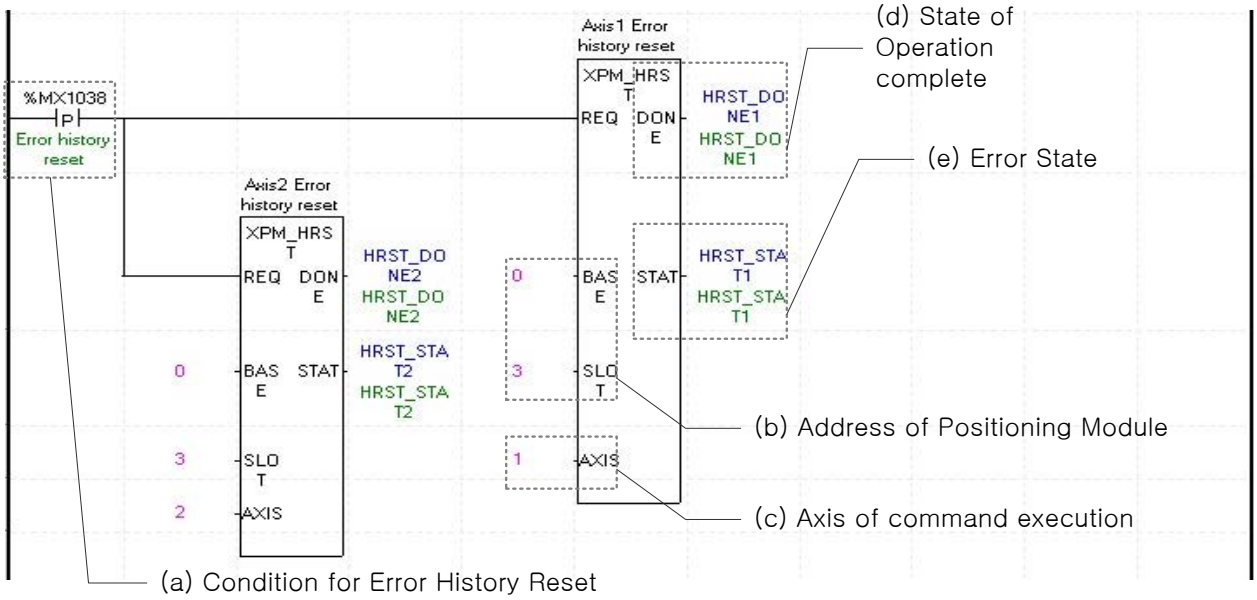

(a) This is the condition for Error History Reset

This is the condition for Error History Reset Command (XPM_HRST). Once Error Reset is executed, it erases history of generated errors of module. XGF series has ten error histories by each axis. It will be saved to FRAM, remain still even there is no power.

(b) Address of Positioning Module

In this example, Positioning Module is installed at the 3 slot of 0 bases.

(c) Axis of command execution

You can set an axis for Parameter Setting. XGF series supports for 4 axes. In the “execution of axis” from the configuration of Parameter Setting, you can set a value for axis1 through axis 4.

(d) State of Operation complete

If function block is completed without error, “1” will be outputted and maintain “1” until the next operation. If error occurred, “0” will be outputted.

(e) Error State

This is the area that output error no. if there are errors in operation of function block.

Chapter 9 Functions

9.1 Homing

Homing is carried out to confirm the origin of the machine when applying the power. In case of homing, it is required to set homing parameter per axis. If the origin position is determined by homing, the origin detection signal is not recognized during positioning operation.

9.1.1 Homing method

(1) By near point

(a) Origin detection after near point “Off”(0:)Near point/Origin (Off))

(b) Origin detection after deceleration when near point “On” (1: Near Point/Origin (On))

(c) Origin detection by near point (3: Near Point)

(2) By not using near point

(a) Origin detection by origin and high/low limit (2: High/Low limit/Origin)

(b) High speed origin detection (4: High speed origin)

(c) Origin detection by high/low limit (5: High/Low limit)

(d) Origin detection by origin (6: Origin)

※The items that effect to the homing from Software Package parameter are as follows.

9.1.2 Parameters for Homing

Position of Origin
Homing High Speed
Homing Low Speed
Homing acceleration time
Homing deceleration time
Homing dwell time
Homing reset waiting time
Origin compensation amount
Homing mode
Homing Direction

- For further information about homing parameters and setting value, please refer to Chapter 4.

9.1.3 Origin Detection after Near Point Off (0: Near point/Origin (Off))

This is the method using the near point and origin signal and the action by homing command is as follows.

(1) Operation

(a) It accelerates to the setting homing direction and acts by homing high speed.

(b) In this case, if near point signal is entered, it decelerates and acts by homing low speed.

(c) If origin signal is entered after the near point signal has changed from “On” to “Off”, the origin shall be determined and it stops.

■ Operating Pattern

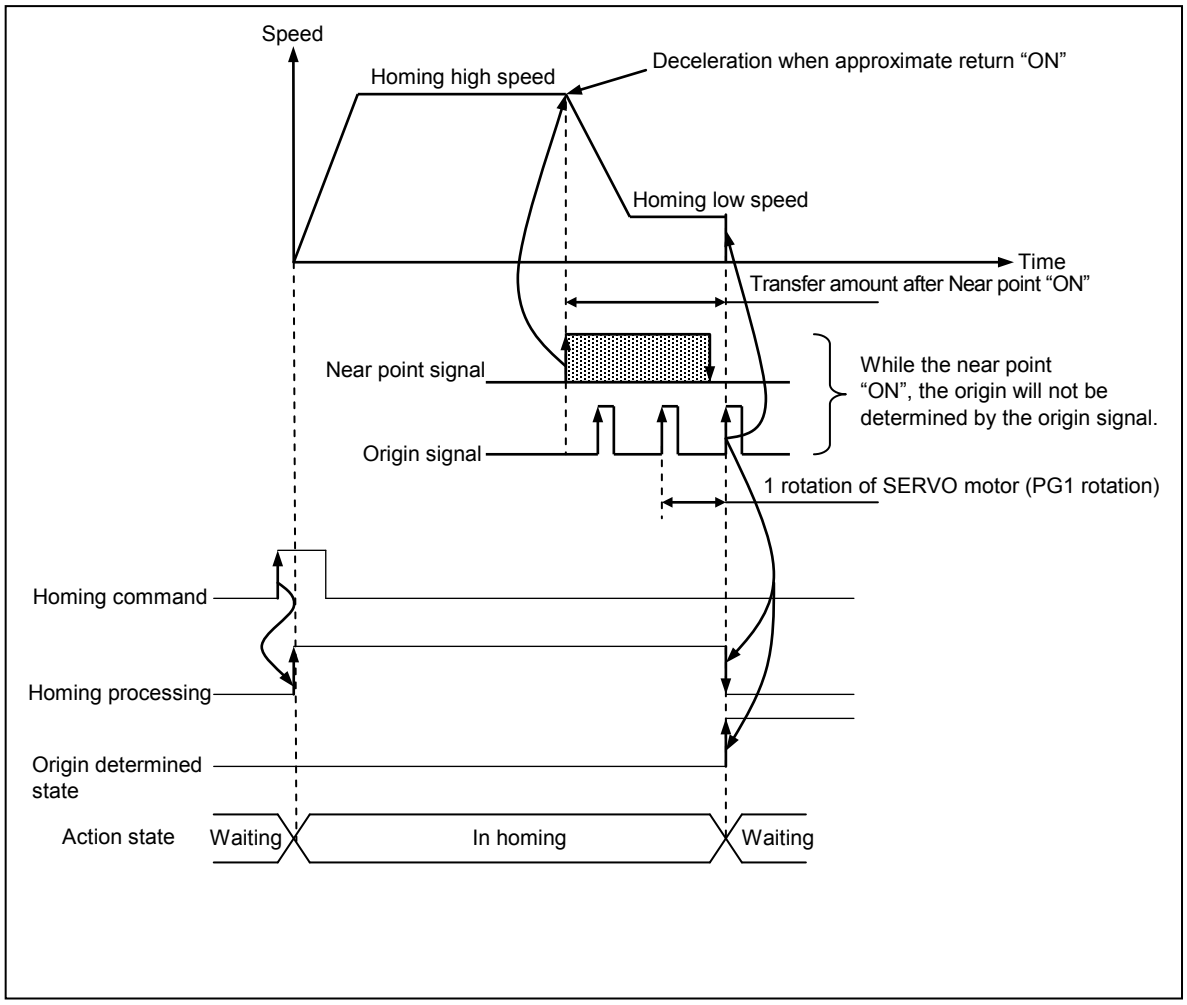

NOTE

1. While near point signal maintains “On”, the origin will not be determined by origin signal.
That is, when near point signal changes from “Off” to “On”(acceleration section -> homing high speed) , from “On” to “Off” (deceleration section -> homing low speed) and then when the origin changes from “Off” to “On”, the origin will be determined.

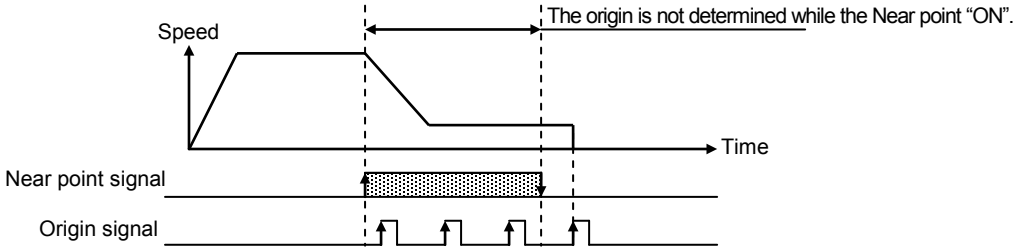

2. While the homing speed acts to the deceleration section by homing high speed after the near point signal is changed from “Off” to “On”, from “On” to “Off”, the origin will not be determined even if encounters the origin input.

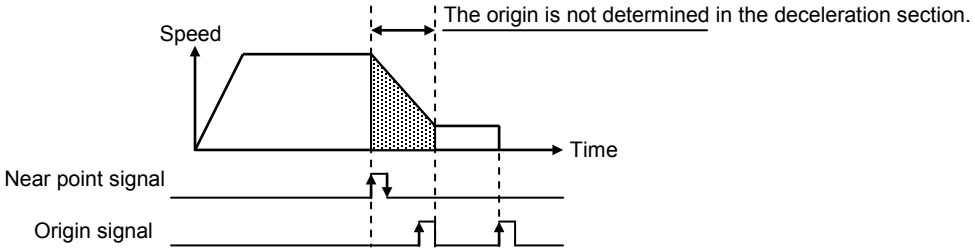

3. If the near point signal is changed from “Off” to “On”, from “On” to “Off” and encounters external high/low limit while waiting the origin input, the action is as follow.

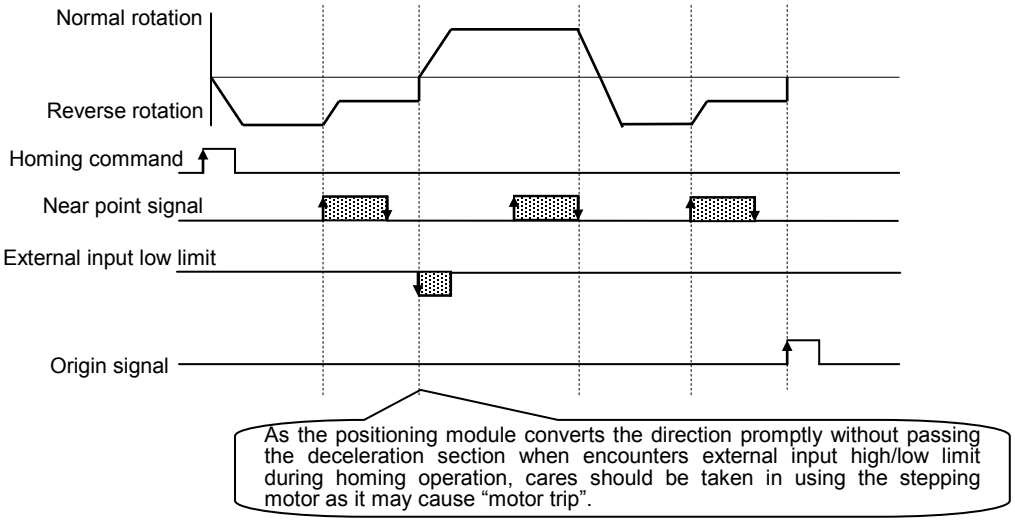

4. If “On” time of the origin is short, the positioning module can not recognize it.

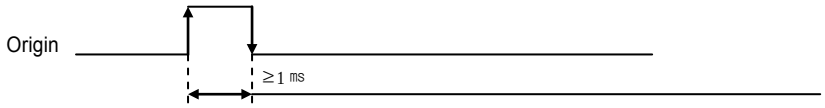

9.1.4 Origin Detection after Deceleration when Near Point On (1: Near Point/Origin (On))

This is the method using the near point and origin signal and the action by homing command is as follows.

(1) Operation

(a) It accelerates to the setting homing direction and acts by homing high speed.

(b) In this case, if near point signal is entered, it decelerates and acts by homing low speed.

(c) If encounters the origin signal as external input signal when the near point is "On" while the homing low speed is active, the origin shall be determined and it stops.

■ Operating Pattern

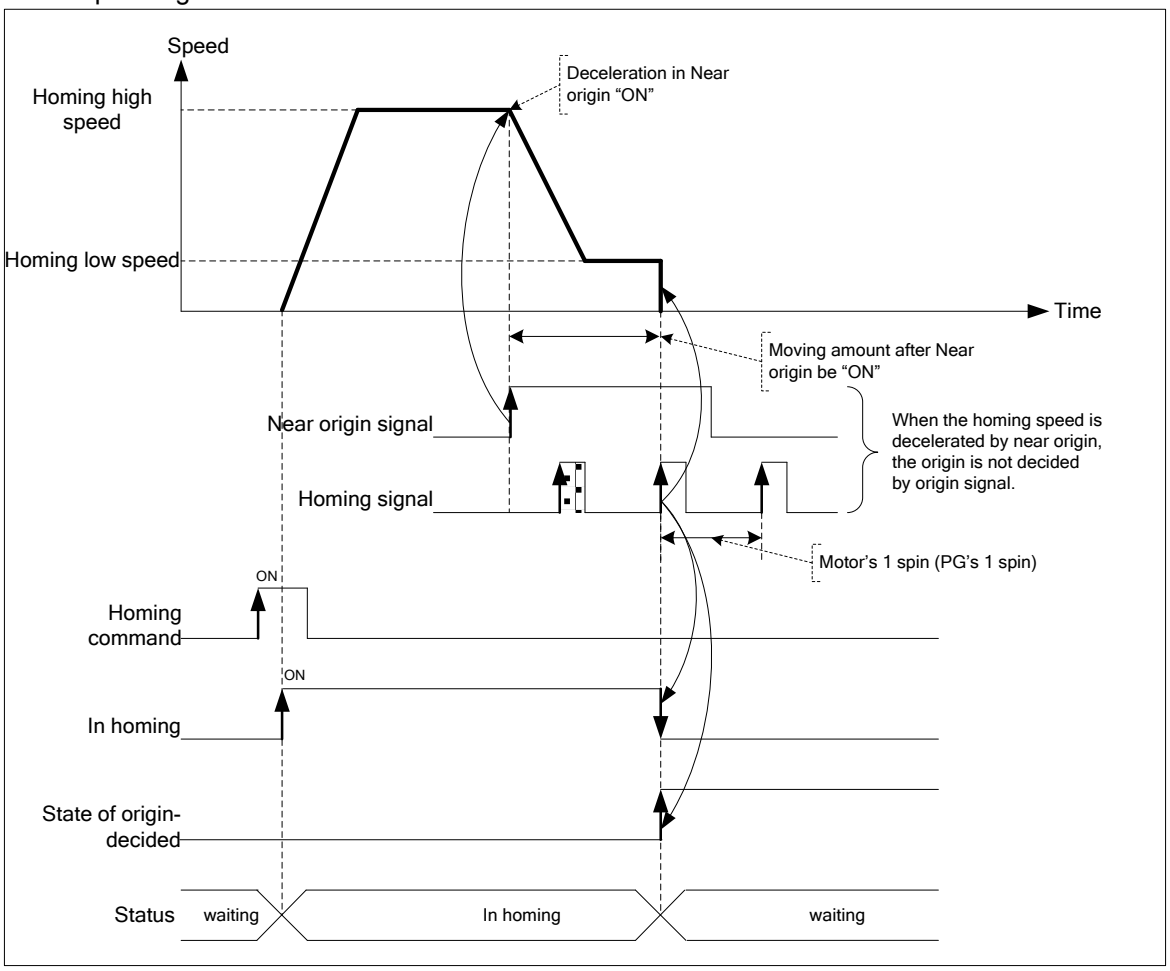

Note

(1) Once the near point signal is "On", when the homing speed acts from high speed to low speed via deceleration section, if the origin signal is entered in the state that the near point signal is "ON", the origin will be determined promptly.
That is, when the homing speed decelerates, the origin will not be determined by the origin signal.

(2) When encounters the external input high/low limit signal before origin after the near point signal has changed from "Off" to "On", the action will be the same as the method of Article 9.1.3

(3) If "On" time of origin signal is short, the positioning module can not recognize it.

9.1.5 Origin Detection by Origin and High/Low Limit (2: High/Low Limit/Origin)

This is the homing method using external input high/low signal and origin signal and is used in case of not using the near point signal.

(1) Operation

(a) It accelerates to the setting homing direction and acts by homing high speed.

(b) In this case, if High/Low signal is entered, it transferred to opposite direction and acts by homing low speed.

(c) If encounters the origin signals while the homing low speed is active, the origin would be determined and it stops.

■ Operating Pattern

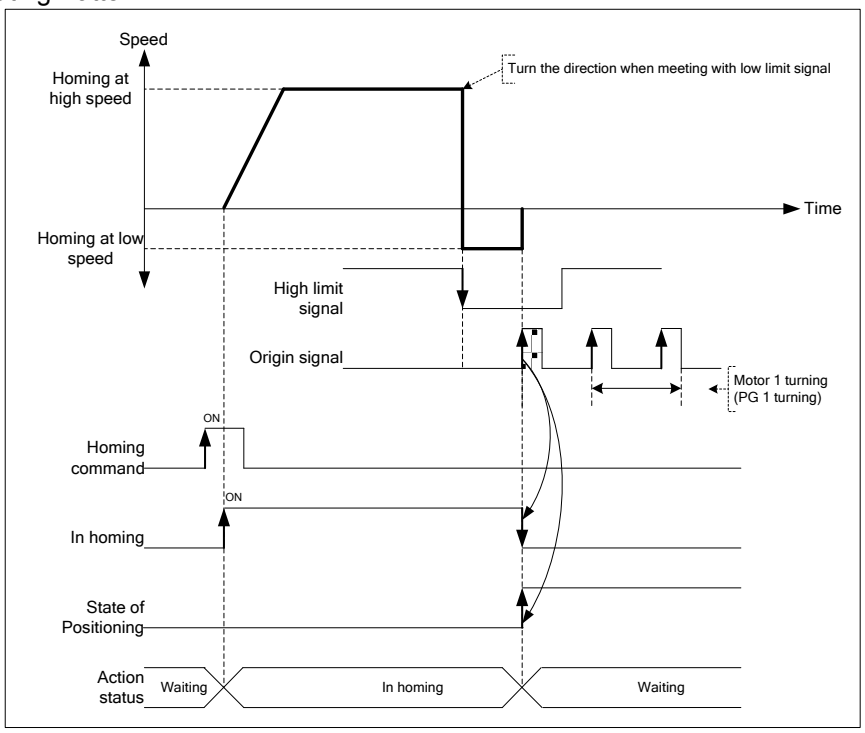

Note

In case that origin signal is “ON” before entering the external input high/low limit signal, it carries out the homing low speed operation when the external input high/low limit signal is entered and when origin signal is “ON”, the origin will be determined.

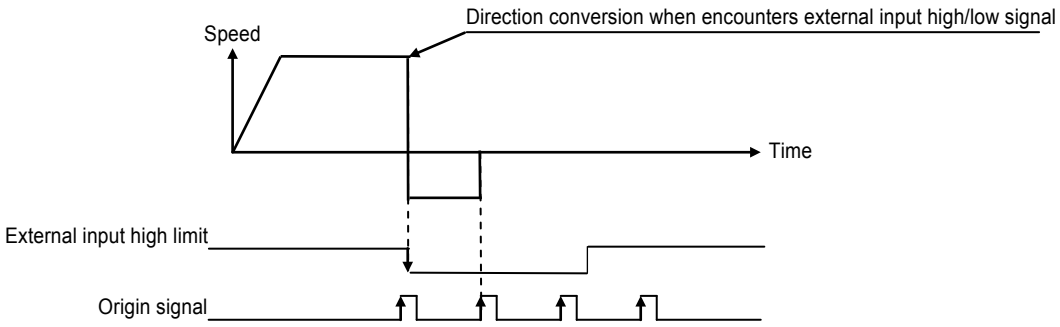

9.1.6 Origin Detection by Near Point (3: Near Point)

This is used when determines the origin only by using the near point.

(1) Operation

(a) It accelerates to the setting homing direction and acts by homing high speed.

(b) In this case, if near point signal is entered, it decelerates and transferred to opposite direction acts by homing high speed.

(c) When it operates in opposite direction, if near point is entered, it decelerates and transferred to opposite direction and acts by homing low speed.

(d) In this case, if encounters Near point origin signal, the origin would be determined and it stops.

■ Operating Pattern

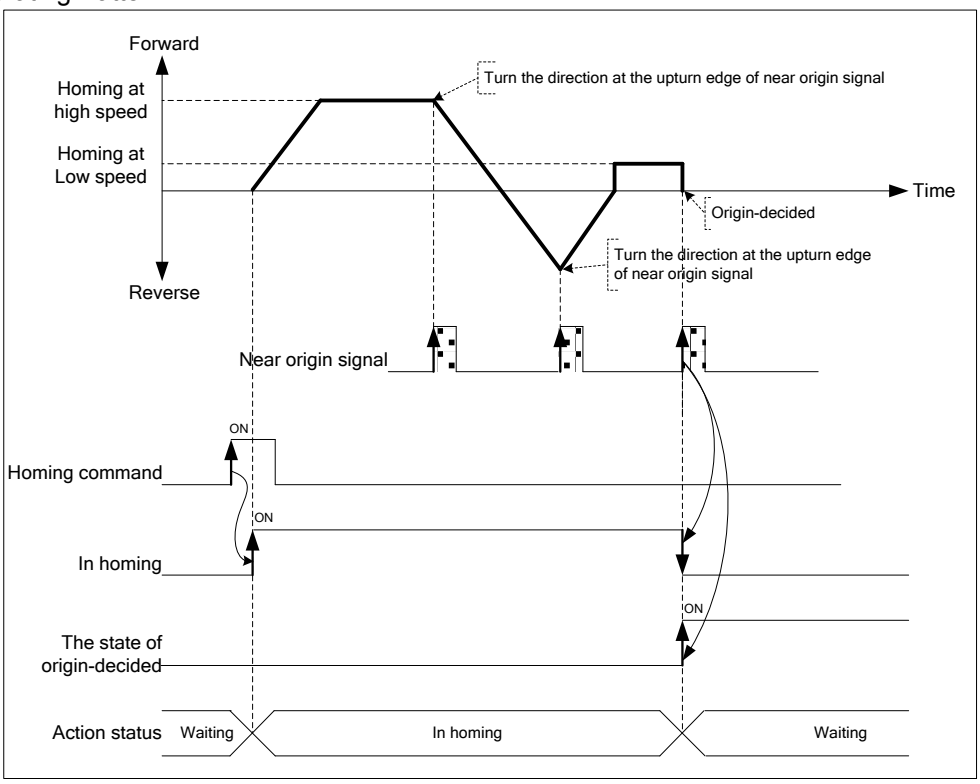

Note

If "ON" time of near point is longer than deceleration time, the action is as follows.

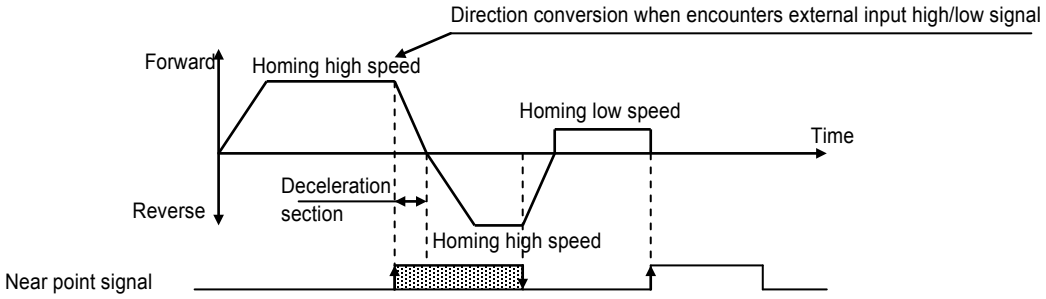

9.1.7 High Speed Homing (4: High Speed Origin)

High speed origin detection is one of the homing methods that returns to the origin determination position without detection of external signal (near point, origin signal, High/Low limit) when returning to the mechanical origin position after completion of the mechanical homing.

(1) Operation

(a) Once Homing command executes, it operates positioning with high speed and homing from current position

(b) When using High speed homing, it should be carried out in the state that the positioning by 6 types of mechanical homing, by floating origin, or by the current position preset is completed in advance.

■ Operating Pattern

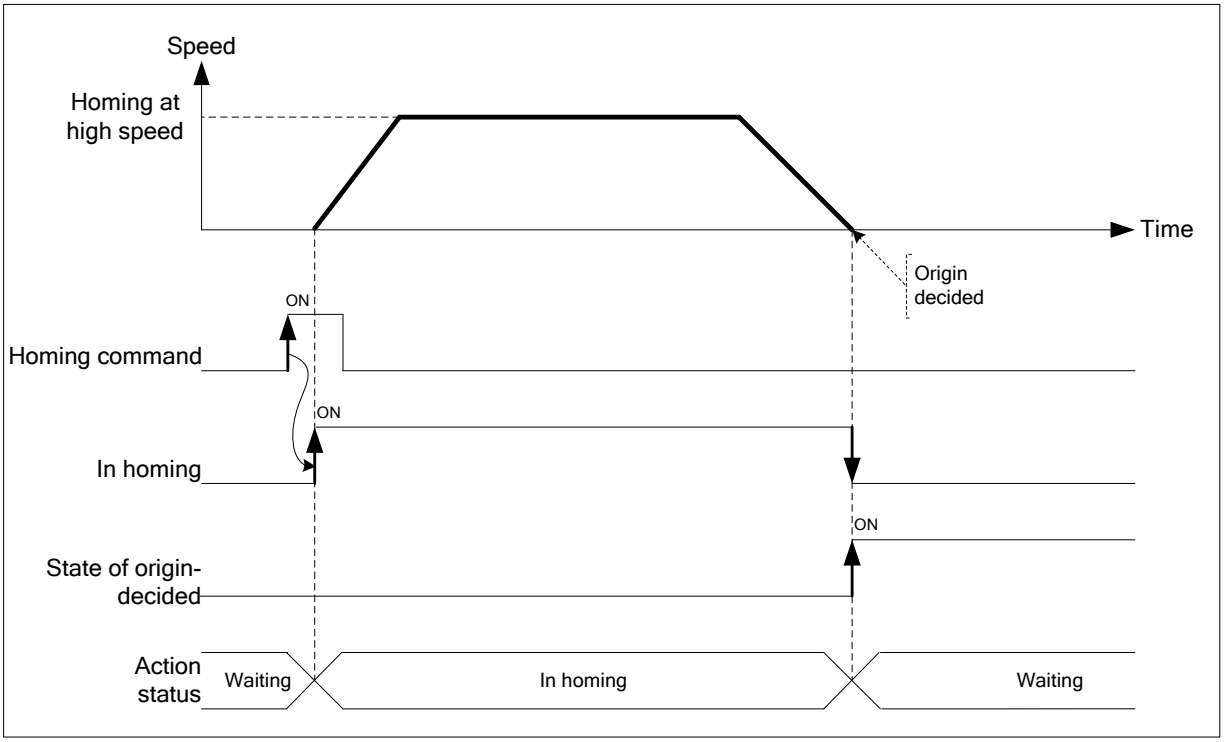

9.1.8 Origin Detection by High/Low Limit (5: High/Low Limit)

This is the homing method using the external input high/low limit signal and is used when not using the origin or near point signal.

(1) Operation

(a) It accelerates to the setting homing direction and acts by homing high speed.

(b) In this case, if High/Low limit signal is entered, it transferred to opposite direction and acts by homing low speed.

(c) If encounters the origin signals while the homing low speed is active, the origin would be determined and it stops.

■ Operating Pattern

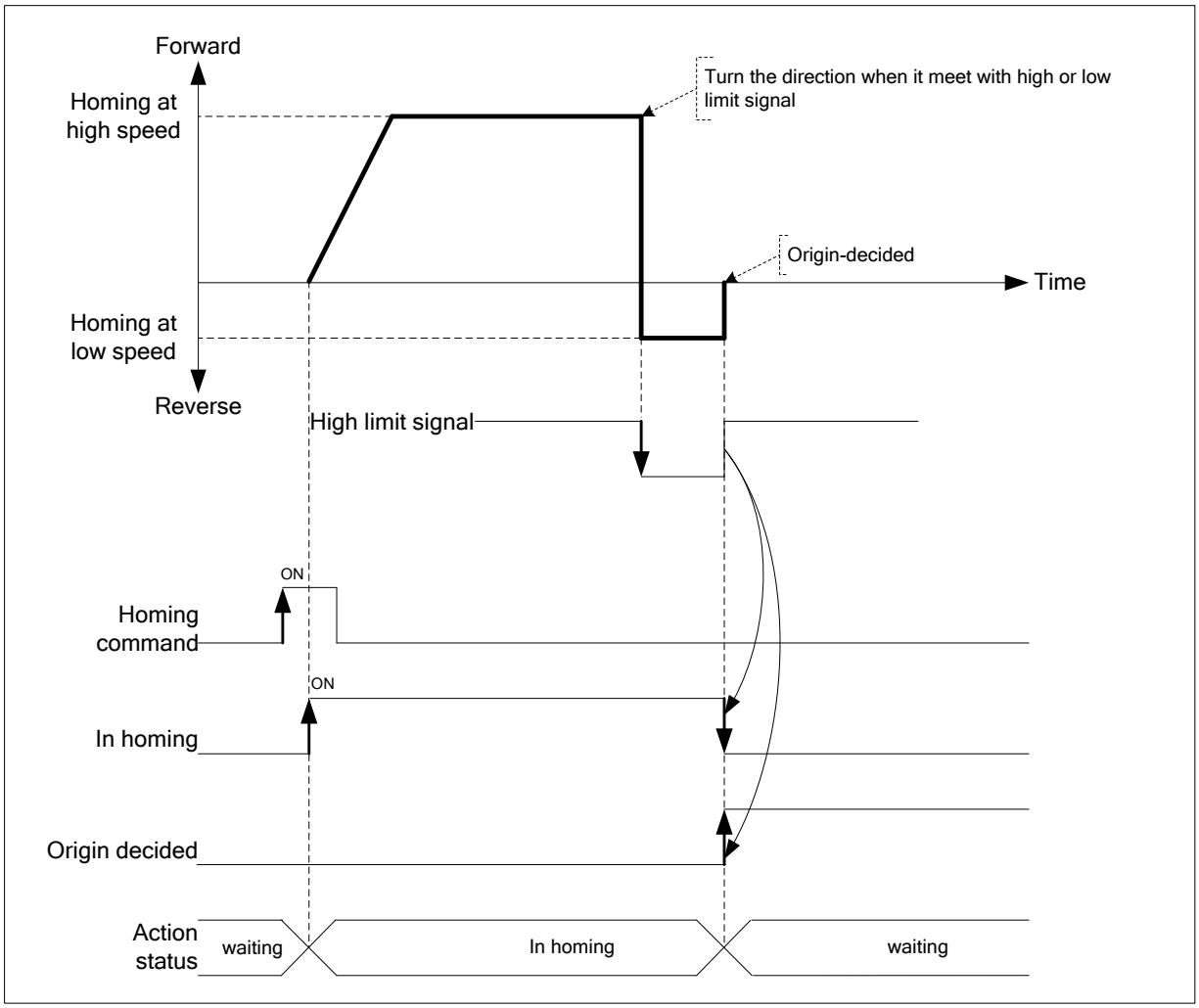

9.1.9 Origin Detection by Origin (6: Origin)

This is used when determines the origin only by using the near point.

(1) Operation

(a) It accelerates to the setting homing direction and acts by homing high speed.

(b) In this case, if origin signal is entered, it decelerates and transferred to opposite direction acts by homing high speed.

(c) When it operates in opposite direction, if origin signal is entered, it decelerates and transferred to opposite direction and acts by homing low speed.

(d) If encounters the origin signals, the origin would be determined and it stops.

■ Operating Pattern

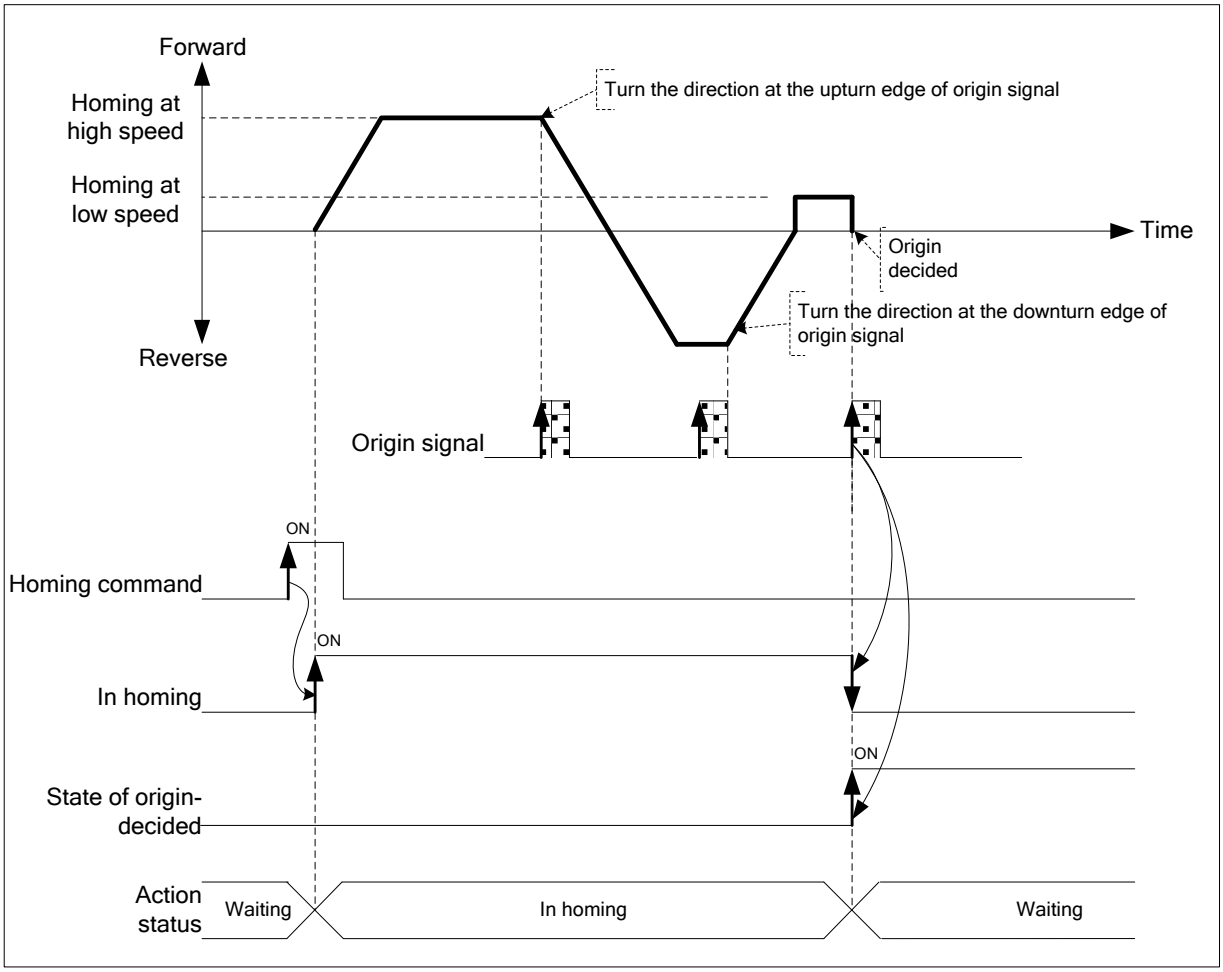

Note

1. If “ON” time of near point is longer than deceleration time, the action is as follows.

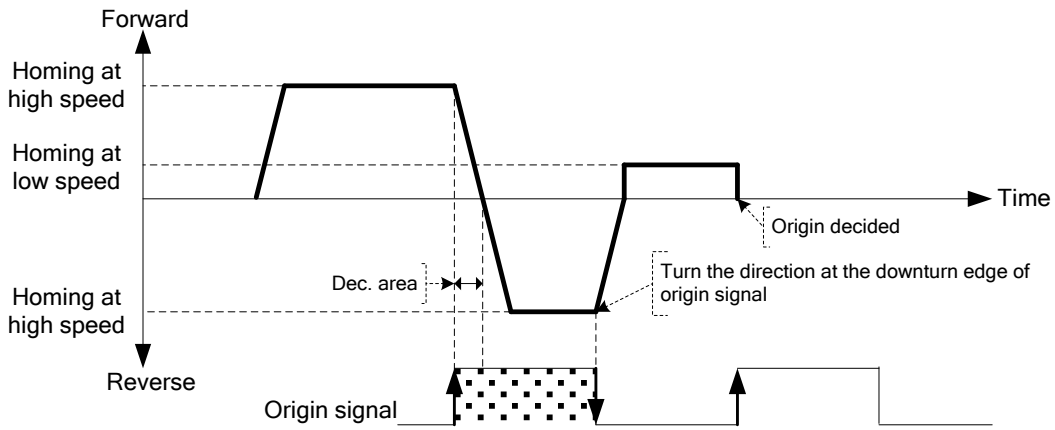

2. Act as follows if become acquainted low limit (if starting point return direction is forward upper limit) signal before become acquainted starting point among driving signal to starting point return backward.

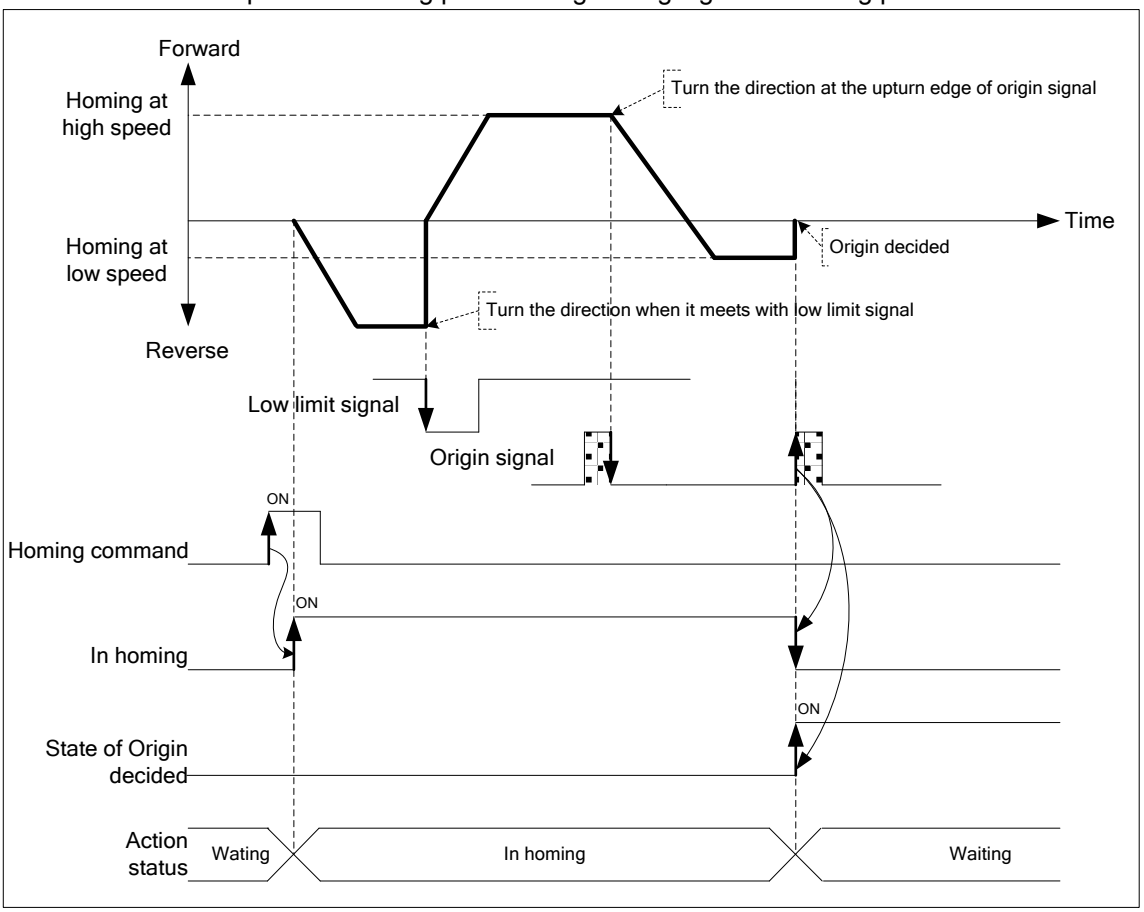

9.2 Positioning Control

Positioning control execute using data which set on the 「Operation Data」. Positioning Control includes Single-axis Position control, Single-axis Speed Control, Single-axis Feed Control, Interpolation control, Speed/Position Switching control, Position/Speed Switching control and Position/Torque Switching control.

Positioning Control		Control Method	Operation
Positioning Control	Single-axis Position Control	Absolute, Single-axis Position Control Relative, Single-axis Position Control	Specified axis executes positioning control from the beginning (current stop position) to the goal position.
	Single-axis Feed Control	Absolute, Single-axis Feed Control Relative, Single-axis Feed Control	The starting position (the current stop position), changes to 0 and executes positioning control as much as setting amount of movement.
	Linear Interpolation	Absolute, Linear Interpolation Relative, Linear Interpolation	Executing linear interpolation control by using starting address (current stop position) from the axis (2 axes or more) to the target position.
	Circular Interpolation	Absolute, Circular Interpolation Relative, Circular Interpolation	Execute positioning control until goal position by the trajectory of arc and control sub-axis as using axis-2 according to data of main axis.
	Helical Interpolation		Set by helical interpolation axis, execute linear interpolation control until goal position by the trajectory of arc and control sub-axis as using axis-3 according to data of main axis.
	Ellipse Interpolation		Execute positioning control until goal position by trajectory angle of the ellipse is set to operate and control sub-axis as using axis- 2 according to data of main axis.
Speed Control		Absolute, Single-axis Speed Control Relative, Single-axis Speed Control	Execute Speed control as setting speed until deceleration stop command is entered.
Speed/Position Switching Control		Absolute, Single-axis Speed Control Relative, Single-axis Speed Control	Speed controlling and then speed / position switching command or speed / position control switching input signal is entered, speed control switch to position control and execute positioning control as much as target position.
Position/Speed Switching Control		Absolute, Single-axis Position Control Relative, single-axis Position Control	Position controlling and then position / speed switching command is executed, position control switch to speed control and execute speed control as setting speed until deceleration stop command is entered.

9.2.1 Operation Data for Positioning Control

Describe the Operation data and Setting to execute positioning control.

Operation Data	Setting
Control Method	Set the Type of control and Standard coordinates of Positioning control.
Operation Method	Set the control method of continuous operation data.
Goal Position	Set the absolute target position or distance of positioning control.
Operation Speed	Set the value of operation speed during operation control.
Acceleration Number	Set the operation number of operation control during acceleration time. Acceleration Number is selected from basic parameters which are Acceleration Number1, 2, 3, and 4.
Deceleration Number	Set the operation number of operation control during deceleration time. Deceleration Number is selected from basic parameters which are Deceleration Number1, 2, 3, and 4.
M Code	Set the M Code when using the code number for sub operation of positioning control.
Dwell Time	After complete the positioning control, set the time until servo drive complete positioning control.
Sub Axis Setting	Set the sub axis during interpolation control.
Circular Interpolation	Set the secondary data (middle point, center point and radius) during circular interpolation.
Circular Interpolation Mode	Set the generating method of arc (middle point, center point and radius) during circular interpolation.
Circular Interpolation Turn Number	Set the number of arcs to draw during circular interpolation.
Helical Interpolation	Set the axis to run linear operation during helical interpolation.

Note

It is available to set the operation data each of 1~400 steps and axis1~4.

9.2.2 Operation mode of Positioning Control

Operation mode describes various configurations for how to operate the positioning data using several operation step no. and how to determine the speed of position data.
Operation mode types are as follows.

Control Method	Operation Method	Operation Pattern		Operation
Shortened Positioning Control	Single	End	○	Terminated after the completion of the current step position control
		Go-on	○	Continue to the next step after the completion of the current step position control
		Continuous	○	The current step and the next step in a continuous drive speed
	Repeat	End	○	Repeat the step after the completion of the current step position control to change the step number
		Go-on	○	Repeat the step after the completion of the current step position control continues to drive
		Continuous	○	Repeat the step and the successive steps in the current driving speed
Shortened Speed Control	Single	End	○	Speed control drive of the driving data to the current step
		Go-on	○	Speed control drive of the driving data to the current step After completing the following steps VTP control orders continue to drive location
		Continuous	X	Errors
	Repeat	End	○	Speed control drive of the driving data to the current step
		Go-on	○	Speed control drive of the driving data to the current step Repeat the step after the completion of location control, VTP orders continue to drive
		Continuous	X	Errors
Shortened FEED Control	Single	End	○	Terminated after the completion of the current step-feed control
		Go-on	○	The next step after the completion of the staff continue to drive the feed control
		Continuous	X	Errors
	Repeat	End	○	Step by step, repeat the steps after the completion of the feed control change number
		Go-on	○	Repeat the step after the completion of the current staff, continue to drive the feed control
		Continuous	X	Errors
Linear Interpolation	Single	End	○	Terminated after the completion of the current step-linear interpolation
		Go-on	○	The next step after the completion of the staff continue to drive a straight line interpolation
		Continuous	○	The current step and the next step in a continuous straight line speed interpolation driving
	Repeat	End	○	Repeat the step after the completion of the current staff, continue to drive a straight line interpolation
		Go-on	○	Repeat the current step and the successive steps to speed linear interpolation driving
		Continuous	○	The current step and the next step in a continuous arc interpolation drive speed
Circular Interpolation	Single	End	○	After completing the current step termination arc interpolation
		Go-on	○	The next step after the completion of the staff continue to drive the arc interpolation
		Continuous	○	The current step and the next step in a continuous arc interpolation drive speed
	Single	End	○	Repeat the step after the completion of the current staff, continue to drive the arc interpolation
		Go-on	○	Repeat the step and the successive steps in the current arc interpolation drive speed
		Continuous	○	The current step and the next step in a continuous arc interpolation drive speed

Note

1, Operation mode shall be set from PLC Program or Operation data of XG-PM.

2. Operation data can be set up to 400 from operation step no. 1 ~ 400 at each axis.

3. With one time start command, positioning operation method by one operation step positioning data and positioning operation method by several operation step in order shall be determined by operation mode of each positioning data set by the operator.

(1) End Operation (Single)

(a) With one time start command, the positioning to the goal position is executed and the positioning shall be completed at the same time as the dwell time proceeds.

(b) The positioning completion of this operation mode can be used as operation mode of last positioning data of Go-on operation mode and Continuous operation mode.

(c) Operation direction shall be determined by the value of address.

(d) Operation action is trapezoid type operation that has acceleration, constant, deceleration section according to the setting speed and position data but the operation pattern according to the setting value is as follows.

1) Normal Operation Patterns

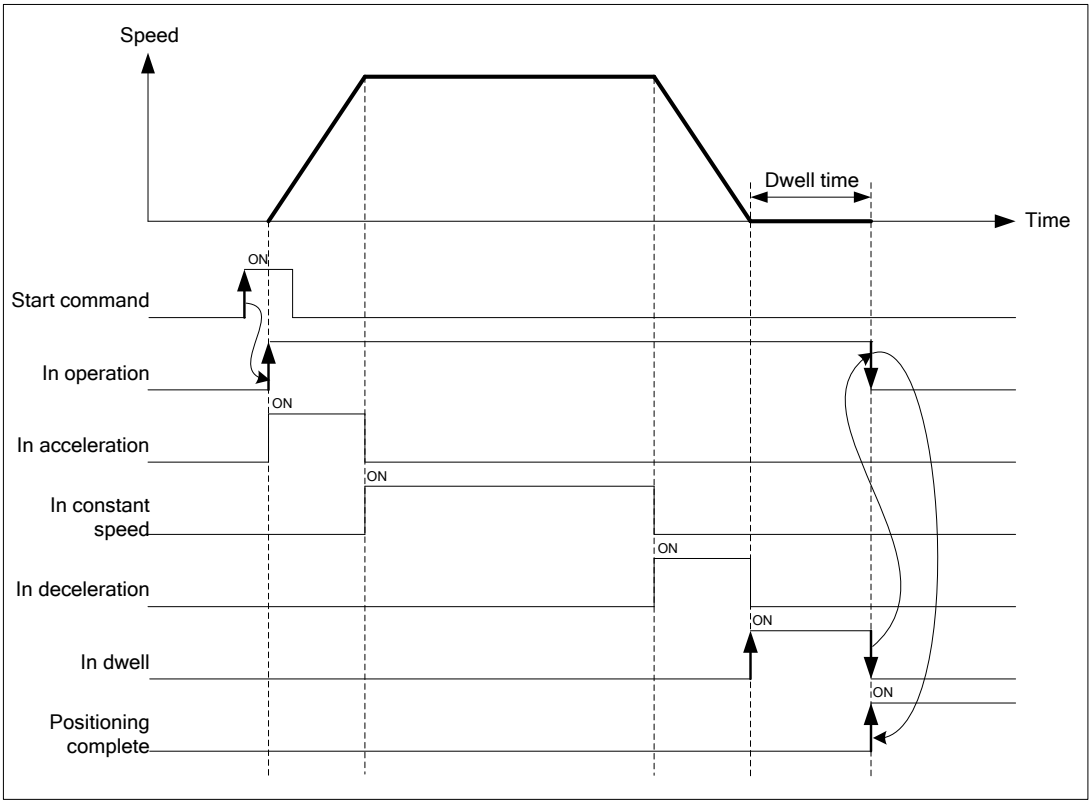

2) Abnormal Operation Patterns

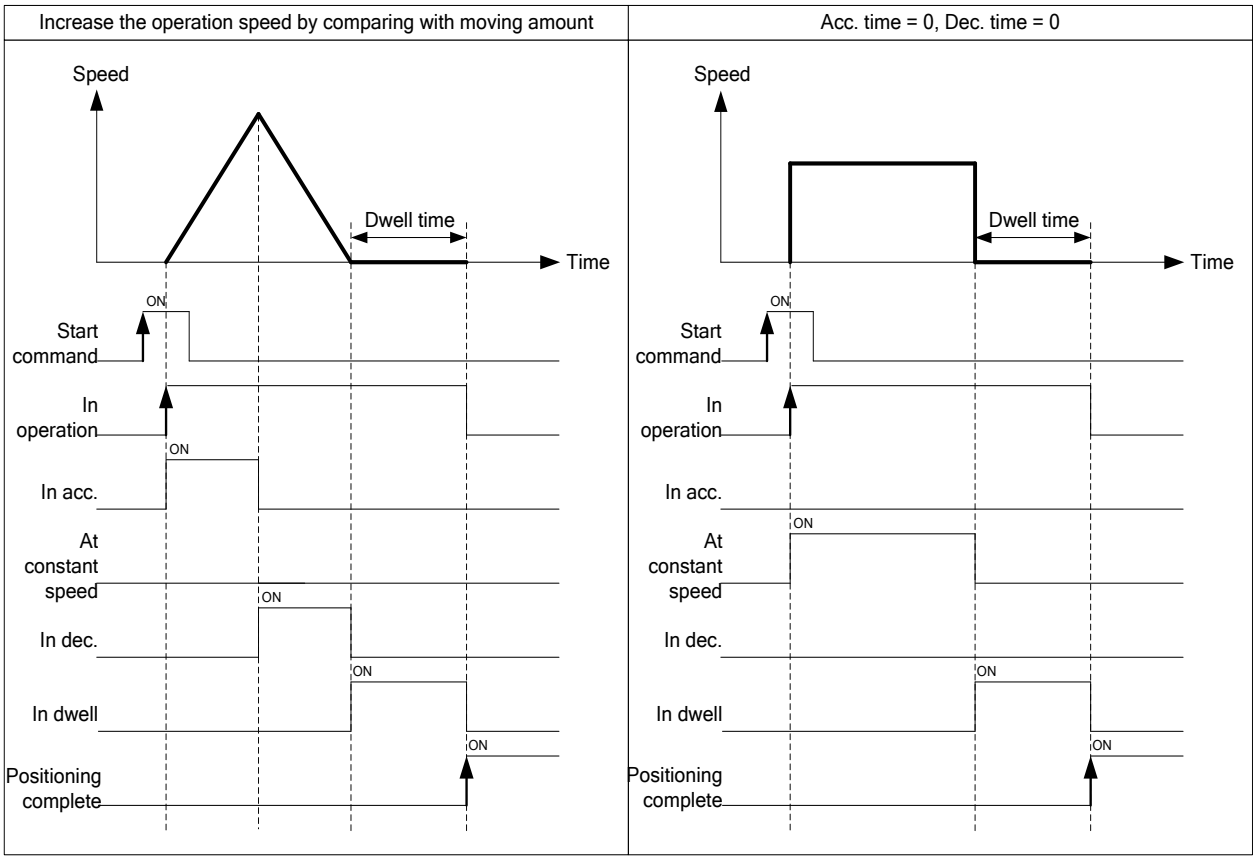

[Example] - When operating only by Start Command [when setting the step no. as “0” by indirect start

- Starting command execute total four times.

■ Setting of XG-PM

Step NO.	Control Method	Operation Method	Goal Position [pls]	Operation Speed [pls/s]	Accel NO.	Decel NO.	M Code	Dwell Time
1	Absolute Single-axis Positioning Control	Single, End	10000	1000	Once	Once	0	0
2	Absolute Single-axis Positioning Control	Single, End	15000	500	Once	Once	0	0
3	Absolute Single-axis Positioning Control	Single, End	25000	1000	Once	Once	0	0
4	Absolute Single-axis Positioning Control	Single, End	30000	500	Once	Once	0	0

■ Operation Pattern

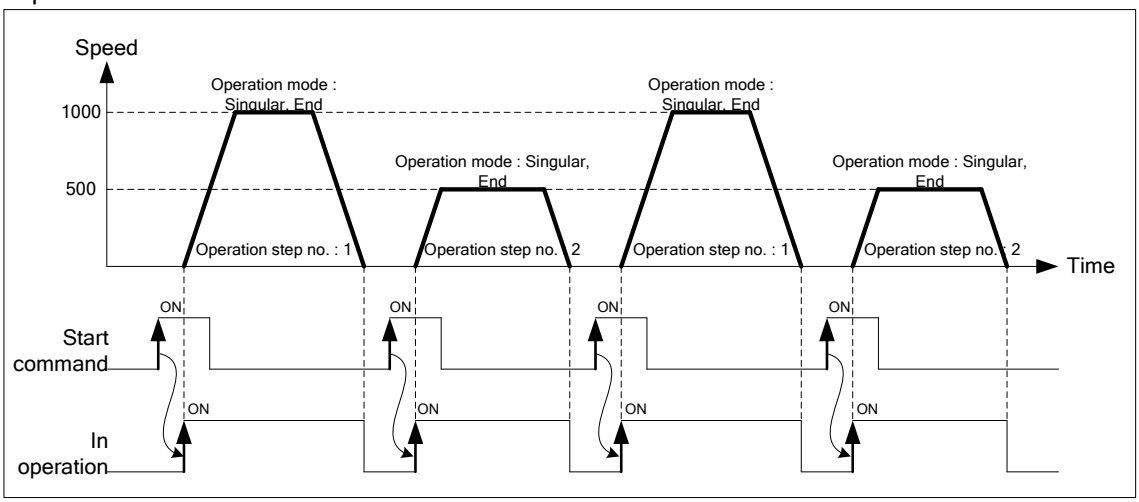

Operating step that execute according to starting command order will be [1] → [2] → [3] → [4].

(2) End Operation (Repeat)

(a) With one time start command [APM_IST: rising edge ↑], the positioning to the goal position is executed and the positioning shall be completed at the same time as the dwell time proceeds.

(b) The operation type of Repeat operation mode is same as that of Single operation but the different thing is to determine next operation by operation step no. assigned by repeat step no. change command after positioning completion of Repeat operation mode.

(c) Therefore, if Repeat step no. change command was not executed, the step no.“1” shall be assigned after positioning completion of Repeat operation mode and operated at next Start command. Thus, this operation can be used for the structure that several operation steps are repeated.

(d) In case that operation step is set as the value except “0” (1~400) for Indirect Start, the positioning operation shall be done with the setting step no. regardless of the current operation step no. But, if the step no. is set as “0”, the positioning operation shall be done with the current step no. changed by Repeat operation mode.

(e) Operation direction shall be determined by position address.

(f) Repeat operation step no. change command is available to execute during operation.

[Example 1] - When operating only by Start Command [when setting the step no. as “0” by indirect start

- Starting command execute total four times.

■ Setting of XG-PM

Step NO.	Control Method	Operation Method	Goal Position [pls]	Operation Speed [pls/s]	Accel NO.	Decel NO.	M Code	Dwell Time
1	Absolute Single-axis Positioning Control	Single, End	10000	1000	Once	Once	0	0
2	Absolute Single-axis Positioning Control	Repeat, End	15000	500	Once	Once	0	0
3	Absolute Single-axis Positioning Control	Single, End	25000	1000	Once	Once	0	0
4	Absolute Single-axis Positioning Control	Repeat, End	30000	500	Once	Once	0	0

■ Operation Pattern

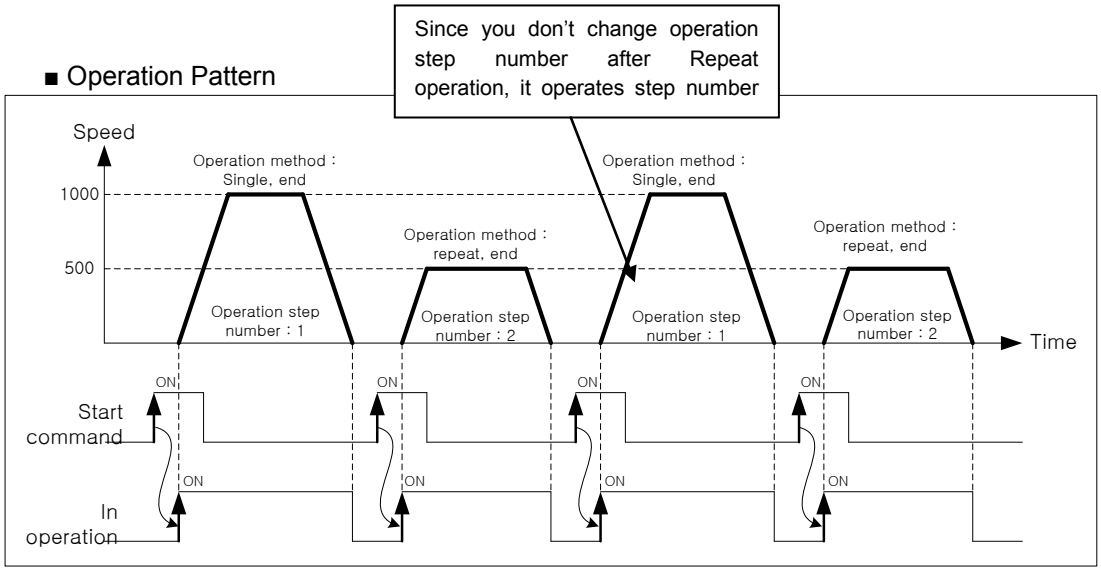

Operating step that execute according to starting command will be [1] → [2] → [1] → [2].

Operating step 3, 4 will not execute.

[Example 2] When operating by Start command and Repeat operation step no. assignment

- Setting the step no. as “0” by indirect start
- After the first starting command, change repeat operation step number as “3” by 「Change repeat step number」 command.
- Execute starting command 3 times more.

■ Setting of XG-PM

Step NO.	Control Method	Operation Method	Goal Position [pls]	Operation Speed [pls/s]	Accel NO.	Decel NO.	M Code	Dwell Time
1	Absolute Single-axis Positioning Control	Single, End	10000	1000	Once	Once	0	0
2	Absolute Single-axis Positioning Control	Repeat, End	15000	500	Once	Once	0	0
3	Absolute Single-axis Positioning Control	Single, End	25000	1000	Once	Once	0	0
4	Absolute Single-axis Positioning Control	Repeat, End	30000	500	Once	Once	0	0

■ Operation Pattern

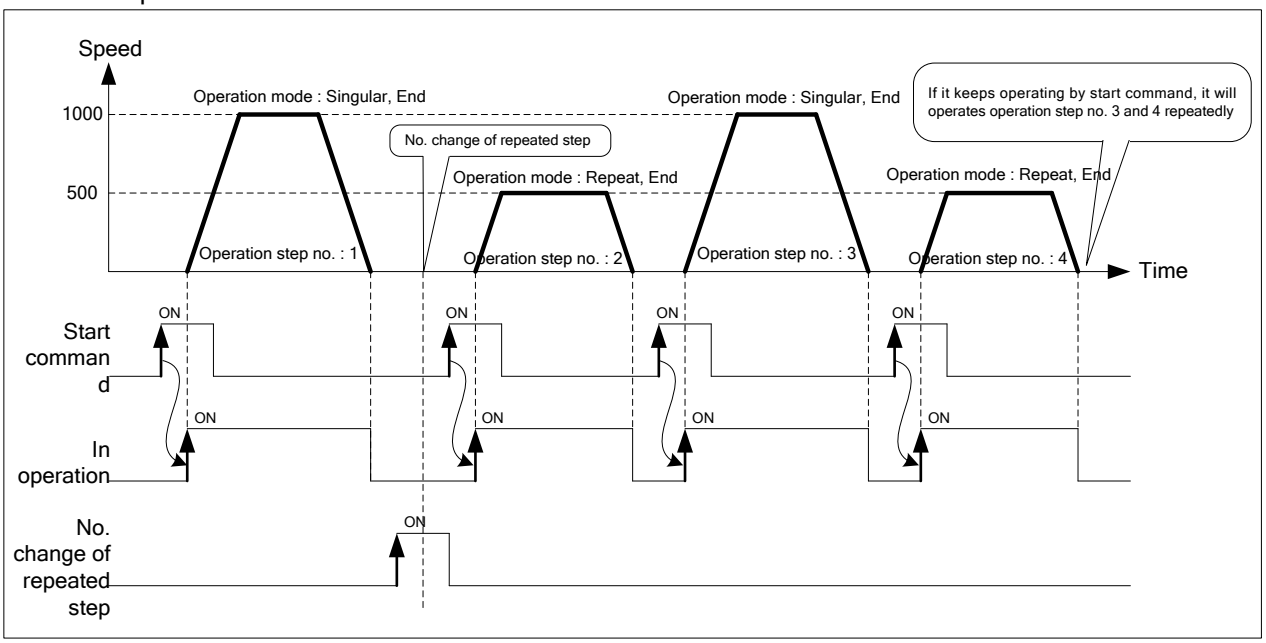

Operating step that execute according to starting command order will be [1] → [2] → [3] → [4].

(3) Go-on Operation

(a) With one time Start command, the positioning to the goal position of operation step is executed and the positioning shall be completed at the same time as dwell time proceeds and without additional start command, the positioning of operation step for (current operation step no. +1) shall be done.

(b) Go-on operation mode is available to execute several operation steps in order.

(c) Set the operation pattern by 'End' when executing the last step of Go-on operation.

(d) When operation pattern is Go-on (or continuous), continue operation until operation pattern come out as 'End'. Therefore, if there is no 'End' operation pattern, execute the operation data 400 times. When 400 times operation pattern is not the end, error occurs and operation will be stop. When 400 times operation steps is 'Go-on' and 'Continuous', execute operation data of Repeat Step Number.

(e) Operation direction shall be determined by setting value of goal position.

[Example] - When operating only by Start Command [when setting the step no. as “0” by indirect start

- Starting command execute total two times.

■ Setting of XG-PM

Step NO.	Control Method	Operation Method	Goal Position [pls]	Operation Speed [pls/s]	Accel NO.	Decel NO.	M Code	Dwell Time
1	Absolute Single-axis Positioning Control	Single Go-on	10000	1000	Once	Once	0	0
2	Absolute Single-axis Positioning Control	Single Go-on	15000	500	Once	Once	0	0
3	Absolute Single-axis Positioning Control	Single End	25000	1000	Once	Once	0	0
4	Absolute Single-axis Positioning Control	Single End	30000	500	Once	Once	0	0

■ Operation Pattern

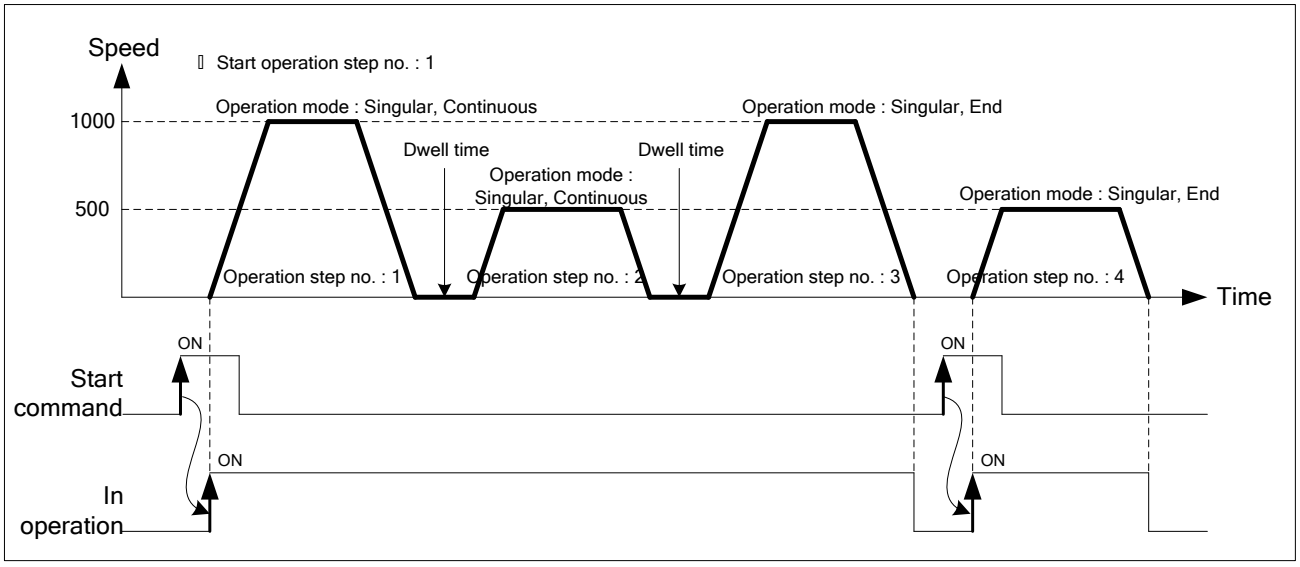

Operating step that execute according to starting command order will be [1] → [2] → [3] → [4].

(4) Continuous Operation

(a) Continuous Operation Overview

1) With one time Start command, the positioning for operation step set by continuous operation mode is executed to the goal position without stop and the positioning shall be completed at the same time as dwell time proceeds.
2) During continuous operation the moving amount of next operation step is smaller than the deceleration distance of current operation speed[driving speed ≠ bias speed], using predicted control(Look Ahead) to avoid to stop immediately.
3) Steps of dwell time set as 'Continuous' operation mode is ignored, steps of dwell time set as 'End' operation pattern is valid.
4) When you execute 'Continuous' operation mode, always set as 'End' for the very last operation step.
5) If operation pattern is Continuous(or Go-on), it keeps operate until the pattern turns out 'End'. If you want to operate with the position and speed of next step before the operation step that is active currently reaches the goal position, the operation by Next Move continuous operation command is available. If operation pattern doesn't have 'End', execute step data until 400 times. When 400 times operation pattern is not the 'End', Error occurs and Go-on operation control is stopped. 400 step of operation mode is repeated or Go-on, keep operate Go-on operation data of repeated step number.
6) Operation direction shall be determined by setting value of goal position.
7) If you want to operate with the position and speed of next step before the operation step that is active currently reaches the goal position, the operation by 「Next Move continuous operation」(XNMV) command is available.
8) With 「Next Move continuous operation」(XNMV) command, the operation in the acceleration, constant speed, deceleration section of Continuous operation is available.

[Example] - When operating only by Start Command [when setting the step no. as “0”

by indirect start

- Starting command execute once.

■ Setting of XG-PM

Step NO.	Control Method	Operation Method	Goal Position [pls]	Operation Speed [pls/s]	Accel NO.	Decel NO.	M Code	Dwell Time
1	Absolute Single-axis Positioning Control	Single Continuous	10000	500	Once	Once	0	0
2	Absolute Single-axis Positioning Control	Single Continuous	30000	1000	Once	Once	0	0
3	Absolute Single-axis Positioning Control	Single End	40000	300	Once	Once	0	0

■ Operation Pattern

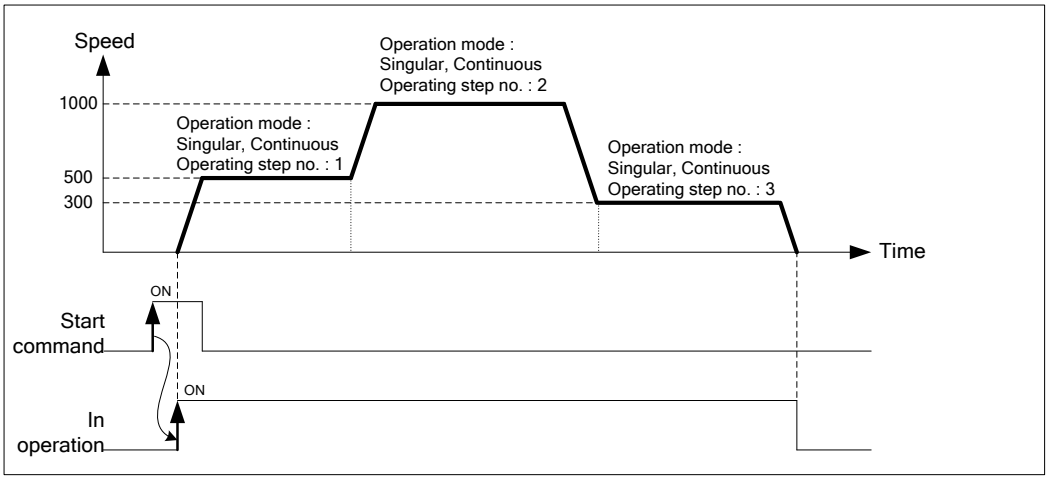

Operating step that execute according to starting command order will be [1] → [2] → [3].

Note

1. When operation method is continuous, before reaching the amount of movement set goal position, sometimes it transfer to next operation step speed. It is operating next step for remaining amount of movement less than operation speed to control operation speed continuously
(Remaining distance less than operation speed is that before reaching goal position and it is less than the distance can be moved by 1 control cycle (1ms)
2. If control method is linear or circular interpolation and operation method is continuous, positioning speed control will be change by setting value 「interpolation continuous operation positioning method」 of extended parameter. Continuous drive for a more detailed explanation, see the trajectory control. Further information, refer the continuous operation of interpolation control.

(b) Look Ahead

1) During continuous operation, moving amount of next operation step is less than current deceleration distance, using Look Ahead to prevent stop immediately when [operation speed ≠ Bias speed].
2) Look Ahead is not just current operation step, it's the control that calculating speed of entry permit for next step previously and having the goal position of next operation step and controlling current step speed as the endpoint.
3) XGF-P □ □ H positioning module, including current step, using Look Ahead as goal position of total 3 steps to calculate the speed of the endpoint.

Next it will explain the difference of general continuous operation control which using Look Ahead or not.

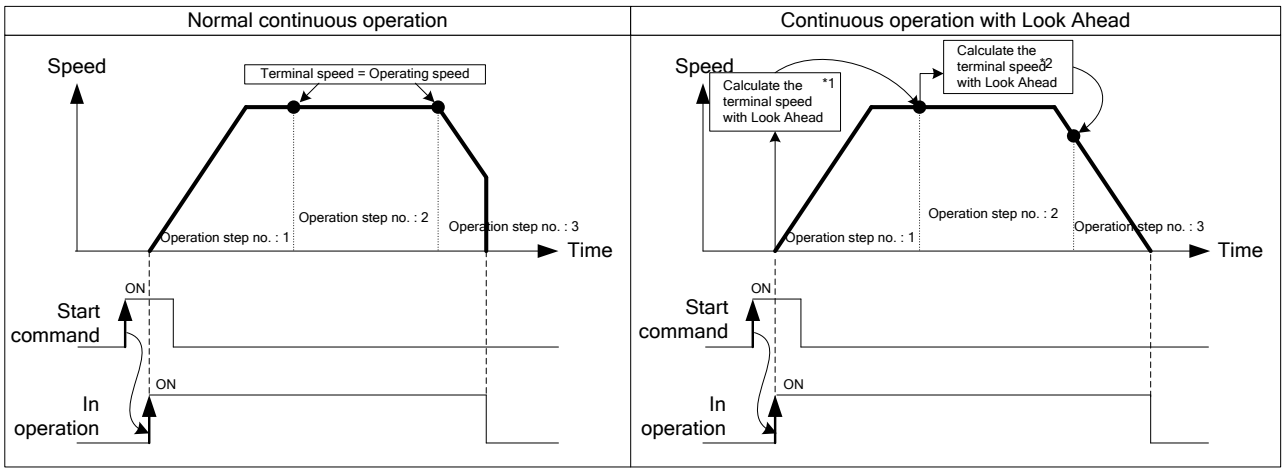

*1 : moving amount of Step 2 and Step 3 is more than the deceleration stop distance of step operation speed. So, endpoint speed = operation speed.

*2 : When moving amount of step 3 operate speed as step 2 set by, it's less than automatic deceleration stop distance. Therefore, use endpoint speed of step 2 after calculating the stop speed of step 3 be the bias speed.

(c) Continuous operation of interpolation control

When control method is linear or circular interpolation and operation method is Continuous, positioning control changes as setting value by extended parameter of 「Continuous interpolation positioning method」. There are 「Passing Goal Position」which operating through the specified goal position and 「Near Passing」which operating goal position of next step not to exceed a specified goal position.

Next, describe「continuous interpolation positioning method」setting of expanded parameter.

Item	Setting Value	Contents
Continuous interpolation positioning method	0 : Passing Goal Position	Execute Continuous Operation, from current step to next step operation data passing goal position which set on operation data.
	1 : Near Passing	Execute Continuous operation from current step to next step at near position which not over goal position in the set data to operate.

1) Passing Goal Position Continuous Operation

「Passing Goal Position」 Continuous Operation is from current step to next step must be passing by goal position to the data set on goal position. In general, interpolation control passed from the goal position when execute a continuous operation from current step to next step in data conversion there can be mechanical vibration at the last remaining moving amount caused by discontinuous operating speed.

XGF-P □ □ H positioning module use the speed calibration. It can solve mechanical vibration problem and execute Continuous operation which user set by from goal position to next step.

Next, describing the principle of「passing goal position」Continuous operation.

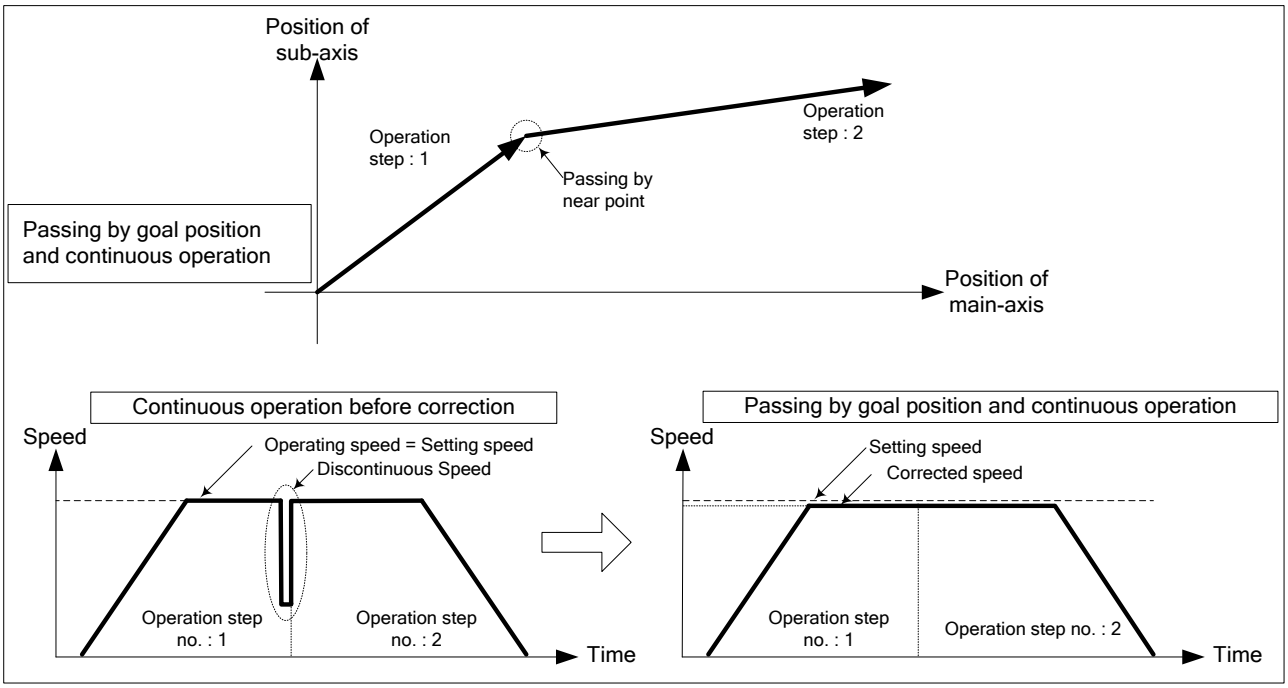

During 「passing goal position」Continuous operation, to execute positioning control accurately on goal position of each data which continuously operating, as much as remaining amount of movement at the last section of current step, make the operation speed low as set by and correct the position during acceleration, regular speed section.

2) Near Passing Continuous Operation

「Near Passing Continuous Operation」 is execute Continuous Operation to goal position of next step, near position which not over the goal position as set on operation data during Continuous operation from current step to next step. During conversion from current step to next step, it is the way to eliminate discontinuities of speed which occurs remaining amount of movement at the last of current step.

Next, describing the principle of「Near Passing」Continuous operation.

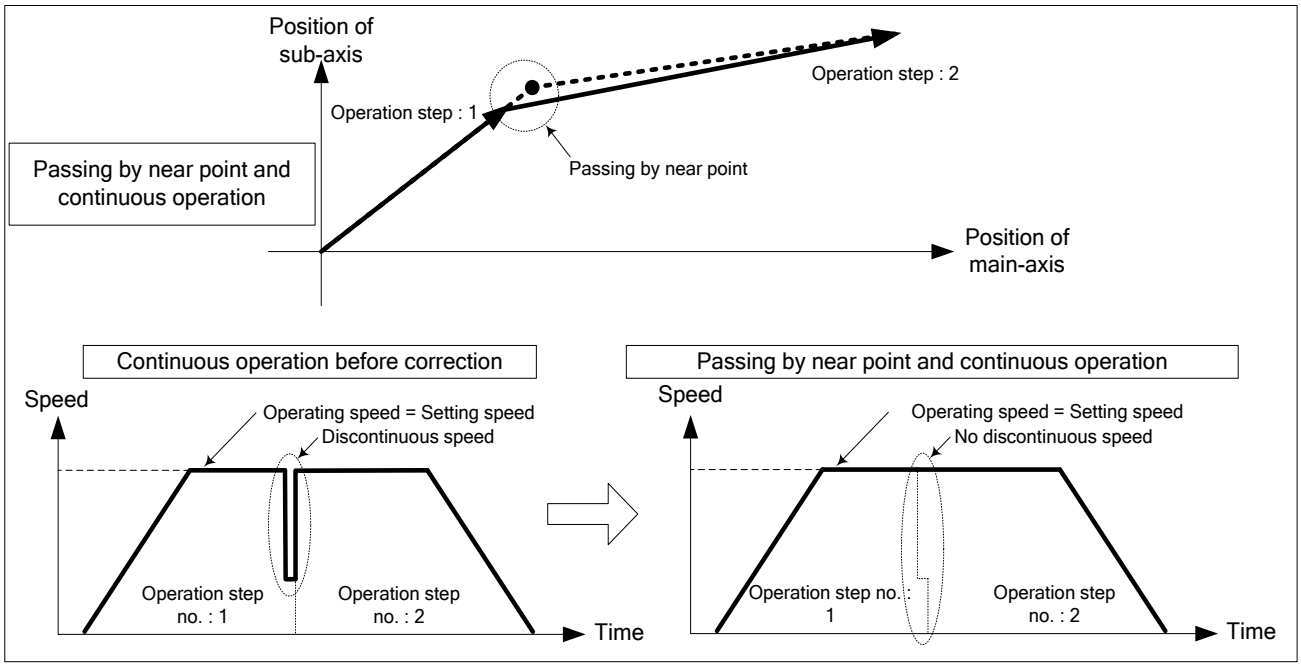

In the picture above, during general Continuous Operation, Occurring speed discontinuity because of remaining amount of movement at the last operation step NO.1. 「Near Passing」Continuous Operation, you can move the remaining amount of movement to next step and execute Continuous Operation without speed discontinuity.

Note

「Near passing」continuous operation is to remove the discontinuity of speed, according to the amount of movement of operation speed when step changes, sometimes it operates with next step speed before reaching the amount of movement set on goal position. However, in the case of Interpolation Continuous Operation control, if it operates speed of the next step before reaching the goal position, it can have a gap of trajectory data which user set by. The following is the difference of maximum axis position..

Difference of maximum axis position <(driving speed of each axis (pls / s) x control cycle (= 1ms))

For more information, please refer the picture above.

(d) Deceleration Stop of Continuous Operation

Continuous operation control is decelerating and positioning completed during the 'End' operation step. However, next time, it keeps next step operation after decelerating as bias speed.

1) When the moving direction of current executing operation step and the moving direction of next step is different (the case of shortened positioning control only)

■ Setting of XG-PM

Step NO.	Control Method	Operation Method	Goal Position [pls]	Operation Speed [pls/s]	Accel NO.	Decel NO.	M Code	Dwell Time
1	Absolute Single-axis Positioning Control	Single Continuous	10000	1000	Once	Once	0	0
2	Absolute Single-axis Positioning Control	Single End	3000	700	Once	Once	0	0

■ Operation Pattern

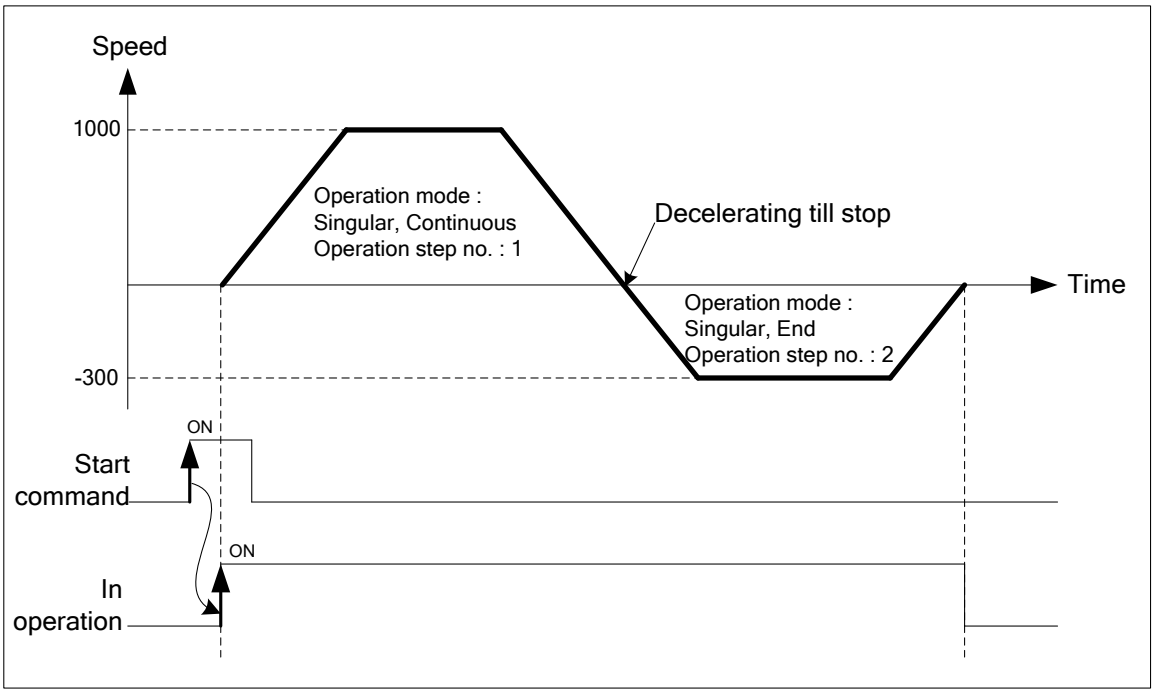

Step 1 operated by the start command, changing moving direction because of the goal position of next step goes 10000 → 3000 and decelerates as bias speed, operate Step 2 in a opposite direction.

2) When the next step of moving amount is 0

When the next step of moving amount is 0, operation speed is 0 during one cycle.

■ Setting of XG-PM

Step NO.	Control Method	Operation Method	Goal Position [pls]	Operation Speed [pls/s]	Accel NO.	Decel NO.	M Code	Dwell Time
1	Absolute Single-axis Positioning Control	Signle Continuous	10000	1000	Once	Once	0	0
2	Absolute Single-axis Positioning Control	Signle Continuous	10000	700	Once	Once	0	0
3	Absolute Single-axis Positioning Control	Signle End	15000	500	Once	Once	0	0

■ Operation Pattern

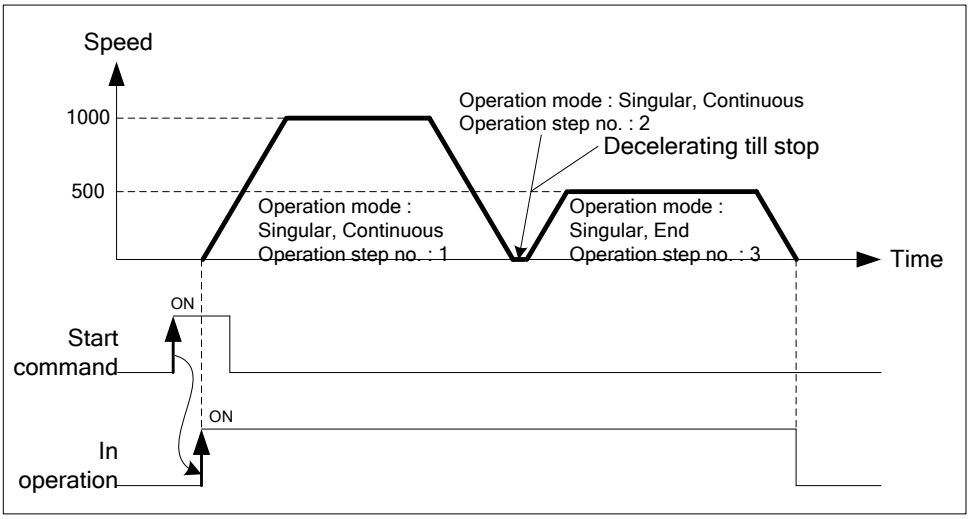

Step 1 operated by the start command, goal position of next step is same as current step goal position, moving amount is 0 after it decelerate as bias speed and stop and operate step 3.

3) When error is on the operation data of next step

Next step of operation speed is 0 or operation method of current step is 「Single-axis Positioning Control」, operation method of Next step is 「Single-axis FEED Control」which can not execute operation data, positioning completed on current step decelerate as bias speed and stop.

■ Setting of XG-PM

Step NO.	Control Method	Operation Method	Goal Position [pls]	Operation Speed [pls/s]	Accel NO.	Decel NO.	M Code	Dwell Time
1	Absolute Single-axis Positioning Control	Signle Continuous	10000	1000	Once	Once	0	0
2	Absolute Single-axis Positioning Control	Signle Continuous	20000	1000	Once	Once	0	0
3	Absolute Single-axis Positioning Control	Signle End	30000	1000	Once	Once	0	0

■ Operation Pattern

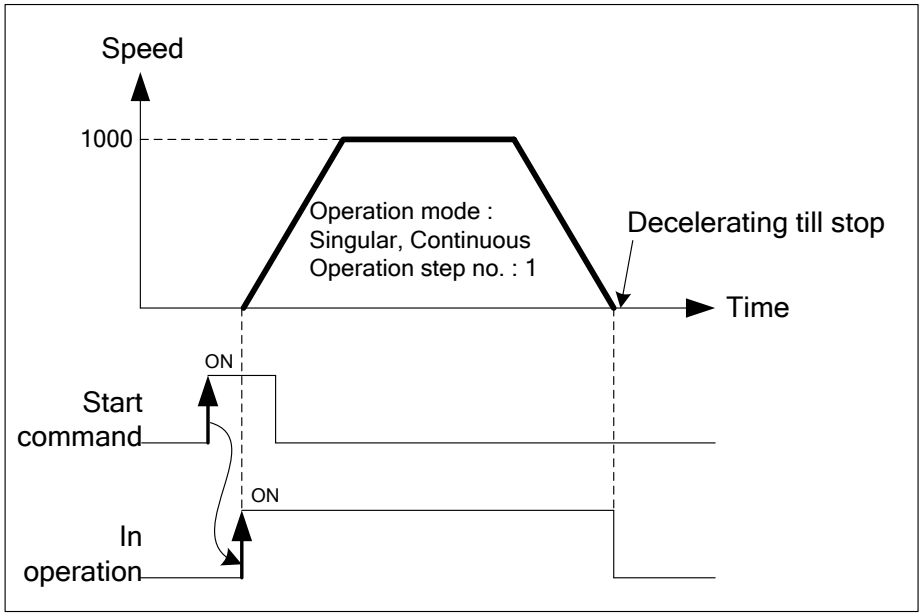

Note

During Continuous Operation of Linear interpolation or circular interpolation, do not check the direction of movement, even if moving direction changed, there is no deceleration stop. Therefore, if there is opposite direction of goal position set on operation data, because of Continuous Operation Control dramatically change the direction of movement and may occur due to mechanical shock.

In this case, use the operation method of 「Go-On」 and do not use「Continuous」, to not give the impact for machine.

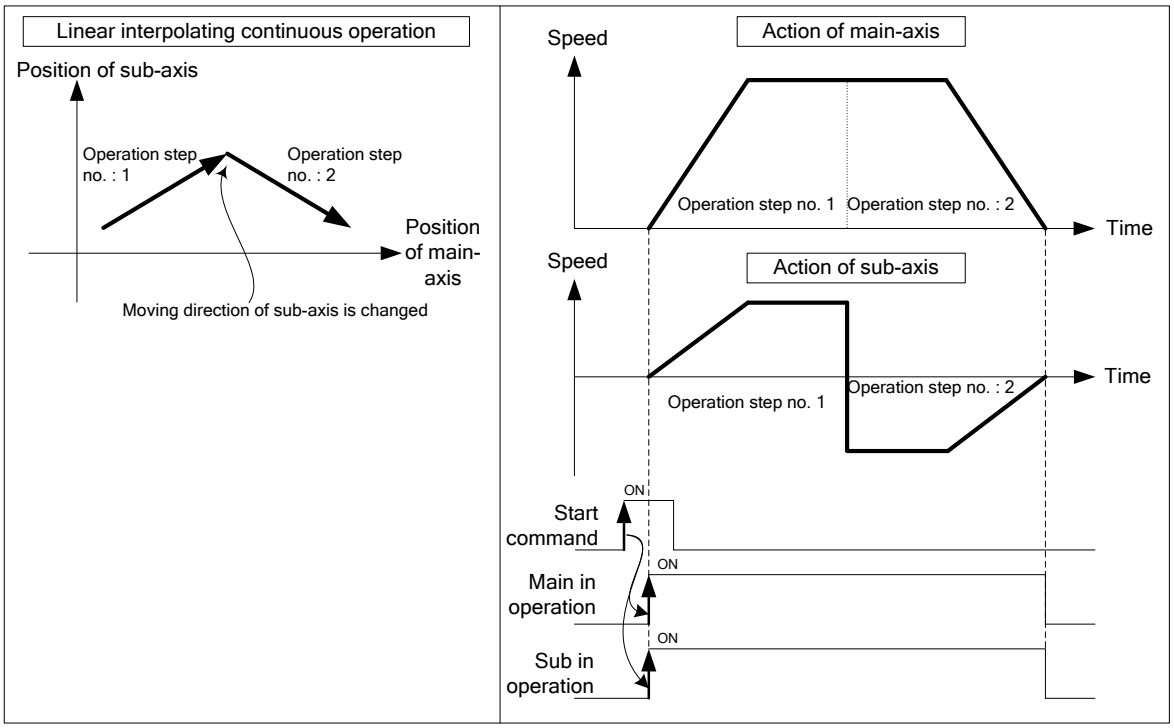

9.2.3 Single-axis Positioning Control

After executed by the start positioning operation command (「Direct start」, 「Indirect start」, 「Simultaneous start」), positioning control from specified axis (the current stop position) to goal position (the position to move).

(1) Control by Absolute method (Absolute coordinate) (「Absolute, Single-axis Positioning Control」)

(a) Positioning control from start position to goal position (the position assigned by positioning data). Positioning control is carried out based on the position assigned (origin position) by homing.

(b) Transfer direction shall be determined by start position and goal position.

▶ Start position < Goal position: forward direction positioning

▶ Start position > Goal position: reverse direction positioning

[Example] Set the Relative Coordinates as follow, Operate single-axis positioning control.

▷ Start position: 1000,

▷ Goal position: 8000

The transfer amount to forward direction shall be 7000 (7000=8000-1000).

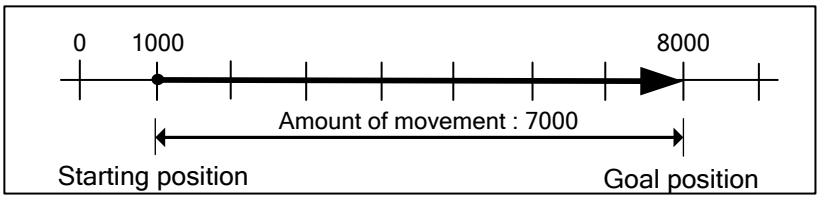

■ Setting of XG-PM

Step NO.	Control Method	Operation Method	Goal Position [pls]	Operation Speed [pls/s]	Accel NO.	Decel NO.	M Code	Dwell Time
1	Absolute Single-axis Positioning Control	Single End	8000	1000	Once	Once	0	100

■ Operation Pattern

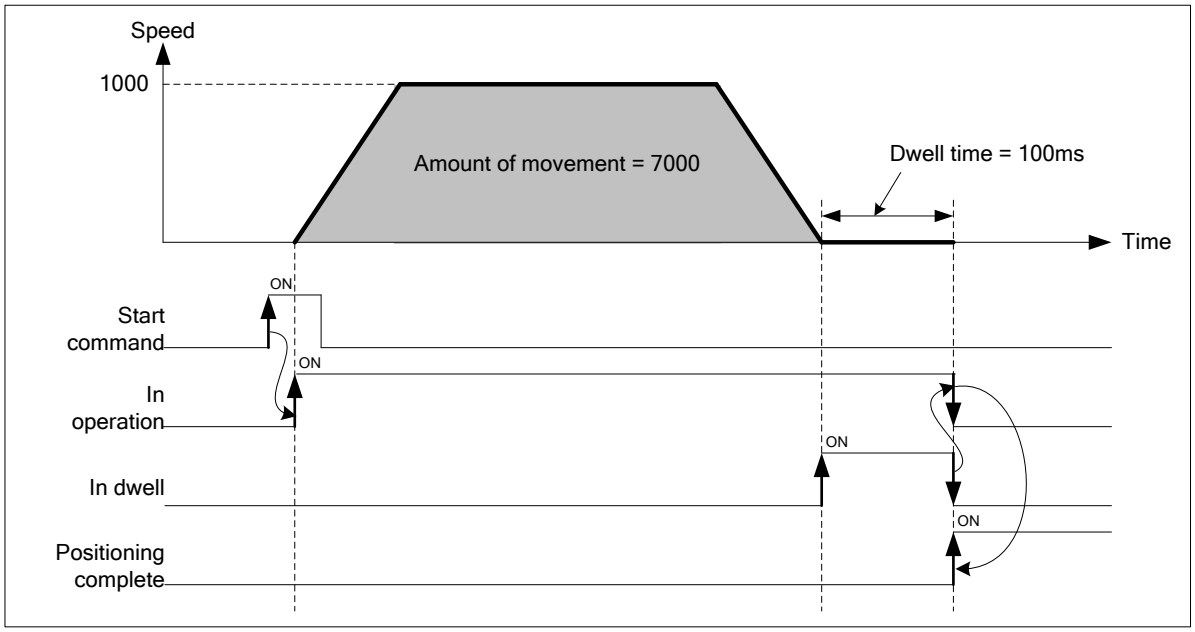

(2) Control by Incremental method (Relative coordinate) (「Relative, Single-axis Positioning Control」)

(a) Positioning control as much as the goal transfer amount from start position. Unlike the absolute coordinates of goal position, it is not a value of specified on goal position; it is a moving amount of current position.

(b) Transfer direction shall be determined by the sign of transfer amount.

▷Transfer direction (+) or no sign: forward direction (current position increase) positioning

▷Transfer direction (-) : reverse direction (current position decrease) positioning

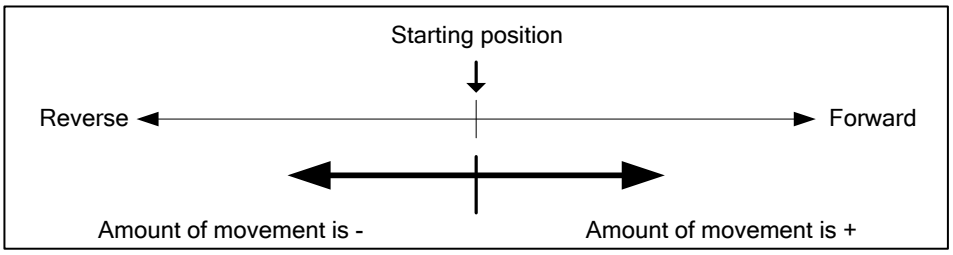

[Example] Set the Relative Coordinates as follow, Operate single-axis positioning control.

▷ Start address : 5000,

▷Goal address : -7000

This will be reverse direction and positioning will be at the point of –2000.

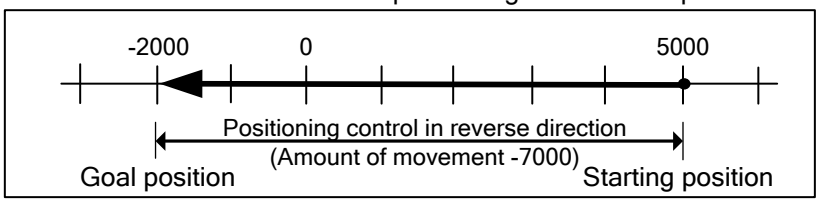

■ Setting of XG-PM

Step NO.	Control Method	Operation Method	Goal Position [pls]	Operation Speed [pls/s]	Accel NO.	Decel NO.	M Code	Dwell Time
1	Absolute Single-axis Positioning Control	Single End	-7000	1000	Once	Once	0	100

■ Operation Pattern

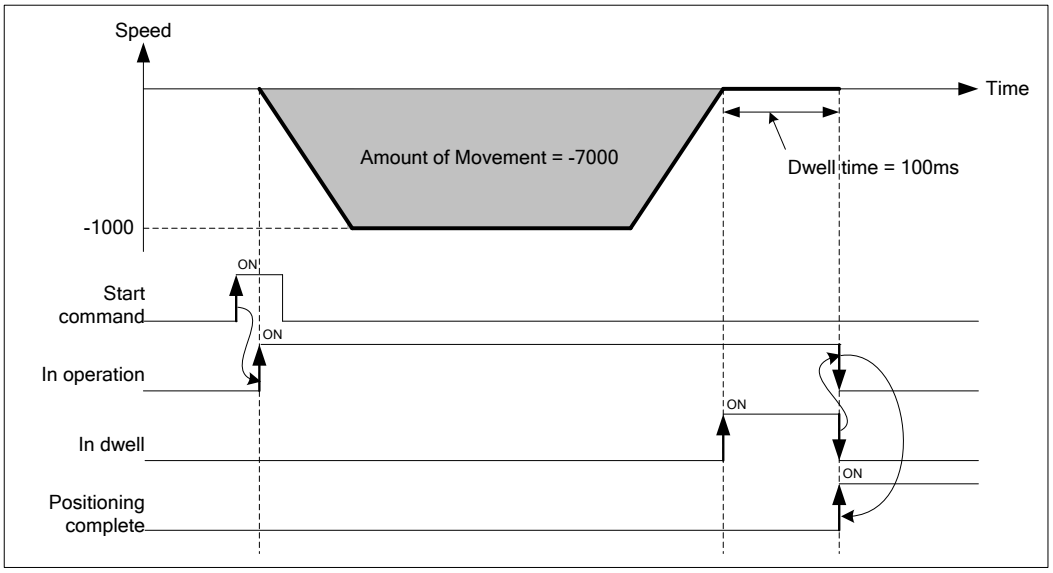

9.2.4 Single-axis Speed Control

After executed by the start positioning operation command (「Direct start」, 「Indirect start」, 「Simultaneous start」), this controls the speed by the setting speed until deceleration stop command is entered.

(1) Features of Control

(a) Speed control contains 2 types of start : Forward direction start and Reverse direction start.

▷Forward direction : when position value is positive number (+) (“0” included)

▷Reverse direction : when position value is negative number (-)

(b) In case of using speed control, the following items of operation data do not affect.

▷ Coordinates, Operation method, Dwell time

▷ “Absolute, single-axis speed control”, “Relative, single-axis speed control” execute same operation.

(c) Accelerating operation of speed control operate with acceleration number and time on setting data, decelerating operation operate with deceleration number and time of a command 「deceleration stop」.

(2) Operation Timing

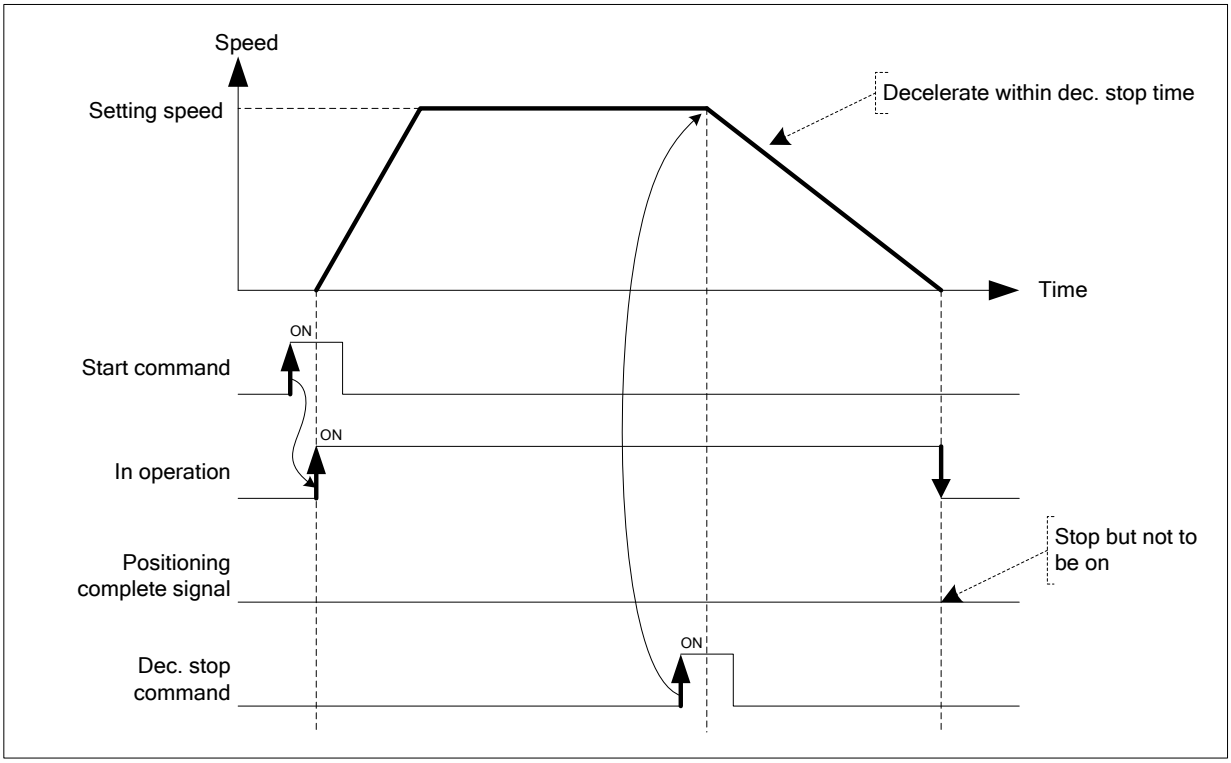

(3) Restrictions

(a) Set the operation pattern of speed control as 'End' or 'Go-On'. When it is set on "Continuous", error occurs (error code: 236) and can not execute speed control.

(b) Using as speed control, only when「M code mode」of extended parameter is "with" , M code signal is "On". (Using "After mode", M code signal is not "On".)

(c) Speed control of software upper/lower limit checking change according to the setting of the speed control of software upper/lower limit check.

Item	Setting Value	Contents
During Speed Control Soft Upper/Lower limit	0 : Not Detected	During Speed Control, do not operate to check the range of upper/lower limit of software
	1 : Detected	During Speed Control, operate to check the range of upper/lower limit of software

(4) Setting of XG-PM

Step NO.	Control Method	Operation Method	Goal Position [pls]	Operation Speed [pls/s]	Accel NO.	Decel NO.	M Code	Dwell Time
1	Absolute Single-axis Speed Control	Single End	100	1000	Once	Once	0	0

9.2.5 Single-axis Feed Control

After executed by the start positioning operation command (「Direct start」, 「Indirect start」, 「Simultaneous start」), change current stop position as '0', positioning control until setting goal position.

(1) Features of control

(a) The value set on goal position is moving amount. That is, moving direction is decided by the code of setting goal position.

▷Forward direction : when position address is positive number (+) ("0" included)

▷Reverse direction : when position address is negative number (-)

(b) In case of using Single-axis Feed Control, the following items of operation data do not affect.

▷ Coordinates

▷ "Absolute, single-axis speed control", "Relative, single-axis speed control" execute same operation.

(2) Operation Timing

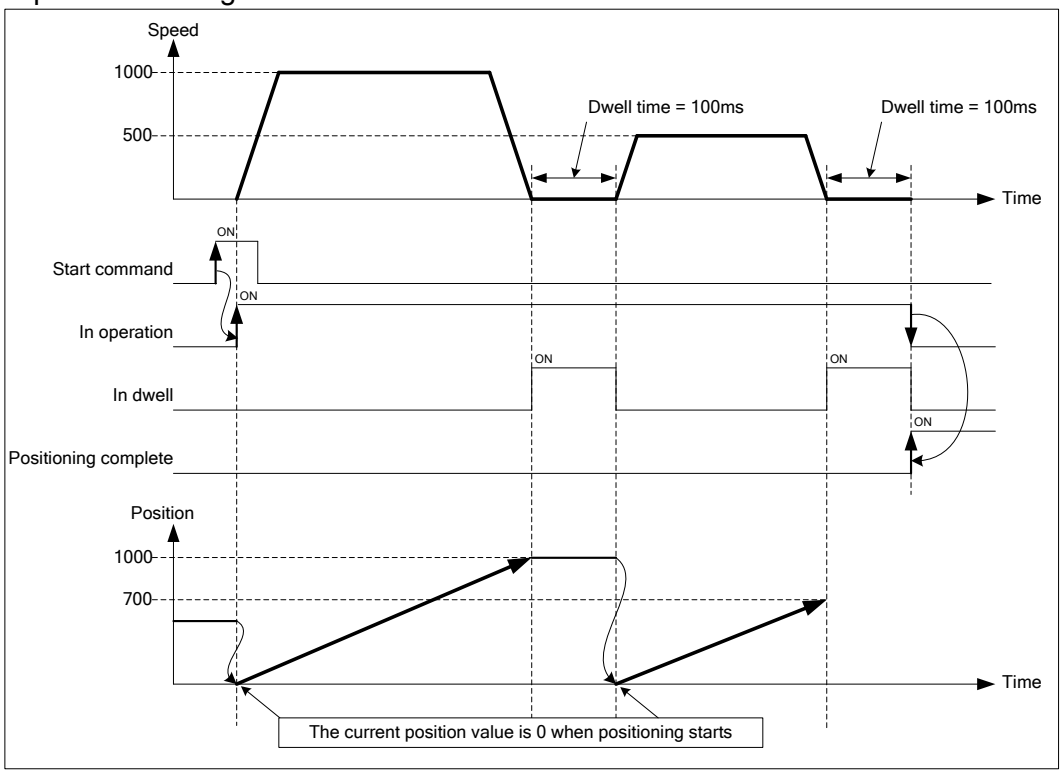

(3) Restrictions

(a) Set the operation pattern of Feed control as 'End' or 'Go-On'. When it is set on "Continuous", error occurs (error code: 230) and can not execute Feed control.

(4) Setting of XG-PM

Step NO.	Control Method	Operation Method	Goal Position [pls]	Operation Speed [pls/s]	Accel NO.	Decel NO.	M Code	Dwell Time
1	Absolute, Single-axis Feed Control	Single, Go-On	1000	1000	Once	Once	0	100
2	Absolute, Single-axis Feed Control	Single End	700	500	Once	Once	0	100

9.2.6 Linear Interpolation Control with 2 axes

After executed by positioning operation start command (「Indirect start」, 「Synchronous start」), then executing interpolation control from starting position to the goal position with interpolation axis set as the main axis and sub axis.

(1) Linear interpolation control with absolute coordinates (「Absolute, Linear Interpolation」)

(a) Execute linear interpolation from starting position to the goal position designated on positioning data. Positioning control is on basis of the designated position from homing.

(b) The direction of movement depends on the starting position and the goal position for each axis.

■ Starting position < Goal position : Positioning operation in forward

■ Starting position > Goal position : Positioning operation in reverse

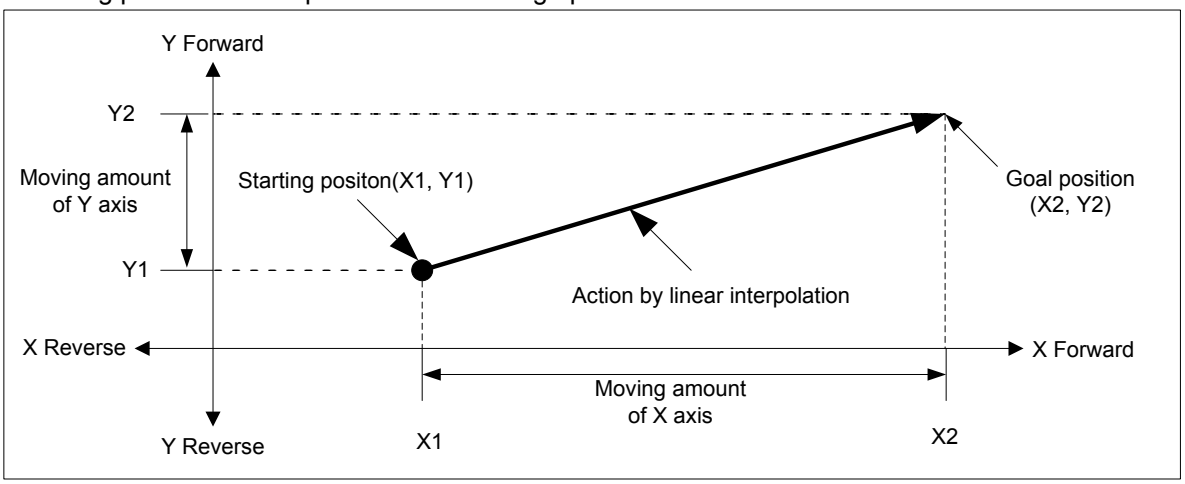

(c) Restrictions

Linear interpolation with 2 axes may not be executed in the case below.

■ 「Sub axis setting」 Error (error code : 253)

- 「Sub axis setting」 of main axis operating data is “Axis-undecided”
- 「Sub axis setting」 of main axis operating data is the same as main axis no.
- 「Sub axis setting」 of main axis operating data exceeds the settable axis no. of module now using.

Note

Because more than 2 axes are in action, so need user to pay attention

(1) The commands available are as follows.

Speed override, Dec. time, Emergent stop, Skip operation, Continuous operation

(2) The commands unavailable in linear interpolation are as follows.

- Position/Speed switching control, Position override

(3) The parameter items which work depending on the value of each axis are as follows.

- Backlash revising, Software high/low limit

(d) Setting example of operating data

Setting items	Main-axis setting	Sub-axis setting	Description
Control method	Absolute, Linear interpolation	- *1	When linear interpolation control is executed by the method of absolute coordinates, set「Absolute, Linear interpolation」on the main axis
Operating method	Singular, End	-	Set the operating method to execute linear interpolation
Goal position [pls]	10000	5000	Set the goal position to position on main-axis and sub-axis
Operating speed [pls/s]	1000	-	Use speed-designated method of main axis for linear interpolation
Acc. no.	No.1	-	Set acc. no. for acceleration (no.1 ~ no.4)
Dec. no.	No.2	-	Set dec. no. for deceleration. (no.1 ~ no.4)
M code	0	-	When need to execute auxiliary work synchronizing with linear interpolation
Dwell time	500	-	Set dwell time(ms) to outputting the signal positioning completion
Sub-axis setting	Axis2	-	Set an axis to be used as sub-axis among settable axis in operating data of main-axis

- *1 : It does not need to be set. Whatever value is set as, it does not affect linear interpolation.

Note

Linear interpolation control is executed on the basis of operating data of main axis.
Only 「Goal position」item of sub-axis setting affect linear interpolation. In other word, whatever value is set as, it does not affect the operation and errors do not arise.

[Example] axis1 and axis2 are main and sub axis each. Execute linear interpolation by the setting as follows.

■ Starting position (1000, 4000), Goal position (10000, 1000)

In this condition, the operation is as follows.

■ Setting example of XG-PM

▪ Operating data of main-axis(axis1)

Step no.	Control method	Operating method	Goal position [pls]	Operating speed [pls/s]	Acc. no.	Dec. no.	M code	Dwell time	Sub axis setting
1	Absolute, Linear	Singular, End	10000	3000	No.1	No.1	0	100	Axis2

▪ Operating data of sub-axis(axis2)

Step no.	Control method	Operating method	Goal position [pls]	Operating speed [pls/s]	Acc. no.	Dec. no.	M code	Dwell time	Sub axis setting
1	Absolute, Shortcut positioning control	Singular, End	1000	0	No.1	No.1	0	0	Axis-undecided

■ Operating pattern

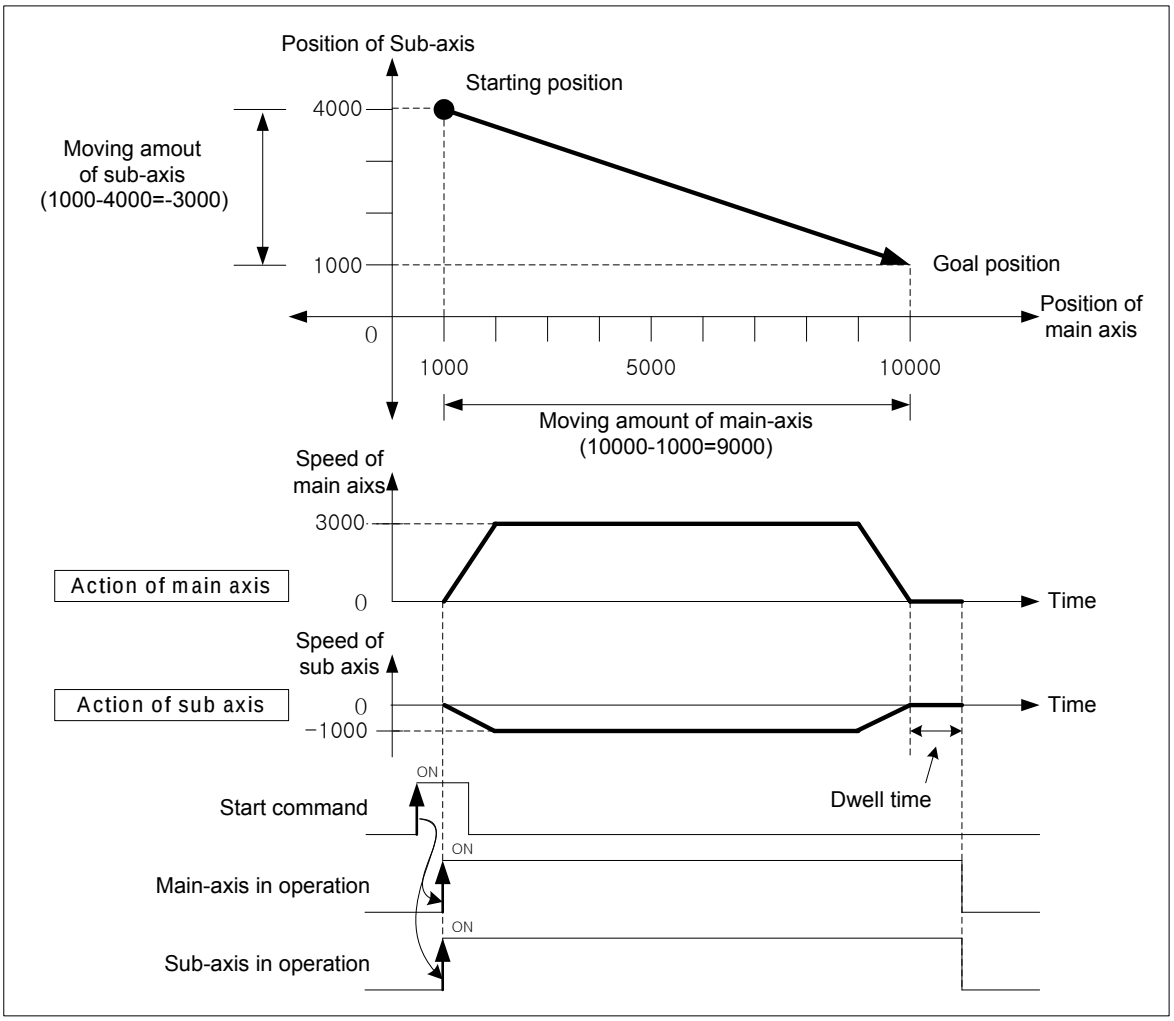

(2) Linear interpolation control with relative coordinates (「Relative, Linear Interpolation」)

(a) Execute 2 axes linear interpolation from starting position to the goal position. Positioning control is on basis of the current stop position.

(b) Moving direction depends on the sign of the goal position (Moving amount)

■ The sign is positive (+ or nothing) : Positioning operation in forward

■ The sign is negative (-) : Positioning operation in reverse

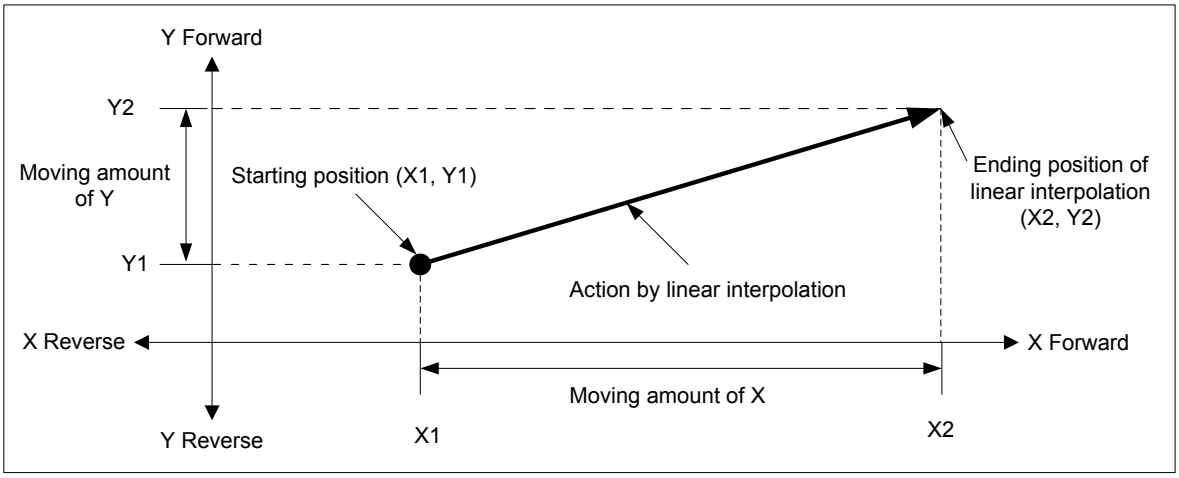

(c) Restrictions

Linear interpolation with 2 axes may not be executed in the case below.

■ 「Sub-axis setting」error (error code : 253)

- 「Sub-axis setting」value of main axis operating data is “Axis-undecided”
- 「Sub-axis setting」value of main axis operating data is same as the main axis no.
- 「Sub-axis setting」value of main axis operating data exceeds settable axis no.

Note

In linear interpolation start, more than 2 axes operate synchronously. Need users to pay attention.

(1) Auxiliary operations may be used are as follows.

- Speed override, Dec. stop, Emergent stop, Skip operation, Continuous operation

(2) The commands may not be used in linear interpolation are as follows.

- Position/Speed switching control, Position override.

(3) The parameter items operating on the basis of setting value on each axis are as follows.

- Backlash correction in extended parameter, Software high/low limit, Software low limit

(d) Setting example of operation data

Setting items	Main-axis setting	Sub-axis setting	Description
Control method	Relative, Linear interpolation	- *1	When linear interpolation control is executed by the method of relative coordinates, set「Relative, Linear interpolation」on the main axis
Operating method	Singular, End	-	Set the operating method to execute linear interpolation
Goal position [pls]	10000	5000	Set the goal position to position on main & sub-axis
Operating speed [pls/s]	1000	-	Use speed-designated method of main axis for linear interpolation
Acc. no.	No.1	-	Set acc. no. for acceleration (no.1 ~ no.4)
Dec. no.	No.2	-	Set dec. no. for deceleration. (no.1 ~ no.4)
M code	0	-	When need to execute auxiliary work synchronizing with linear interpolation
Dwell time	500	-	Set dwell time(ms) to outputting the signal positioning completion
Sub-axis setting	Axis2	-	Set an axis to be used as sub-axis among settable axis in operating data of main-axis

- *1 : It does not need to be set. Whatever value is set as, it does not affect linear interpolation.

Note

Linear interpolation control is executed on the basis of operating data of main axis.
Only 「Goal position」item of sub-axis setting affect linear interpolation. In other word, whatever value is set as, it does not affect the operation and errors do not arise.

[Example] axis1 and axis2 are main and sub axis each. Execute linear interpolation by the setting as follows.

■ Starting position (1000, 4000), Goal position (9000, -3000)

In this condition, the operation is as follows.

■ Setting example of XG-PM

▪ Operating data of main-axis(axis1)

Step no.	Control method	Operating method	Goal position [pls]	Operating speed [pls/s]	Acc. no.	Dec. no.	M code	Dwell time	Sub axis setting
1	Absolute, Linear	Singular, End	9000	3000	No.1	No.1	0	100	Axis2

▪ Operating data of sub-axis(axis2)

Step no.	Control method	Operating method	Goal position [pls]	Operating speed [pls/s]	Acc. no.	Dec. no.	M code	Dwell time	Sub axis setting
1	Absolute, Shortcut positioning control	Singular, End	-3000	0	No.1	No.1	0	0	Axis-undecided

■ Operating pattern

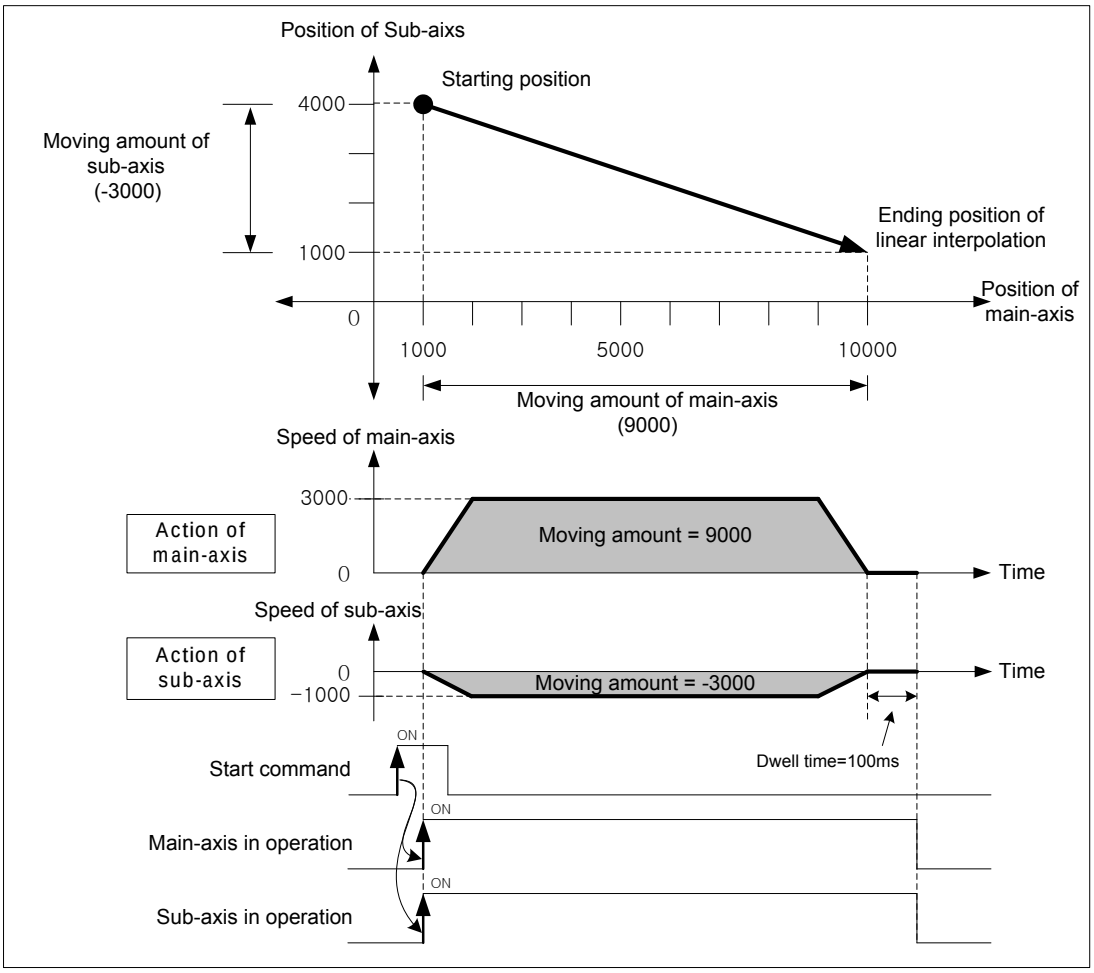

(3) Speed in 2 axes linear interpolation control

Operating speed in linear interpolation is according to the method of main-axis designating. After operating speed is set on command axis (main), the designated axis for interpolation is operated by APM module's calculating each moving amount. Speed of sub-axis and actual speed of machine are calculated as follows.

■ Speed in 2 axes linear interpolation

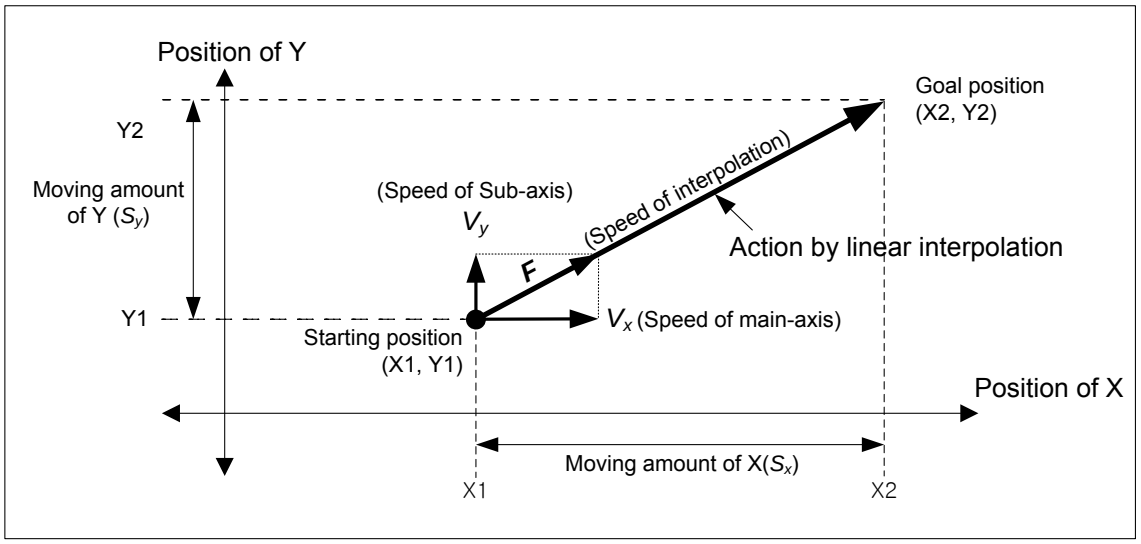

$$\text{Speed of sub}(V_y) = \text{Speed of main}(V_x) \times \frac{\text{Moving amount of Sub}(S_y)}{\text{Moving amount of Main}(S_x)}$$

$$\text{Interpolating speed}(F) = \sqrt{V_x^{\,2} + V_y^{\,2}}$$

[Example]

■ Starting position (2000, 1000)

■ Goal position (6000, 4000)

■ Operating speed : 400 [pls/s]

Speed of sub-axis and interpolating speed are as follows.

Speed of sub-axis = $400 \times \frac{3000}{4000} = 300$ [pls/s]

Interpolating speed = $\sqrt{400^2 + 300^2} = 500$ [pls/s]

Note

(1) Speed limit for Sub-axis

When using linear interpolation control and moving distance of main < moving distance of sub, it is possible that sub-axis speed calculated by APM module exceeds 「Speed limit」 of basic parameter. In this case, error (error code : 261) arises and sub-axis speed is recalculated, then sub-axis continues to operate. To prevent that errors arise, operate it at the speed below limit.

(2) The speed when the distance main-axis moved is 0

When the distance main-axis moved is 0, the operating speed of main-axis operating data becomes actual interpolating speed. In the case that the distance main-axis moved is 0 and executing 2 axes linear interpolation, only sub-axis operates at the speed set on command axis.

■ Setting example of XG-PM

▪ Operating data of Main-axis

Step no.	Control method	Operating method	Goal position [pls]	Operating speed [pls/s]	Acc. no.	Dec. no.	M code	Dwell time	Sub axis setting
1	Absolute, Linear interpolation	Singular, Continuous	5000	1000	No.1	No.1	0	100	Axis2
2	Absolute, Linear interpolation	Singular, End	5000	1000	No.1	No.1	0	100	Axis2

▪ Operating data of Sub-axis

Step no.	Control method	Operating method	Goal position [pls]	Operating speed [pls/s]	Acc. no.	Dec. no.	M code	Dwell time	Sub axis setting
1	Absolute, shortcut position control	Singular, End	1000	0	No.1	No.1	0	0	Axis-undecided
2	Absolute, shortcut position control	Singular, End	3000	0	No.1	No.1	0	0	Axis-undecided

■ Operating pattern

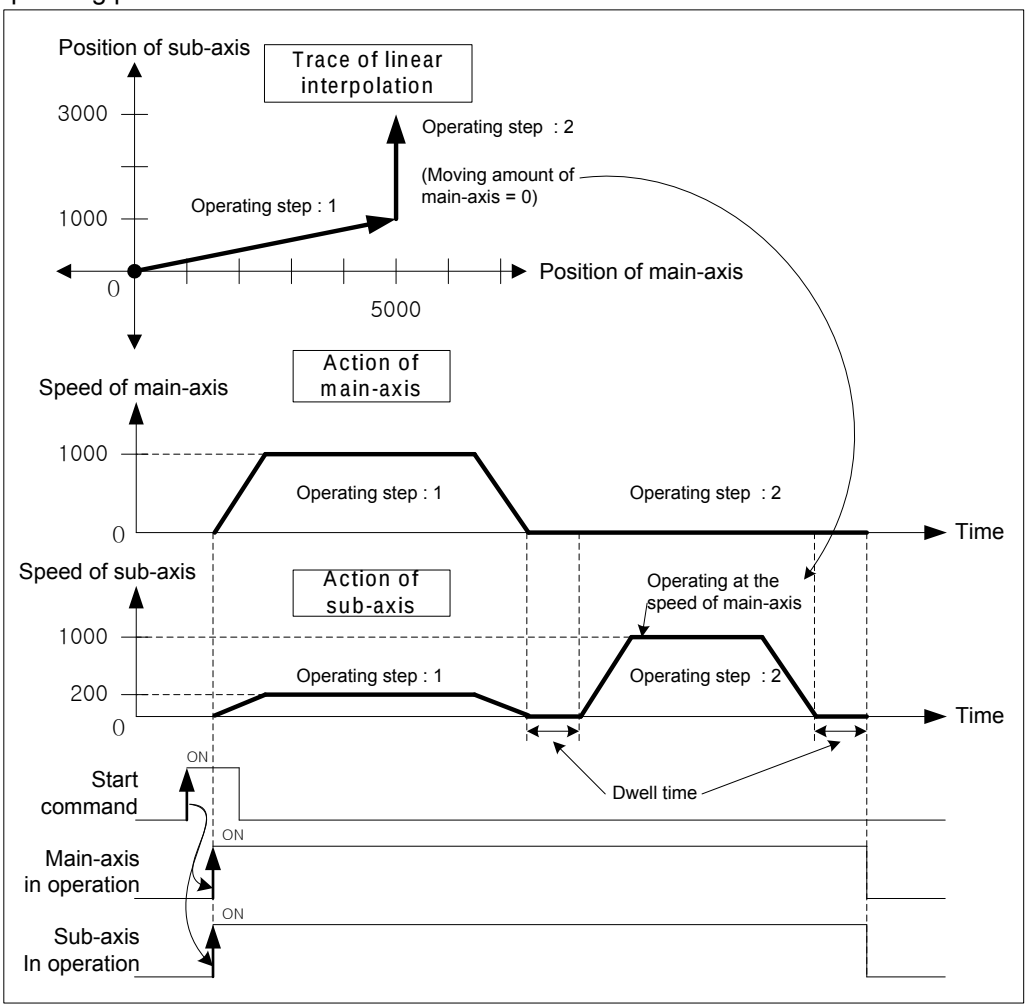

(4) 2 axes linear interpolating continuous operation with circular arc interpolation

When the operation method is set as “continuous” and the direction of movement changes rapidly, machine is possible to be damaged. When it does not have to position to the goal position, user may interpolate ‘circular interpolating operation’ between two trace to make operation softer and smoother.

(a) Operation order

1) Confirm the execution of 2 axes linear interpolating continuous operation with circular arc interpolation when linear interpolation starts. It may be set in「2 axes linear interpolating continuous operation with circular arc interpolation」of extended parameter.

Setting items	Setting value	Description
2 axes linear interpolating continuous operation with circular arc interpolation	0 : Not to execute	When executing it, interpolate circular arc
	1 : To execute	When executing it, not to interpolate circular arc

2) Reset the starting position of circular interpolation (Goal position of Linear trace 1) and the goal position (Starting position of Linear trace 2) through checking the position circular arc will be interpolated at. The position circular arc will be interpolation at may be set in「Circular arc interpolating position」of extended parameter.

Setting items	Setting value	Description
2 axes linear interpolating continuous operation with circular arc interpolation	0 ~ 2147483647	Set the position circular arc will be interpolated at. This value means the relative distance from the goal position of linear trace 1.

3) Execute linear interpolation to the starting position of circular arc and continue to execute circular interpolation at the same speed as linear interpolation. After finish the circular interpolation, continue to execute linear interpolation at the same speed.

(b) Operating pattern

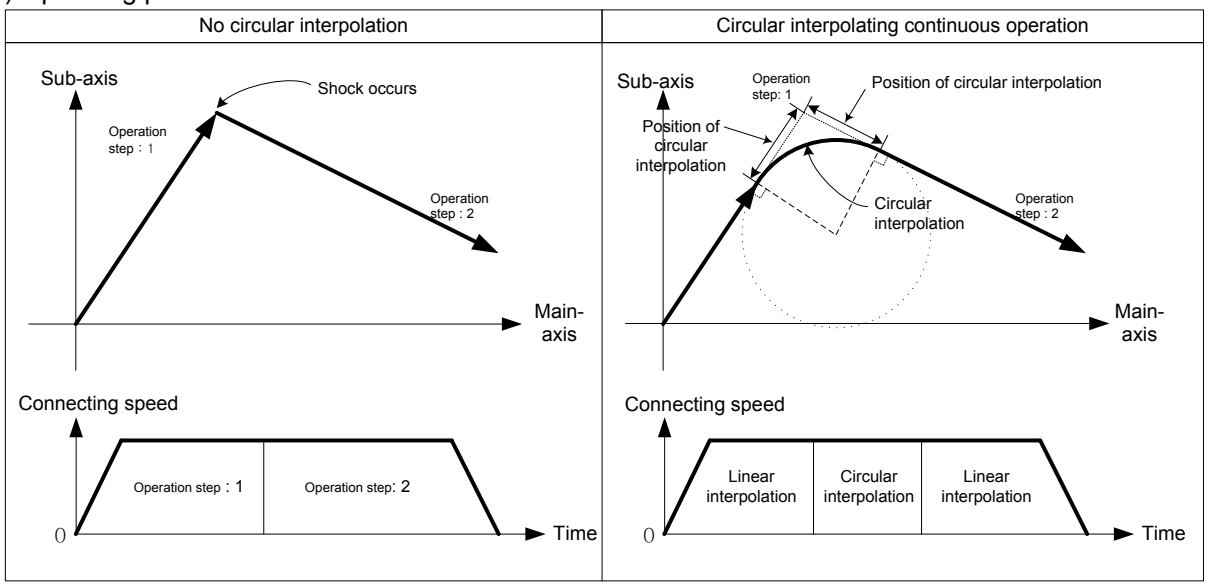

(c) Restrictions

Circular interpolation is not executed in the case below but linear interpolation is executed to the goal position.

- Operating method of operation data is “End” or “Continue”
- Position of circular arc interpolating is bigger than linear trace 1, 2 (Error code : 262)
- Trace of both linear interpolations are on the same line

[Example] Execute linear interpolation when the extended parameter setting is same as follows at the current position (0,0)

Extended parameter	Setting value
2 axes linear interpolating continuous operation with circular arc interpolation	1 : Circular arc interpolating continuous operation
Position of 2 axes linear interpolating continuous operation with circular arc interpolation	2000

■ Setting example of XG-PM

- Operating data of Main-axis

Step no.	Control method	Operating method	Goal position [pls]	Operating speed [pls/s]	Acc. no.	Dec. no.	M code	Dwell time	Sub axis setting
1	Absolute, Linear interpolation	singular, continuous	0	3000	No.1	No.1	0	0	Axis2
2	Absolute, Linear interpolation	singular, continuous	5000	3000	No.1	No.1	0	0	Axis2
3	Absolute, Linear interpolation	singular, end	5000	3000	No.1	No.1	0	100	Axis2

- Operating data of Sub-axis

Step no.	Control method	Operating method	Goal position [pls]	Operating speed [pls/s]	Acc. no.	Dec. no.	M code	Dwell time	Sub axis setting
1	Absolute, shortcut position control	singular, end	1000	0	No.1	No.1	0	0	Axis-undecided
2	Absolute, shortcut position control	singular, end	1000	0	No.1	No.1	0	0	Axis-undecided
3	Absolute, shortcut position control	singular, end	4000	0	No.1	No.1	0	0	Axis-undecided

■ Operating pattern

No circular arc interpolation	Circular arc interpolating continuous operation
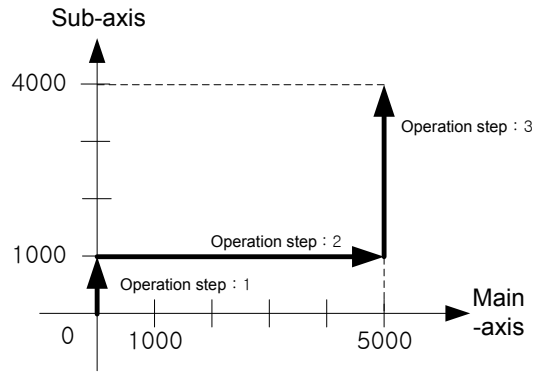	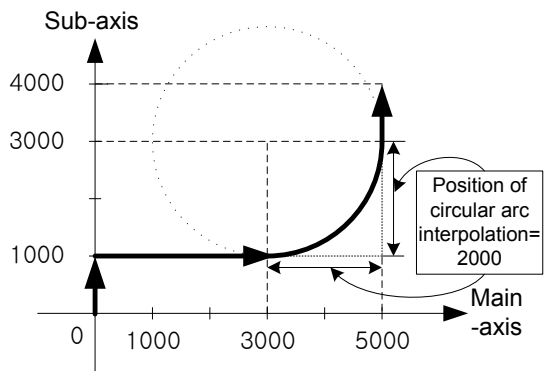

■ Description about action

When executing operation step no.1, execute linear interpolation to original goal position (0,1000) without circular arc interpolation because position to interpolate circular arc(2000) is bigger than the length of line 1(1000).

When finishing linear interpolation to goal position of operation step no.1 and executing operation step no.2, because position to interpolate circular arc(2000) is smaller than line length of step no.2(5000) and no.3(3000), so recalculate the starting position (Goal position of linear trace no.1) and the goal position (Starting position of linear trace no.2) of circular interpolation.

After continue to execute linear interpolation to the recalculated goal position of operation step no.2(3000,1000), then execute circular interpolation to recalculated starting position of operation step no.3(5000,3000).

After circular interpolation, execute linear interpolation to the goal position of operation step no.3(5000,4000), Positioning will be complete.

9.2.7 Linear Interpolation Control with 3 axes

After executed by positioning operation start command (「Indirect start」, 「Synchronous start」), then executing interpolation control from starting position to the goal position with interpolation axis set as the main axis and sub axis.

(1) Linear interpolation control with absolute coordinates (「Absolute, Linear Interpolation」)

(a) Execute linear interpolation with 3 axes from starting position to the goal position designated on positioning data. Positioning control is on basis of the designated position from homing.

(b) The direction of movement depends on the starting position and the goal position for each axis.

■ Starting position < Goal position : Positioning operation in forward

■ Starting position > Goal position : Positioning operation in reverse

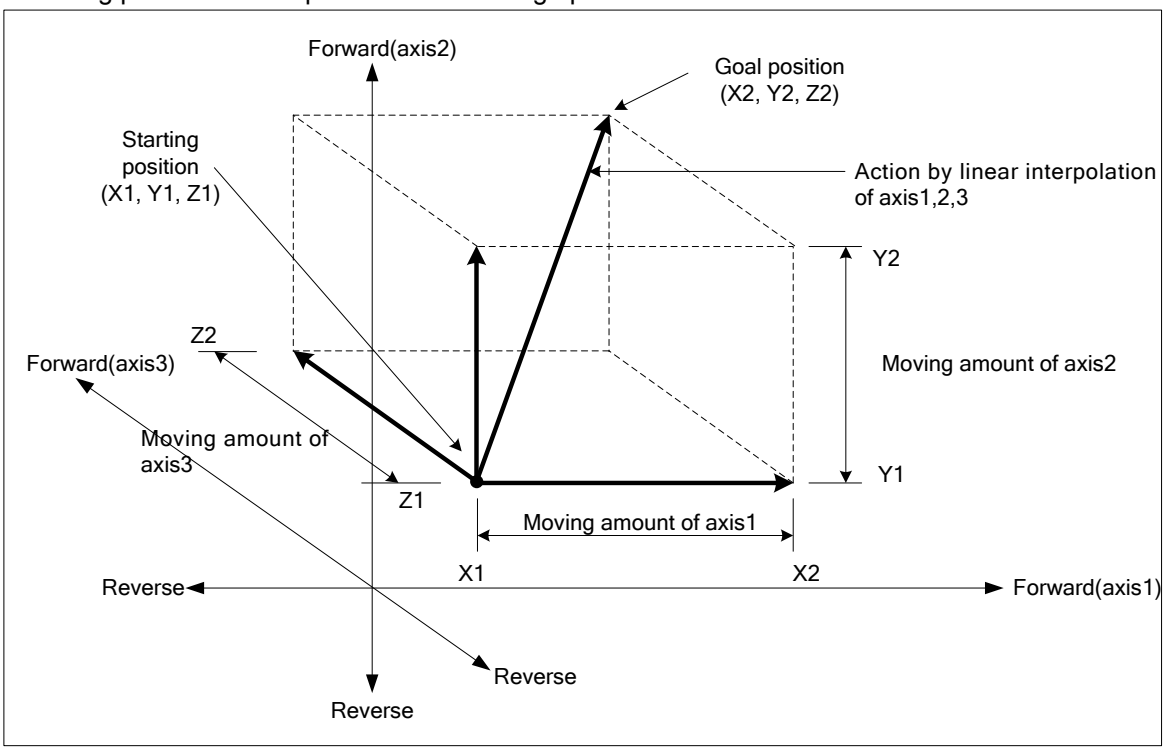

(c) Restrictions

Linear interpolation with 3 axes may not be executed in the case below.

■ 「Sub axis setting」Error (error code : 253)

- 「Sub axis setting」of main axis operating data is “Axis-undecided”
- 「Sub axis setting」of main axis operating data is the same as main axis no.
- 「Sub axis setting」of main axis operating data exceeds the settable axis no. of module now using

■ If only one axis is set as sub axis, execute “linear interpolation control with 2 axes”.

(d) Setting example of operating data

Setting items	Main-axis setting (axis1)	Sub-axis setting(axis2)	Sub-axis setting(axis3)	Description
Control method	Absolute, Linear interpolation	- *1	- *1	When linear interpolation control is executed by the method of absolute coordinates, set「Absolute, Linear interpolation」on the main axis
Operating method	Singular, End	-		Set the operating method to execute linear interpolation
Goal position [pls]	5000	6000	4000	Set the goal position to position on main-axis and sub-axis
Operating speed [pls/s]	1000	-		Use speed-designated method of main axis for linear interpolation
Acc. no.	No.1	-		Set acc. no. for acceleration (no.1 ~ no.4)
Dec. no.	No.2	-		Set dec. no. for deceleration. (no.1 ~ no.4)
M code	0	-		When need to execute auxiliary work synchronizing with linear interpolation
Dwell time	500	-		Set dwell time(ms) to outputting the signal positioning completion
Sub-axis setting	Axis2, Axis3	-		Set an axis to be used as sub-axis among settable axis in operating data of main-axis

- *1 : It does not need to be set. Whatever value is set as, it does not affect linear interpolation.

Note

Linear interpolation control is executed on the basis of operating data of main axis.
Only 「Goal position」 item of sub-axis setting affect linear interpolation. In other word, whatever value is set as, it does not affect the operation and errors do not arise.

[Example] axis1 is main axis, axis2 and axis3 are sub axis. Execute linear interpolation by the setting as follows.

■ Starting position (2000, 1000, 1000), Goal position (5000, 6000, 4000)

In this condition, the operation is as follows.

■ Setting example of XG-PM

▪ Operating data of main-axis(axis1)

Step no.	Control method	Operating method	Goal position [pls]	Operating speed [pls/s]	Acc. no.	Dec. no.	M code	Dwell time	Sub axis setting
1	Absolute, Linear	Singular, End	5000	1000	No.1	No.1	0	100	Axis2

▪ Operating data of sub-axis1(axis2)

Step no.	Control method	Operating method	Goal position [pls]	Operating speed [pls/s]	Acc. no.	Dec. no.	M code	Dwell time	Sub axis setting
1	Absolute, Shortcut positioning control	Singular, End	6000	0	No.1	No.1	0	0	Axis-undecided

▪ Operating data of sub-axis2(axis3)

Step no.	Control method	Operating method	Goal position [pls]	Operating speed [pls/s]	Acc. no.	Dec. no.	M code	Dwell time	Sub axis setting
1	Absolute, Shortcut positioning control	Singular, End	4000	0	No.1	No.1	0	0	Axis-undecided

■ Operating pattern

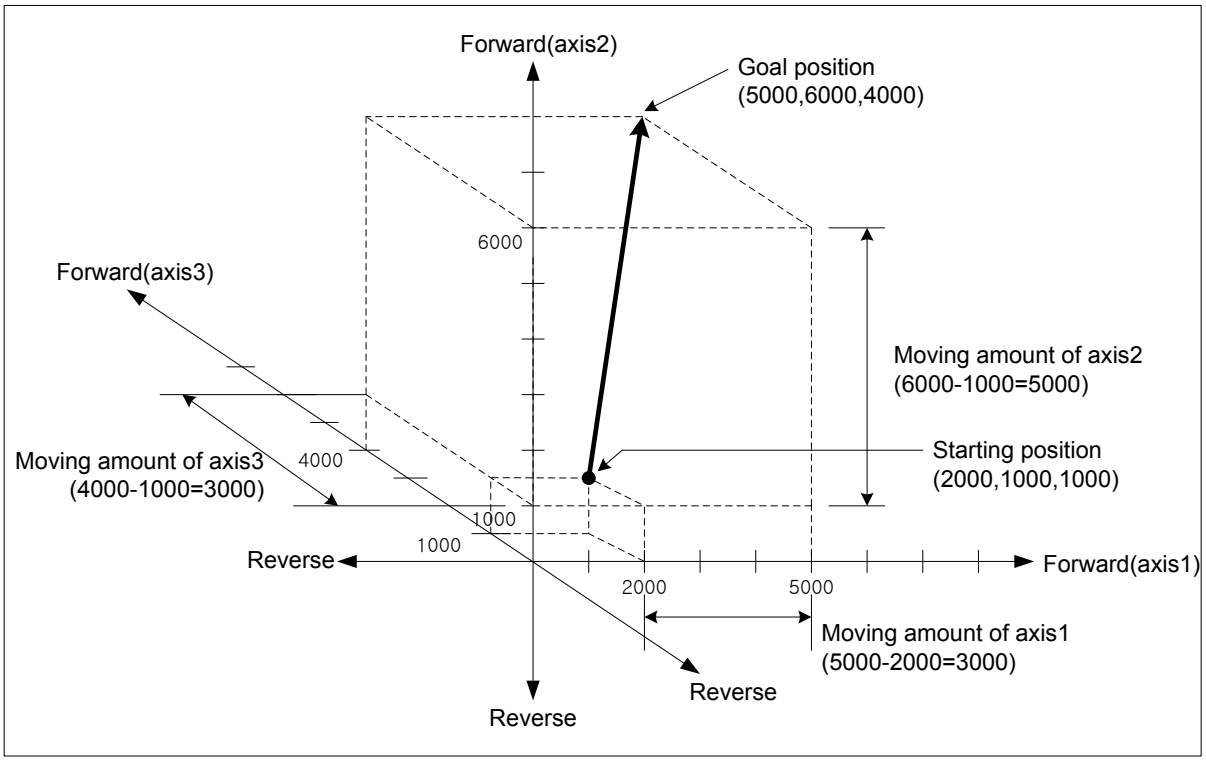

(2) Linear interpolation control with relative coordinates (「Relative, Linear Interpolation」)

(a) Execute 2 axes linear interpolation from starting position to the goal position. Positioning control is on basis of the current stop position.

(b) Moving direction depends on the sign of the goal position (Moving amount)

■ The sign is positive (+ or nothing) : Positioning operation in forward

■ The sign is negative (-) : Positioning operation in reverse

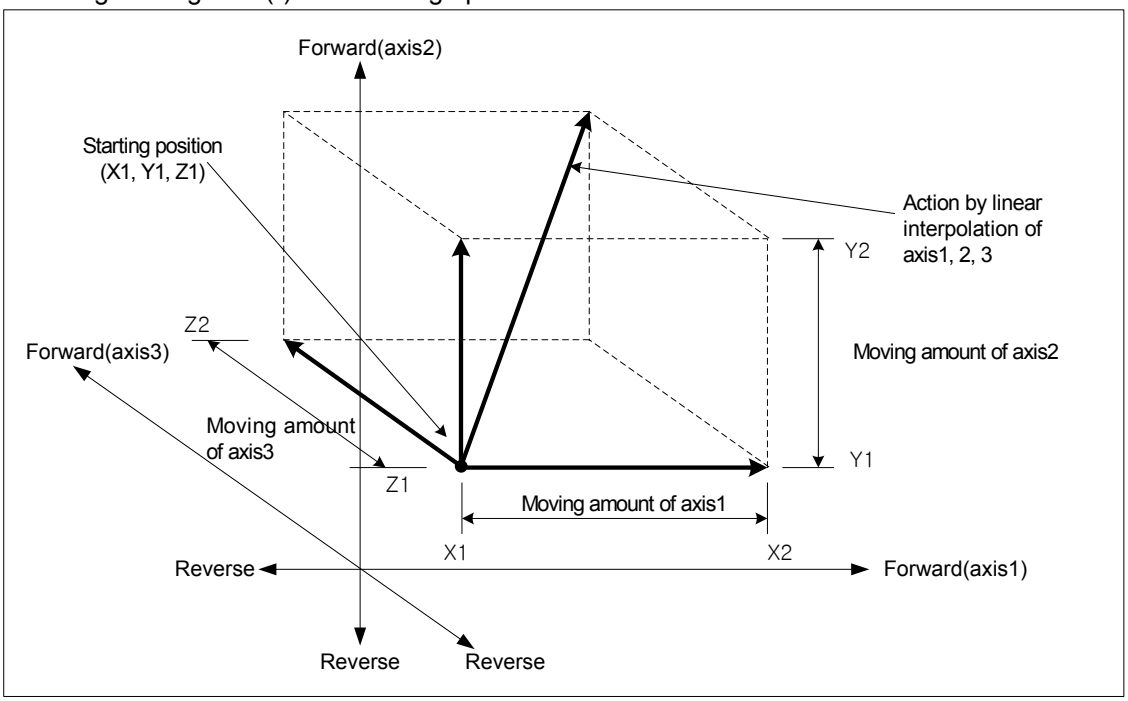

(c) Restrictions

Linear interpolation with 2 axes may not be executed in the case below.

■ 「Sub-axis setting」error (error code : 253)

- 「Sub-axis setting」value of main axis operating data is “Axis-undecided”
- 「Sub-axis setting」value of main axis operating data is same as the main axis no.
- 「Sub-axis setting」value of main axis operating data exceeds settable axis no.

■ If only one axis is set as sub axis, execute “linear interpolation control with 2 axes”.

(d) Setting example of operating data

Setting items	Main-axis setting (axis1)	Sub-axis setting(axis2)	Sub-axis setting(axis3)	Description
Control method	Absolute, Linear interpolation	- *1	- *1	When linear interpolation control is executed by the method of absolute coordinates, set「Absolute, Linear interpolation」on the main axis
Operating method	Singular, End	-		Set the operating method to execute linear interpolation
Goal position [pls]	5000	6000	4000	Set the goal position to position on main-axis and sub-axis
Operating speed [pls/s]	1000	-		Use speed-designated method of main axis for linear interpolation
Acc. no.	No.1	-		Set acc. no. for acceleration (no.1 ~ no.4)
Dec. no.	No.2	-		Set dec. no. for deceleration. (no.1 ~ no.4)
M code	0	-		When need to execute auxiliary work synchronizing with linear interpolation
Dwell time	500	-		Set dwell time(ms) to outputting the signal positioning completion
Sub-axis setting	Axis2, Axis3	-		Set an axis to be used as sub-axis among settable axis in operating data of main-axis

- *1 : It does not need to be set. Whatever value is set as, it does not affect linear interpolation.

Note

Linear interpolation control is executed on the basis of operating data of main axis.
Only 「Goal position」 item of sub-axis setting affect linear interpolation. In other word, whatever value is set as, it does not affect the operation and errors do not arise.

[Example] axis1 and axis2 are main and sub axis each. Execute linear interpolation by the setting as follows.

■ Starting position (2000, 1000, 1000), Goal position (5000, 6000, 4000)

In this condition, the operation is as follows.

■ Setting example of XG-PM

▪ Operating data of main-axis(axis1)

Step no.	Control method	Operating method	Goal position [pls]	Operating speed [pls/s]	Acc. no.	Dec. no.	M code	Dwell time	Sub axis setting
1	Absolute, Linear	Singular, End	5000	1000	No.1	No.1	0	100	Axis2

▪ Operating data of sub-axis1(axis2)

Step no.	Control method	Operating method	Goal position [pls]	Operating speed [pls/s]	Acc. no.	Dec. no.	M code	Dwell time	Sub axis setting
1	Absolute, Shortcut positioning control	Singular, End	6000	0	No.1	No.1	0	0	Axis-undecided

▪ Operating data of sub-axis2(axis3)

Step no.	Control method	Operating method	Goal position [pls]	Operating speed [pls/s]	Acc. no.	Dec. no.	M code	Dwell time	Sub axis setting
1	Absolute, Shortcut positioning control	Singular, End	4000	0	No.1	No.1	0	0	Axis-undecided

■ Operating pattern

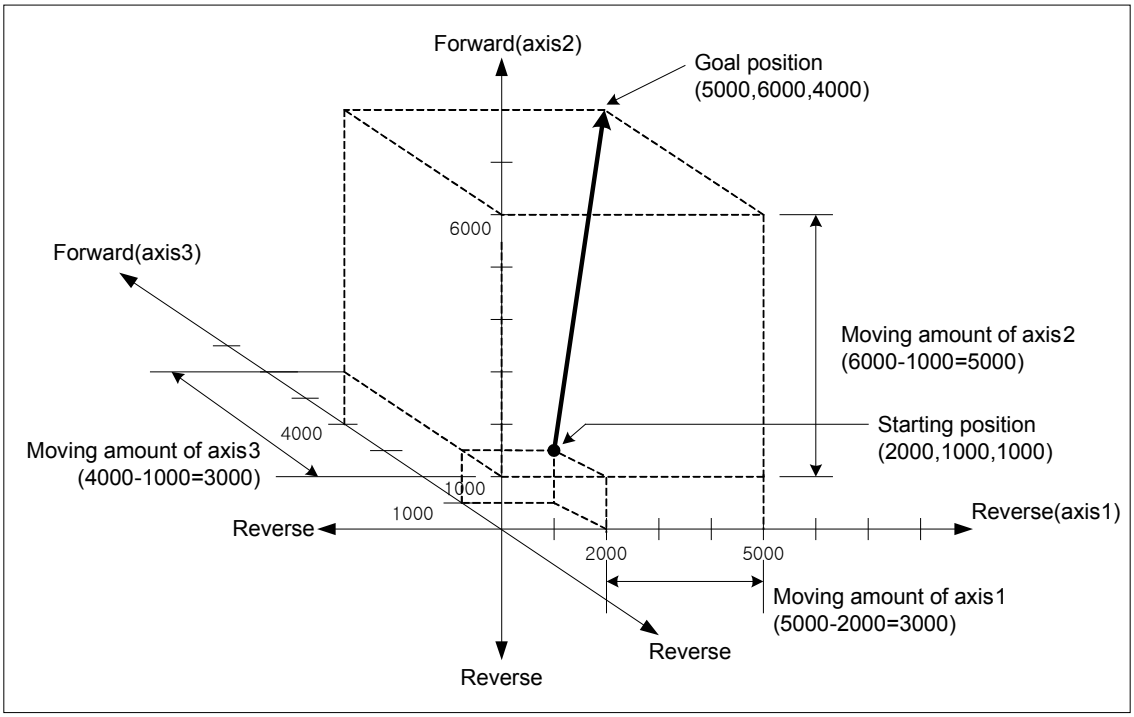

(3) Speed in 3 axes linear interpolation control

Operating speed in linear interpolation is according to the method of main-axis designating. After operating speed is set on command axis (main), the designated axis for interpolation is operated by APM module's calculating each moving amount. Speed of sub-axis and actual speed of machine are calculated as follows.

■ Speed in 3 axes linear interpolation

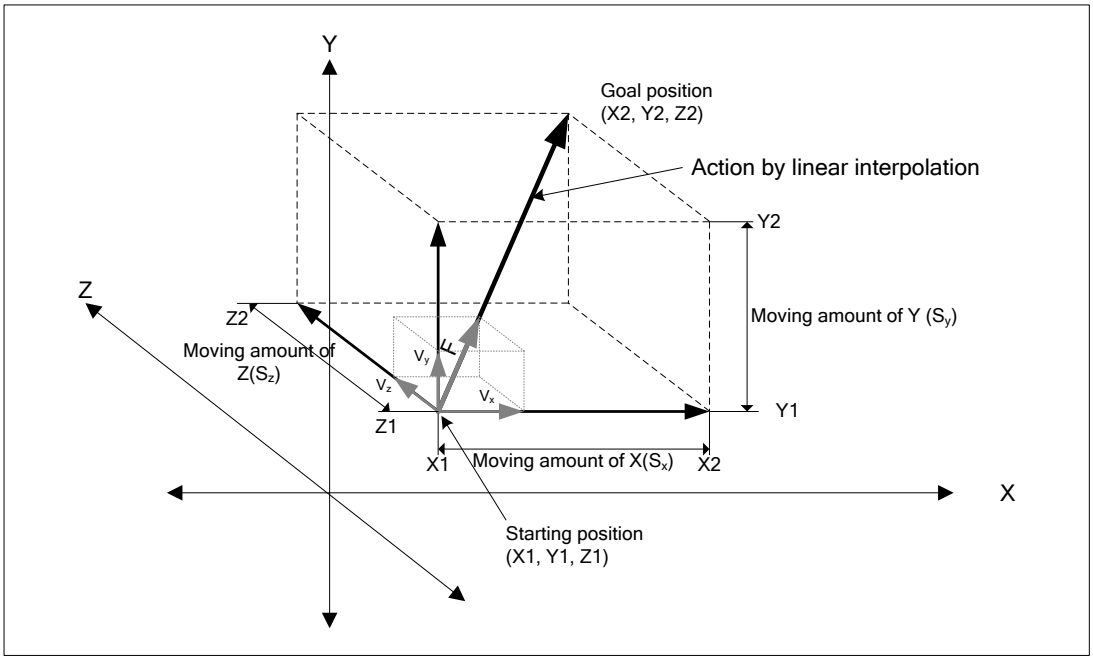

$$\text{Speed of sub}(V_y) = \text{Speed of main}(V_x) \times \frac{\text{Moving amount of Sub}(S_y)}{\text{Moving amount of Main}(S_x)}$$

$$\text{Speed of sub}(V_z) = \text{Speed of main}(V_x) \times \frac{\text{Moving amount of sub}(S_z)}{\text{Moving amount of main}(S_x)}$$

$$\text{Interpolating speed}(F) = \sqrt{V_x^{\,2} + V_y^{\,2} + V_z^{\,2}}$$

[Example]

■ Starting position (2000, 1000, 1000)

■ Goal position (6000, 5000, 6000)

■ Operating speed : 400 [pls/s]

Speed of sub-axis and interpolating speed are as follows.

Speed of sub-axis1 = $400 \times \frac{3000}{4000} = 300$ [pls/s]

Speed of sub-axis2 = $400 \times \frac{5000}{4000} = 500$ [pls/s]

Interpolating speed = $\sqrt{400^2 + 300^2 + 500^2} \approx 707$ [pls/s]

Note

(1) Speed limit for Sub-axis

When using linear interpolation control and moving distance of main < moving distance of sub, it is possible that sub-axis speed calculated by APM module exceeds 「Speed limit」 of basic parameter. In this case, error (error code : 261) arises and sub-axis speed is recalculated, then sub-axis continues to operate. To prevent that errors arise, operate it at the speed below limit.

(2) The speed when the distance main-axis moved is 0

When the distance main-axis moved is 0, the operating speed of main-axis operating data becomes actual interpolating speed.

In case of linear interpolation with more than 3 axes, the speed of sub-axis is calculated by the formula below.

$$Speed\ of\ sub-axis(V_y) = Interpolating\ speed(F) \times \frac{Moving\ amount\ of\ sub-axis(S_y)}{Merged\ moving\ amount\ (S_f)}$$

$$Speed\ of\ sub-axis(V_z) = Interpolating\ speed(F) \times \frac{Moving\ amount\ of\ sub-axis(S_z)}{Merged\ moving\ amount(S_f)}$$

9.2.8 Linear Interpolation Control with 4 axes

After executed by positioning operation start command (「Indirect start」, 「Synchronous start」), then executing interpolation control from starting position to the goal position with interpolation axis set as the main axis and sub axis.

Combination of interpolation axis is unlimited and maximum 4 axes linear interpolation control is available. Characteristics of action are same as linear interpolation control with 3 axes. For the details, refer to linear interpolation control with 3 axes.

(1) Linear interpolation control with absolute coordinates (「Absolute, Linear Interpolation」)

(a) Execute linear interpolation from starting position to the goal position designated on positioning data. Positioning control is on basis of the designated position from homing.

(b) The direction of movement depends on the starting position and the goal position for each axis.

- ■ Starting position < Goal position : Positioning operation in forward
- ■ Starting position > Goal position : Positioning operation in reverse

(2) Linear interpolation control with relative coordinates (「Relative, Linear Interpolation」)

(a) Execute 4 axes linear interpolation from starting position to the goal position. Positioning control is on basis of the current stop position.

(b) Moving direction depends on the sign of the goal position (Moving amount)

- ■ The sign is positive (+ or nothing) : Positioning operation in forward
- ■ The sign is negative (-) : Positioning operation in reverse

(3) Speed in 4 axes linear interpolation control

Operating speed in linear interpolation is according to the method of main-axis designating. After operating speed is set on command axis (main), the designated axis for interpolation is operated by APM module's calculating each moving amount. Speed of sub-axis and actual speed of machine are calculated as follows.

$$\text{Speed of sub-axis(axis2)}\ (V_2) = \text{Speed of main-axis}(V_1) \times \frac{\text{Moving amount of sub-axis}\ (S_2)}{\text{Moving amount of main-axis}\ (S_1)}$$

$$\text{Speed of sub-axis(axis3)}\ (V_3) = \text{Speed of main-axis}\ (V_1) \times \frac{\text{Moving amount of sub-axis}\ (S_3)}{\text{Moving amount of main-axis}(S_1)}$$

$$\text{Speed of sub-axis(axis4)}(V_4) = \text{Speed of main-axis}\ (V_1) \times \frac{\text{Moving amount of sub-axis}\ (S_4)}{\text{Moving amount of main-axis}(S_1)}$$

$$\text{Interpolating Speed}\ (F) = \sqrt{V_1^2 + V_2^2 + V_3^2 + V_4^2}$$

9.2.9 Designate Midpoint of Circular Interpolation

It was progressed by start command of positioning operation (「Indirect start」, 「direct start」) and operate interpolation following the path of circular which is through midpoint that is set by 2 axes.

And, Can progress circular interpolation of over 360 degrees by the set number of circular interpolation.

The combination of 2 axes for circular interpolation is unlimited. User can randomly use 2 axes from axis 1 to axis 4.

(1) Control of circular interpolation by absolute coordinate, designate midpoint (「Absolute, circular interpolation」)

(a) Operate circular interpolation from starting point and pass the midpoint that is set operation data to target point.

(b) To be made path of circular interpolation with start position, midpoint and a crossing which is perpendicular divide equally position of midpoint and target position.

(c) Movement direction is decided automatically depends on set target position and auxiliary point of circular interpolation.

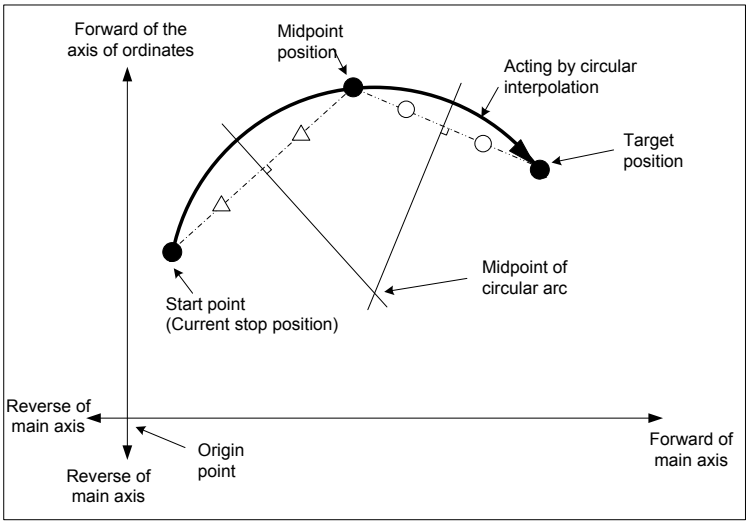

(d) Condition

■ User can't draw circle which is starting point same with last point on the circular interpolation of midpoint designation method. If you want to draw circle, please use method of midpoint.

■ User cannot progress circular interpolation of midpoint designation method with following cases.

▪ 「Sub axis setting」 disorder (Error code : 279)

- In case of the value of 「Sub axis setting」 of main axis operation data is no setting axis
- In case of the value of 「Sub axis setting」 of the main axis operation data same with the number of main axis,
- In case of value of「Sub axis setting」 of main axis operation data exceed the axis No. of module which is can set ,

▪ In case of "degree" is set as item of main axis or sub axis, (Error code : 282(Main axis), 283(Sub axis))

▪ Midpoint that is designated as auxiliary point same with start position or target position. (Error code : 284)

▪ In case of start position same with target position (Error code : 285)

▪ In case of calculated radius of circular arc exceed 2147483647pls (Error code : 286)

▪ In case of auxiliary position and target position in a straight line from start position, (Error code : 287)

Note

Have to be careful, because 2 axes work both in the circular interpolation maneuver.
(1) Available auxiliary operation is as follows ;
▪ Speed override, Deceleration stop, Emergency stop, Skip operation
(2) Operation of circular interpolation unavailable command is as follows ;
▪ Position/Speed conversion control, Position override, Continuous operation
(3) The parameter item which is operated by set value of each axis is as follows ;
▪ amount of compensate of Backlash, high limit of software, low limit of software on the item of expansion parameter

(e) Example of setting operation data

Setting item	Main axis (axis1) setting	Sub axis (axis 2) setting	Contents
Control method	Absolute, circular interpolation	- *1	Set 「absolute, circular interpolation」on main axis, when control circular interpolation by absolute coordinates.
Operation method	Singleness, End	-	Set operation method for circular interpolation.
Target position [pls]	10000	0	Set the target position for positioning on the main axis and sub axis.
Operation speed [pls/s]	1000	-	Circular interpolation use method of designating composition speed
Acceleration speed	No.1	-	Set the acceleration time No. for acceleration. (No.1 ~ 4)
Deceleration speed	No.2	-	Set the deceleration time No. for deceleration. (No.1 ~ 4)
M code	0	-	Set it for progressing auxiliary operation depends on circular interpolation operation.
Dwell time	500	-	set the dwell time taken until plc outputs the signal which informs users of finishing the position decision
The axis of ordinates setting	Axis 2	-	Set axis as sub axis among settable axes of module which is using for now on the main axis operation data.
Circular interpolation Auxiliary point	5000	5000	Set midpoint for passing circular arc on the method of the designating midpoint.
Circular interpolation mode	Midpoint	-	In case of using the method of designating midpoint, set 「midpoint」on the main axis.
Circular interpolation The number of rotations	0	-	When user want to draw circle which is over 360 degrees, set the number of rotations of circular arc.
Helical interpolation	Do not use	-	In case of using circular interpolation, set 「Do not use」on the main axis.

- *1 : Do not need setting. Whatever you set, there is no effect to circular interpolation.

Note

The circular interpolation control of the method of designating midpoint operate by standards of set item on the operation data of main axis (command axis).
When circular interpolation operation of the method of designating midpoint, there is no effect except for「Target position」, 「Auxiliary point of circular interpolation」on the axis of setting. What ever you take for the value, there is no effect to operate, there is no error.

[Example] Operate circular interpolation of designating midpoint and absolute coordinate (main axis; axis 1, sub axis; axis 2)

■ In case of Start position (0, 0), Target position (10000, 6000), Auxiliary point (2000, 6000), operation is as follows;

■ Example of setting in the XG-PM

▪ Main axis(axis1) operation data

Step No.	Control Method	Operation method	Target position [pls]	Operation Speed [pls/s]	Acc. Speed	Dec. Speed	M code	Dwell time	Sub axis setting	Circular interpolation Auxiliary point	Circular interpolation mode	The number of rotations of Circular interpolation	Helical interpolation
1	Absolute, Circular interpolation	Singleness, End	13000	1000	No. 1	No. 1	0	100	Axis 2	10000	Midpoint	0	Do not use

▪ The axis(axis 2) of ordinates operation data

Step No.	Control Method	Operation method	Target position [pls]	Operation Speed [pls/s]	Acc. Speed	Dec. speed	M code	Dwell time	Sub axis setting	Circular interpolation Auxiliary point	Circular interpolation mode	The number of rotations of Circular interpolation	Helical interpolation
1	Absolute, Reduction positioning control	Singleness End	9000	0	No. 1	No. 1	0	0	Do not setting axis	7500	Midpoint	0	Do not use

■ Operation pattern

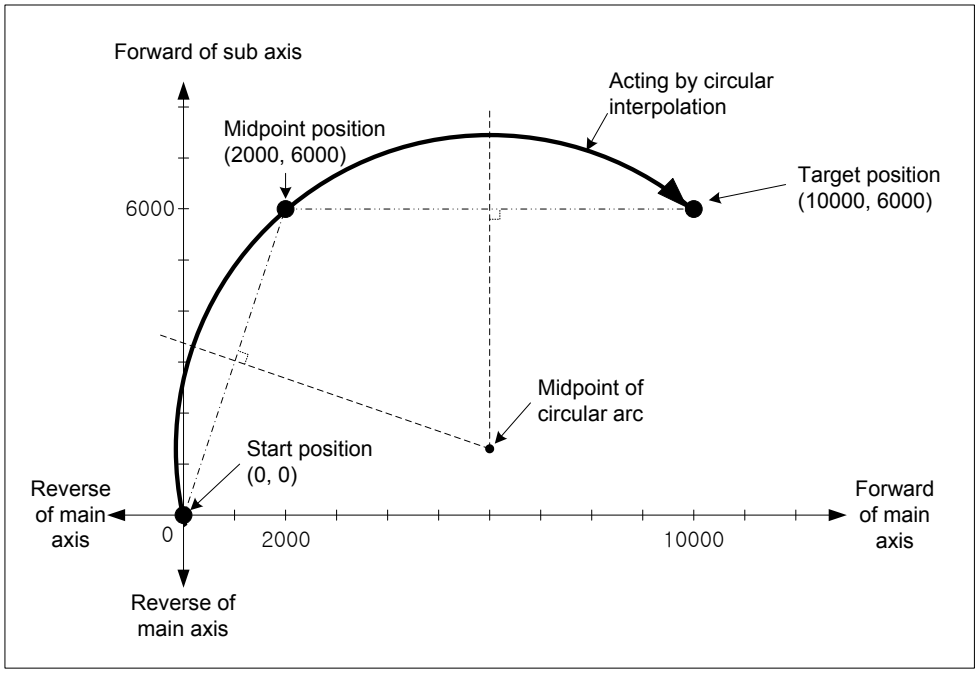

(2) Circular interpolation by relative coordinates, the method of designating midpoint
(「Relative, circular interpolation」)

(a) Operate circular interpolation from start position and go through midpoint to target position as amount of set movement.

(b) Midpoint position is the incremented position as set value on 「the circular interpolation auxiliary point」 from current stop position.

(c) The intersection of perpendicular bisectors of starting position and midpoint, the current stop position and the goal position will be the center-point of the arc.

(d) Movement direction is decided by set target position and circular interpolation auxiliary point.

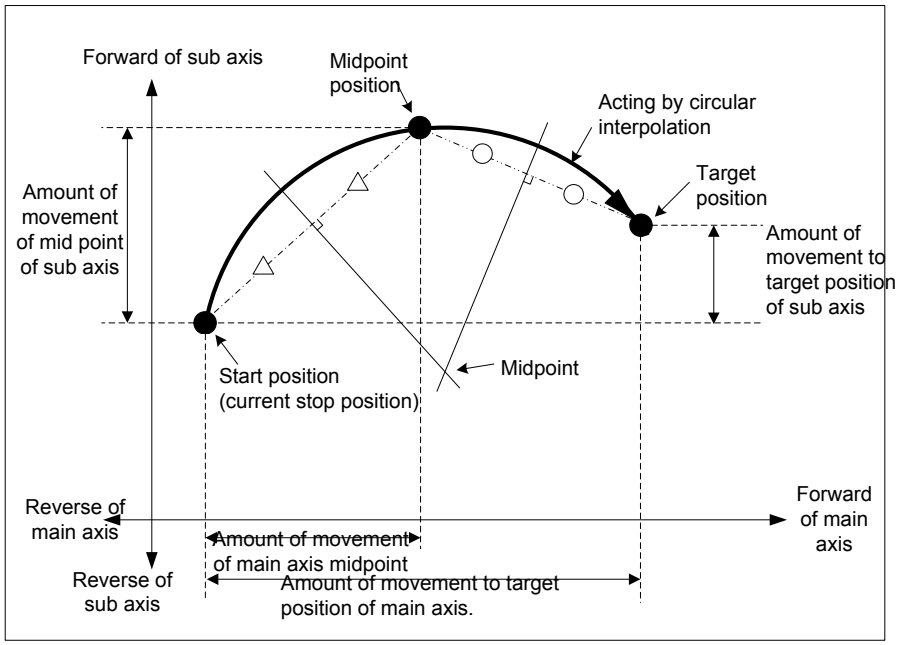

(e) Condition

■ Can not draw circle which starting point is the same with last point on the circular interpolation of the method of designating midpoint. When want to draw circle, should use midpoint method.

■ In this following case, it will be error and can not working circular interpolation of method of designating midpoint.

▪ 「Sub axis setting」 disorder (Error code : 279)

- It is axis-undecided that the value of sub axis of main axis operation data.
- The value of 「Sub axis setting」 of main axis operation data is set is same with main axis No.
- The value of 「Sub axis setting」 of main axis operation data exceed axis No. of settable module which is using.

▪ In case of “Degree” is set as control item of main/sub axis. (Error code : 282(Main axis), 283(Sub axis))

▪ In case of midpoint which is designated as auxiliary point is same with start position and target position. (Error code : 284)

▪ In case of start position same with target position. (Error code : 285)

▪ Radius of calculated circle exceed 2147483647pls (Error code : 286)

▪ Start position is in alignment with auxiliary position and target position. (Error code : 287)

(f) Example of operation data setting

Setting item	Main axis(axis 1) setting	Sub axis(axis 2) setting	Contents
Control method	Relative, Circular interpolation	- *1	When control circular interpolation by relative coordinates, set 「relative, circular interpolation」 on main axis.
Operation method	Singleness, End	-	Set operation method for circular interpolation.
Target position [pls]	10000	0	Set target position as a amount of increment of stop position for positioning on the main axis, sub axis.
Operation speed [pls/s]	1000	-	Circular interpolation use method of designating composition speed. Set composition speed on the main axis.
Acceleration speed	No.1	-	Set acceleration time No. for acceleration. (No.1 ~ No.4)
Deceleration speed	No. 2	-	Set deceleration time No. for deceleration. (No.1 ~ No.4)
M code	0	-	Set it when user wants to progress other auxiliary action with circular interpolation operation.
Dwell time	500	-	set the dwell time taken until plc outputs the signal which informs users of finishing the position decision
Sub axis setting	Axis 2	-	Set axis among the settable axes of current module on the main axis operation for sub.
Circular interpolation auxiliary point	5000	5000	Set the middle point that the arc with mid-point designating method would pass by as an increment from the current stop position
Circular interpolation mode	Midpoint	-	Set “midpoint”, when use method of designating midpoint.
The number of rotations of circular interpolation	0	-	Set the number of rotations for drawing circle that it is over 360 degrees.
Helical interpolation	Not use	-	Set “not use”, when use circular interpolation.

- *1 : Do not need setting. Whatever user set, there is no effect to circular interpolation.

Note

Circular interpolation of method of designating midpoint is depends on item that it is set on operation data of main axis (command axis).

There is no effect to circular interpolation operation except for 「Target position」and「Circular interpolation auxiliary point」, when operate circular interpolation of method of designating midpoint. Whatever user set, there is no effect and no error.

[Example] Operate circular interpolation of method of designating relative coordinate midpoint with axis 1 (main axis), with axis 2 (sub axis)

■ Start position : (1000, 1000)

Target position (amount of movement) setting : (8000, 4000)

Auxiliary point (amount of movement) setting : (5000, 5000)

In this case operation is as follows:

■ Example of setting XG-PM

▪ Main axis(axis 1) Operation data

Step No.	Control Method	Operation method	Target position [pls]	Operation Speed [pls/s]	Acc. Speed	Dec. Speed	M code	Dwell time	Sub axis setting	Circular interpolation Auxiliary point	Circular interpolation mode	The number of rotations of Circular interpolation	Helical interpolation
1	Relative, Circular interpolation	Singleness, End	8000	1000	No. 1	No. 1	0	100	Axis 2	5000	Midpoint	0	Do not use

▪ Sub axis(axis 2) Operation data

Step No.	Control Method	Operation method	Target position [pls]	Operation Speed [pls/s]	Acc. Speed	Dec. Speed	M code	Dwell time	Sub axis setting	Circular interpolation Auxiliary point	Circular interpolation mode	The number of rotations of Circular interpolation	Helical interpolation
1	Absolute, Reduction positioning control	Singleness, End	4000	0	No. 1	No. 1	0	0	Axis-undecided	5000	Midpoint	0	Do not use

■ Operation pattern

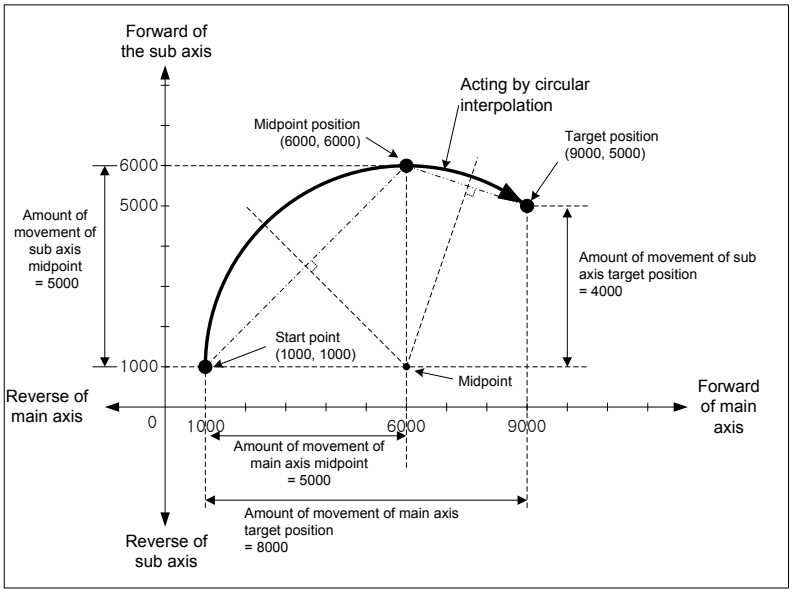

9.2.10 Circular interpolation control of designating midpoint

Operate interpolation up to trace of the circle after operate by starting command of positioning operation (「indirect start」, 「Start at a time」). And then, Midpoint is center of circle and it is move to rotation direction of circular interpolation.

「The number of rotations of circular interpolation」can operate circular interpolation which is over 360 degrees with setting value.

There is no limit for composition of axis 2 that it needs to use circular interpolation control. User can select 2 axes from axis1 to axis 4 randomly.

(1) Circular interpolation by method of absolute coordinate, designating midpoint (「Absolute, Circular interpolation」)

(a) Operate from start position and circular interpolate to target position with the trace of circle. And the circle has radius which distance is to set midpoint position. 「Circular interpolation auxiliary point」is midpoint of this circle.

(b) Moving direction depends on set direction on “circular interpolation mode” of operation data.

- 「Midpoint, CW」 - Circular interpolation go clockwise from current position.
- 「Midpoint, CCW」- Circular interpolation go counterclockwise from current position.

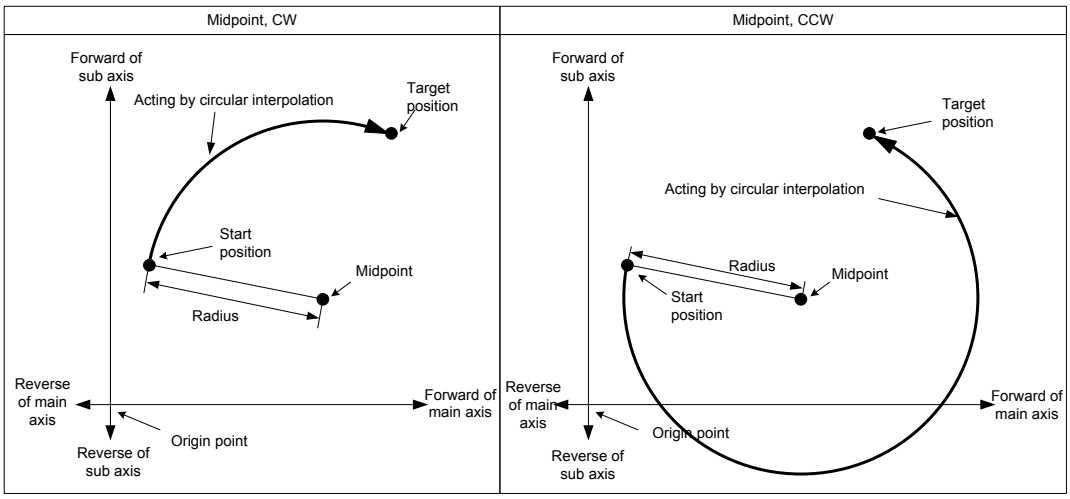

(c) If target position is same with start position, can progress circular interpolation. And the circle radius is distance from midpoint to starting position (=target position)

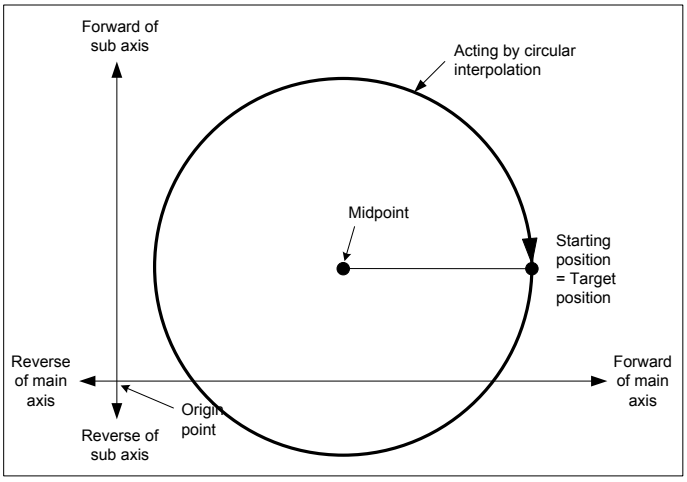

(d) Condition

■ In this following case, to be error and can not progress circular interpolation control of method of designating midpoint.

▪ 「Sub axis setting」disorder (Error code : 279)

- In case of the value of「Sub axis setting」of main axis operation data is “axis-undecided”,
- In case of the value of「Sub axis setting」of main axis operation data is same with main axis No. by setting.
- In case of the value of「Sub axis setting」of main axis operation data exceed settable axis No. of current using module.

▪ In case of “degree” is set as item of main/sub axis control, (Error code : 282(Main axis), 283(Sub axis))

▪ In case of midpoint which is set as auxiliary point is same with starting/target position, (Error code : 284)

▪ In case of calculated radius of circle exceed 2147483647pls, (Error code : 286)

Note

Should be careful during starting circular interpolation, because 2 axes act at a time.

1. Available auxiliary operation is as follows:
   ▪ Speed override, Deceleration stop, Emergency stop, Skip operation
2. Unavailable command with circular interpolation is as follows:
   ▪ Position/Speed conversion control, Position override, Consecutive operation
3. The parameter item that it is operated by set value each axes is as follows:
   ▪ Amount of backlash compensation of expansion parameter item, Software high limit, Software low limit

(e) Example of operation data setting

Setting item	Main axis(axis1) setting	Sub axis(axis2) setting	Contents
Control method	Absolute, Circular interpolation	- *1	When control circular interpolation by relative coordinates, set 「relative, circular interpolation」 on main axis.
Operation method	Singleness, End	-	Set operation method for circular interpolation.
Target position [pls]	10000	0	Set target position as a amount of increment of stop position for positioning on the main axis, sub axis.
Operation speed [pls/s]	1000	-	Circular interpolation use method of designating composition speed. Set composition speed on the main axis.
Acceleration speed	No.1	-	Set acceleration time No. for acceleration. (No.1 ~ No.4)
Deceleratio n speed	No.2	-	Set deceleration time No. for deceleration. (No.1 ~ No.4)
M code	0	-	Set it when user wants to progress other auxiliary action with circular interpolation operation.
Dwell time	500	-	set the dwell time taken until plc outputs the signal which informs users of finishing the position decision
Sub axis setting	Axis 2	-	Set axis among the settable axes of current module on the main axis operation for sub.
Circular interpolation auxiliary point	5000	-5000	Set the center-point on the method of designating center-point.
Circular interpolation mode	Midpoint, CW	-	In case of using the method of designating center-point, set the 「center-point, CW」 or 「center-point, CCW」 by moving direction of circular arc.
The number of rotations of circular interpolation	0	-	Set the number of rotations for drawing circle that it is over 360 degrees.
Helical interpolation	Not use	-	Set “not use”, when use circular interpolation.

- *1 : Do not need setting. Whatever user set, there is no effect to circular interpolation.

Note

Circular interpolation of method of designating midpoint is depends on item that it is set on operation data of main axis (command axis).
There is no effect to circular interpolation operation except for 「Target position」 and 「Circular interpolation auxiliary point」, when operate circular interpolation of method of designating midpoint. Whatever user set, there is no effect and no error.

[Example] Operate circular interpolation of designating midpoint and absolute coordinate (main axis; axis 1, sub axis; axis 2)

■ In case of Start position (0, 0), Target position (0, 0), Auxiliary point (1000, 1000), direction of rotation :CW operation is as follows;

■ Example of setting in the XG-PM

▪ Main axis(axis1) operation data

Step No.	Control Method	Operation method	Target position [pls]	Operation Speed [pls/s]	Acc. Speed	Dec. Speed	M code	Dwell time	Sub axis setting	Circular interpolation Auxiliary point	Circular interpolation mode	The number of rotations of Circular interpolation	Helical interpolat i-on
1	Absolute, Circular interpolati on	Singlenes s, End	0	1000	No. 1	No. 1	0	100	Axis 2	1000	Centerpoint ,CW	0	Do not use

▪ Sub axis(axis 2) operation data

Step No.	Control Method	Operation method	Target osition [pls]	Operati on Speed [pls/s]	Acc. Speed	Decel- eration Speed	M code	Dwell time	Sub axis setting	Circular interpolation Auxiliary point	Circular Interpolation mode	The number of rotations of Circular interpolation	Helical interpo l-ation
1	Absolute, Reduction positioning control	Singleness , End	0	0	No.1	No.1	0	0	Axis- undecided	1000	Centerpoint	0	Do not use

■ Operation pattern

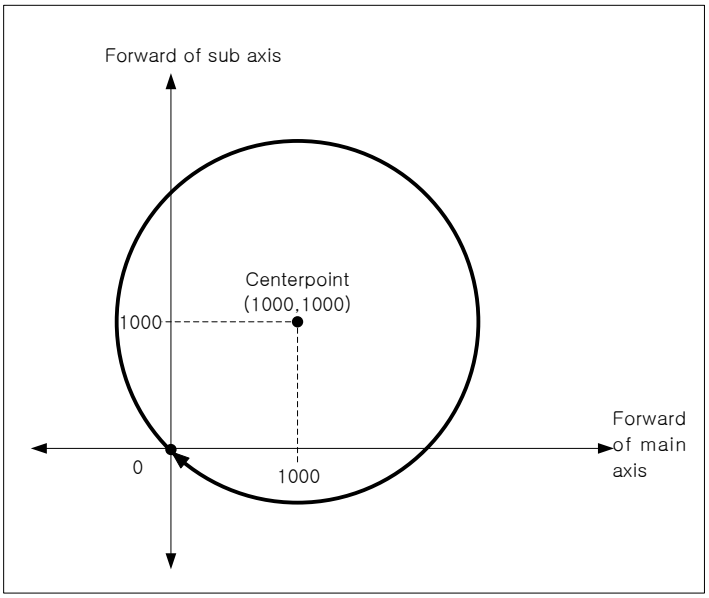

(2) Circular interpolation control by the method of relative coordinate, designating center-point (「Relative, Circular interpolation」)

(a) Start operating at starting position and then execute circular interpolation by moving amount already set, along the trace of the arc which has a distance between starting position and designated mid-point as radius. 「Circular interpolation auxiliary point」 means the moving amount between the current position and mid-point.

(b) Moving direction is decided to set direction on “circular interpolation mode” of operation data.

- 「Center-point, CW」 - Circular interpolation go clockwise from current position..
- 「Center-point, CCW」- Circular interpolation go counterclockwise from current position.

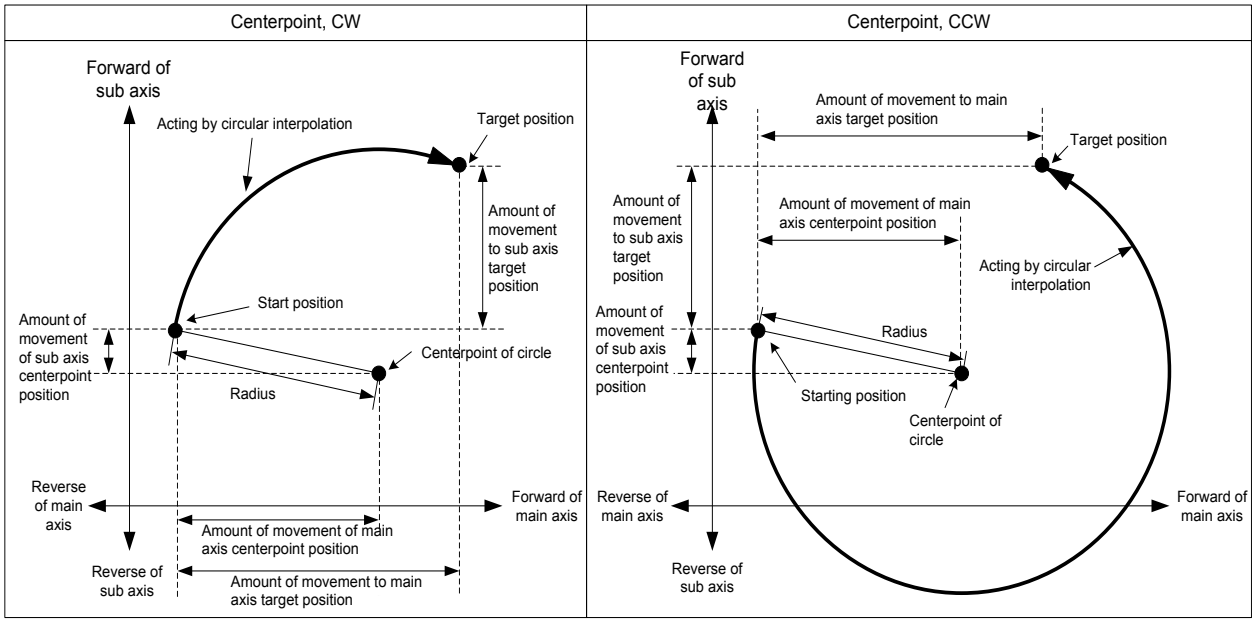

(c) If set target position of main axis and sub axis as “0”, than starting position will be same with target position and can progress circular interpolation that it is drawing circle. The radius of the circle is distance from starting position to center-point.

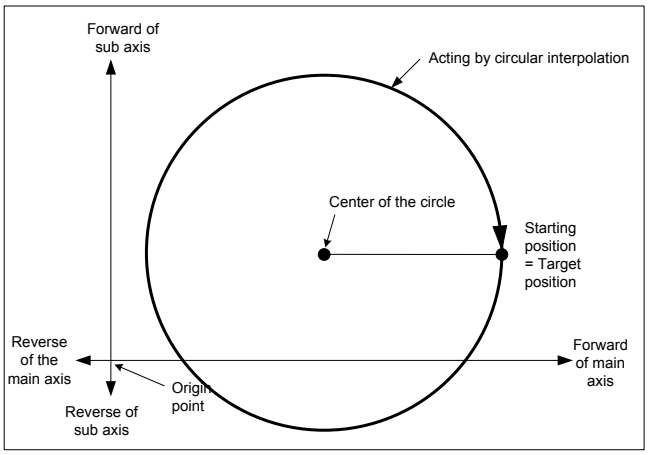

(d) Condition

■ User cannot progress circular interpolation of midpoint designation method with following cases.

▪「Sub axis setting」disorder (Error code: 279)

- In case of the value of 「Sub axis setting」 of main axis operation data is no setting axis,
- In case of the value of 「Sub axis setting」 of the main axis operation data same with the number of main axis,
- In case of value of「Sub axis setting」 of main axis operation data exceed the axis No. of module which is can set ,

▪ In case of "degree" is set as item of main axis or sub axis, (Error code: 282(Main axis), 283(Sub axis))

▪ Midpoint that is designated as auxiliary point same with start position or target position. (Error code: 284)

▪ In case of start position same with target position (Error code: 285)

▪ In case of calculated radius of circular arc exceed 2147483647pls (Error code: 286)

(e) Example of operation data setting

Setting item	Main axis(axis1) setting	Sub axis(axis2) setting	Contents
Control method	Relative, Circular interpolation	- *1	When control circular interpolation by relative coordinates, set 「relative, circular interpolation」on main axis.
Operation method	Singleness, End	-	Set operation method for circular interpolation.
Target position [pls]	10000	0	Set target position as the amount of increment of stop position for positioning on the main axis, sub axis.
Operation speed [pls/s]	1000	-	Circular interpolation use method of designating composition speed. Set composition speed on the main axis.
Acceleration speed	No.1	-	Set acceleration time No. for acceleration. (No.1 ~ No.4)
Deceleration speed	No.2	-	Set deceleration time No. for deceleration. (No.1 ~ No.4)
M code	0	-	Set it when users want to progress other auxiliary action with circular interpolation operation.
Dwell time	500	-	set the dwell time taken until plc outputs the signal which informs users of finishing the position decision
Sub axis setting	Axis 2	-	Set axis among the settable axes of current module on the main axis operation for sub.
Circular interpolation auxiliary point	5000	-5000	Set the center-point position by amount of increment of current stop position on the method of designating center-point.
Circular interpolation mode	Midpoint, CW	-	In case of using the method of designating center-point, set the 「center-point, CW」or 「center-point, CCW」 by moving direction of circular arc.
The number of rotations of circular interpolation	0	-	Set the number of rotations for drawing circle that it is over 360 degrees.
Helical interpolation	Not use	-	Set "not use", when use circular interpolation.

- *1 : Do not need setting. Whatever user set, there is no effect to circular interpolation.

Note

Circular interpolation of method of designating midpoint is depends on item that it is set on operation data of main axis command axis).
There is no effect to circular interpolation operation except for 「Target position」and「Circular interpolation auxiliary point」, when operate circular interpolation of method of designating midpoint. Whatever user set, there is no effect and no error.

[Example] Operate circular interpolation of the method of designating relative coordinate centerpoint with axis 1 (main axis), with axis 2 (sub axis)

■ Start position: (0, 0)

Target position (amount of movement) setting: (2000, 0)

Auxiliary point (amount of movement) setting: (1000, 0)

Direction of rotations: CW

In this case operation is as follows:

■ Example of setting XG-PM

▪ Main axis (axis 1) Operation data

Step No.	Control Method	Operation method	Target position [pls]	Operation Speed [pls/s]	Acc. Speed	Dec. Speed	M code	Dwell time	Sub axis setting	Circular interpolation Auxiliary point	Circular Interpolation mode	The number of rotations of Circular interpolation	Helical Interpolation
1	Relative, Circular interpolation	Singleness, Continue	2000	1000	No. 1	No. 1	0	100	Axis 2	1000	Center-point ,CW	0	Do not use
1	Relative, Circular interpolation	Singleness, End	2000	1000	No. 1	No. 1	0	100	Axis 2	1000	Center-point ,CW	0	Do not use

▪ Sub axis (axis 2) Operation data

Step No.	Control Method	Operation method	Target position [pls]	Operation Speed [pls/s]	Acc. Speed	Dec. Speed	M code	Dwell time	Sub axis setting	Circular interpolation Auxiliary point	Circular Interpolation mode	The number of rotations of Circular interpolation	Helical interpolation
1	Absolute, Reduction positioning control	Singleness, End	0	0	No. 1	No. 1	0	0	Axis-undecided	0	Midpoint ,CW	0	Do not use
1	Absolute, Reduction positioning control	Singleness, End	0	0	No. 1	No. 1	0	0	Axis-undecided	0	Midpoint ,CW	0	Do not use

■ Operation pattern

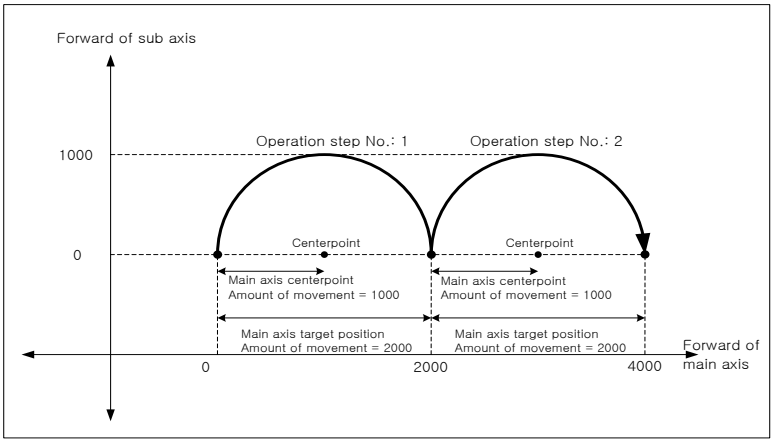

(3) Circular interpolation control which radius of starting point is different with radius of ending point.

(「Relative, Circular interpolation」)

(a) According to set value of target position, distance A which it is distance from start point to center point is different with distance B which it is distance from target position to center point (End point, Radius) on circular interpolation control of the method of designating center point. Sometimes do not operate normally. When starting point radius have difference with end point radius, calculate each speed on the set operation speed, and operate circular interpolation control with compensating radius.

(b) In case of starting point radius has some difference with ending point radius, compensating speed is as follows:

- Radius of starting point > Radius of ending point: The more near from target position, the slower.
- Radius of starting point < Radius of ending point: The more near from target position, the faster.

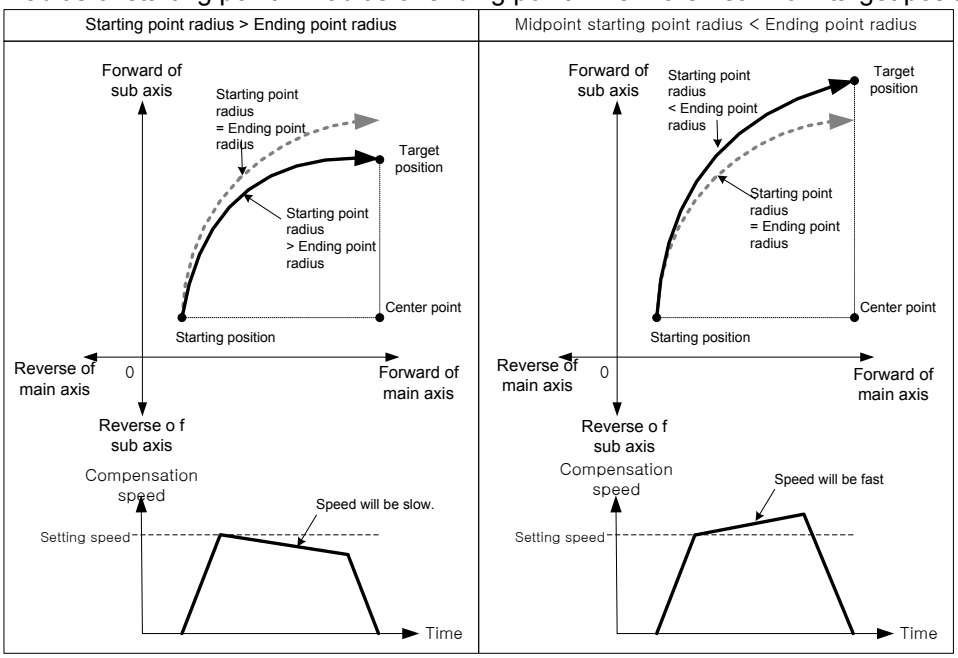

Note

In case of "Starting point radius < Ending point radius", the more operate circular interpolation, the faster. Sometimes exceed 「Speed limit」of parameter. When operate circular interpolation, in case of starting point radius shorter than ending point radius, lower speed for never exceeding「Speed limit」.
Can operate no exceed 「Speed limit」, even if it is near to target position.

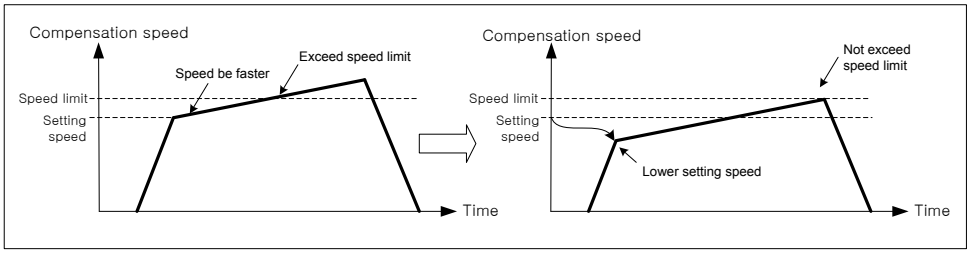

(4) Absolute coordinate function of the number of circular interpolation's rotation

(a) In case of circular interpolation setting exceed 1 on circular interpolation control of the method of absolute coordinate, designating center point. To set of the number of circular interpolation's rotations operate the number of rotations at the absolute coordinate of first start.

(b) Even if decelerate and stop, operate origin circular interpolation by restart.

(c) Condition

In this following case position is changed after deceleration stop command. The number of circular interpolation's rotation is not the number of absolute rotations. It operate by the number of relative rotations.

- After operate positioning command except for current step indirect start (Directing start, Jog operation, Inching operation, Sync. operation, etc),
- After progress position changing command,

[Example] Progress circular interpolation that is the method of absolute, designating center point. And then axis 1 is main axis, axis 2 is sub axis.

■ In this case of Starting position (100, 500), Target position (400, 500), Auxiliary position (600, 500), Direction of rotations: CW, operating is as follows:

■ Example of setting XG-PM

- Main axis (axis 1) operation data

Step No.	Control Method	Operation method	Target position [pls]	Operation Speed [pls/s]	Acc. Speed	Dec. Speed	M code	Dwell time	Sub axis setting	Circular interpolation Auxiliary point	Circular Interpolation mode	The number of rotations of Circular interpolation	Helical interpolation
1	Absolute, circular interpolation	Singleness, End	600	1000	No.1	No.1	0	100	Axis 2	600	Midpoint ,CW	3	Do not use

- Sub axis (axis 2) operation data

Step No.	Control Method	Operation method	Target position [pls]	Operation Speed [pls/s]	Acc. Speed	Dec. Speed	M code	Dwell time	Sub axis setting	Circular interpolation Auxiliary point	Circular Interpolation mode	The number of rotations of Circular interpolation	Helical interpolation
1	Absolute, Reduction positioning control	Singleness, End	300	0	No.1	No.1	0	0	Axis-undecided	500	Midpoint	0	Do not use

■ Operation pattern

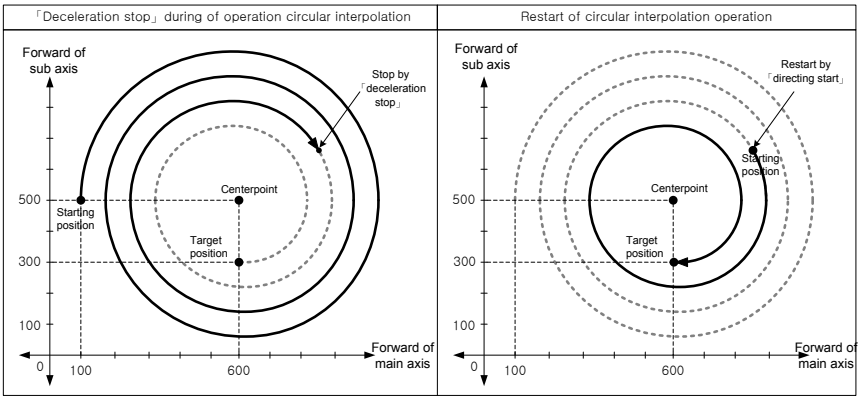

When decelerating in circular interpolation by dec. stop command and restart the same step no., not that executing circular interpolation after circular interpolation being executed 3 times, but that positioning at the goal position after going around 1 time, because 2 times of circular interpolation was executed in former operation.

9.2.11 Circular interpolation control with designated radius

After being executed by positioning operation start (「Indirect start」, 「Sync. start」), then it operates along the trace of the circle made by circular interpolation with 2 axes. According to「The turn no. of circular interpolation」, circular interpolation which is bigger than 360° is available to be executed.

Combination of 2 axes for a circular interpolation is not limited. User may use any 2 axes from aixs1 ~ axis4.

(1) Circular interpolation by method of absolute and designating radius (「Absolute, Circular interpolation」)

(a) Start operating at starting position and execute circular interpolation along the trace of the circle which has radius set on circular interpolation auxiliary point of main-axis operating data. Center point of Circular arc depends on the turning direction (CW, CCW) of「Circular interpolation mode」 and size setting of circular arc (Circular arc<180°, Circular arc>=180°).

Circular interpolation mode	Description
Radius, CW, Arc<180°	Execute circular interpolation in clockwise and the arc is smaller than 180°
Radius, CW, Arc>=180°	Execute circular interpolation in clockwise and the arc is bigger than 10°
Radius, CCW, Arc<180°	Execute circular interpolation in counterclockwise and the arc is smaller than 180° or same.
Radius, CCW, Arc>=180°	Execute circular interpolation in counterclockwise and the arc is bigger than 180° or same.

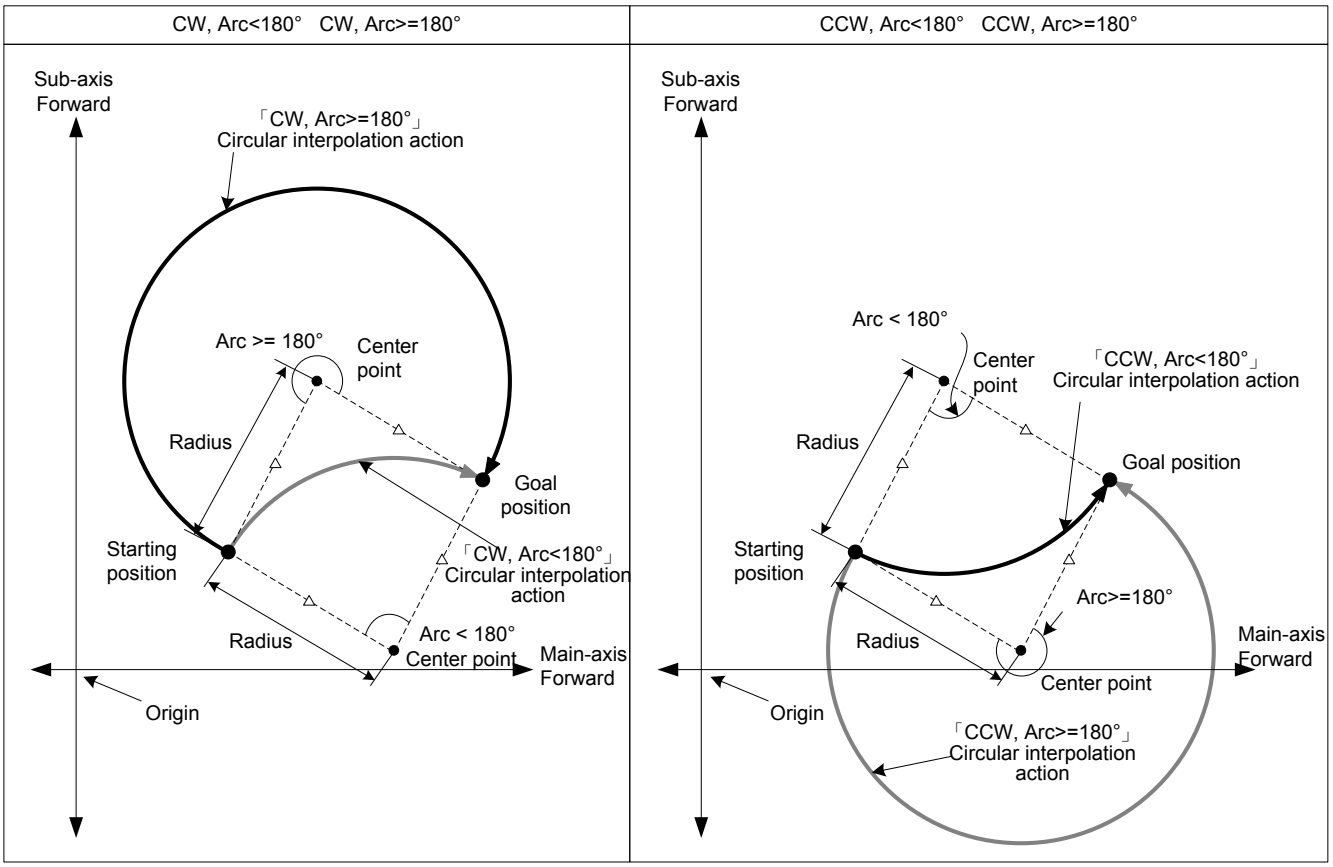

(b) Restrictions

■ Circular interpolation with designating radius method may not draw an exact circle that the starting position and ending position are same. If user wants to draw an exact circle, use circular interpolation with center point method.

■ In the cases below, error would arise and circular interpolation may not be executed.

▪「Sub-axis setting」error (error code:279)

- Value of 「Sub-axis setting」is “Axis-undecided”
-「Sub axis setting」of main axis operating data is the same as main axis no.
-「Sub axis setting」of main axis operating data exceeds the settable axis no. of module now using.

▪ Control unit of main or sub axis is set as “degree”. (error code : 282(main), 283(sub))

▪ Starting position and goal position are same (error code:285)

▪ Radius value of circular interpolation of main-axis operating data is smaller than half of the length from starting position to goal position

- Radius < (R x 0.8) : Error (error code:270)
- (R x 0.8) <= Radius < R

: Execute circular interpolation after reset the radius to R. In other words, execute circular interpolation by setting the center of the line from starting position to goal position as center point.

Note

If executing circular interpolation start, 2 axes will operate at the same time. Need user to pay attention.
(1) Auxiliary operations may be used are as follows.
▪ Speed override, Dec. stop, Emergent stop, Skip operation.
(2) The commands may not be used in circular interpolating operation are as follows.
▪ Position/Speed switching control, Position override, Continuous operation
(3) The parameter items operating by standards of each axis are as follows.
▪ Amount of backlash revision in extended parameter items, Software high limit, Software low limit

(c) Setting example of Operating data

Items	Main-axis setting	Sub-axis setting	Description
Control Method	Absolute, Circular interpolation	- *1	When executing circular interpolation with absolute coordinates, set「Absolute, Circular interpolation」on main
Operating Method	Singular, End	-	Set the method to execute circular interpolation
Goal position[pls]	10000	0	Set the goal position to execute on Main, Sub, Helical axis
Operating speed[pls/s]	1000	-	Use connecting speed designation method for circular interpolation. Set connecting speed on main-axis
Acc. no.	No.1	-	Set no. of acc. time to use in acceleration (no1~4)
Dec. no.	No.2	-	Set no. of dec. time to use in deceleration (no1~4)
M code	0	-	Set it when executing another auxiliary operation synchronizing with circular interpolation
Dwell time	500	-	Set dwell time for outputting positioning complete
Sub-axis setting	Axis2	-	Set an axis to use as sub-axis among the axis available on main-axis operating data.
Auxiliary point	7000	-	Set the radius on main-axis
Circular interpolation	Radius, CW, Arc<180°	-	If use radius designation method, set「Radius」on main-axis and set moving direction of arc and size of arc
The No. of Turns	-	-	Set the no. of turns of arc for making a circle bigger than 360°
Helical	Not use	-	When using circular interpolation, set it to「Not use」

- *1 : It means that no need to be set. Whatever value it is, it dose not affect circular interpolation.

Note

(1) Circular interpolation control of Radius designation method is executed on the basis of the items set on operating data. When it is executed, only「Goal position」can affect circular interpolation. In other words, whatever value is set as, it does not affect the action and no errors arise.
(2) When setting the circular interpolating auxiliary point (radius) of main-axis, it must be bigger than the half of the length between starting position and goal position. If it is smaller than the half(R) and the value is higher than 80% of R, circular interpolation which has middle point between starting position and goal position as center-point is executed. If it is smaller than the half(R) and the value is lower than 80% of R, error (error code:270) arises and circular interpolation is not executed.

[Example] Axis1 is main-axis and Axis2 is sub-axis. Execute circular interpolation with relative

coordinates and designated radius.

■ Starting position (1000, 1000), Goal position (9000, 1000), Auxiliary point (5000, 0)

Moving direction of arc : CCW, Size of arc : Arc >= 180°

The action is as follows in the condition above

■ Setting example in XG-PM

▪ Main-axis(Axis1) Operating data

Step No.	Control method	Operation Method	Goal position [pls]	Operating speed [pls/s]	Acc. No,	Dec. No,	M Code	Dwell Time	Sub-axis Setting	Auxiliary Point	Circular interpolation mode	The no. of turns	Helical interpolation
1	Absolute, Circular interpolation	Singular, End	8000	1000	No.1	No.1	0	100	Axis2	5000	Radius, CW, Arc<180	0	Not use

▪ Sub-axis(Axis2) Operating data

Step No.	Control method	Operation Method	Goal position [pls]	Operating speed [pls/s]	Acc. No,	Dec. No,	M Code	Dwell Time	Sub-axis Setting	Auxiliary Point	Circular interpolation mode	The no. of turns	Helical interpolation
1	Absolute, shortcut position control	Singular, End	8000	1000	No.1	No.1	0	100	Axis2	5000	Radius, CW, Arc<180	0	Not use

■ Operation pattern

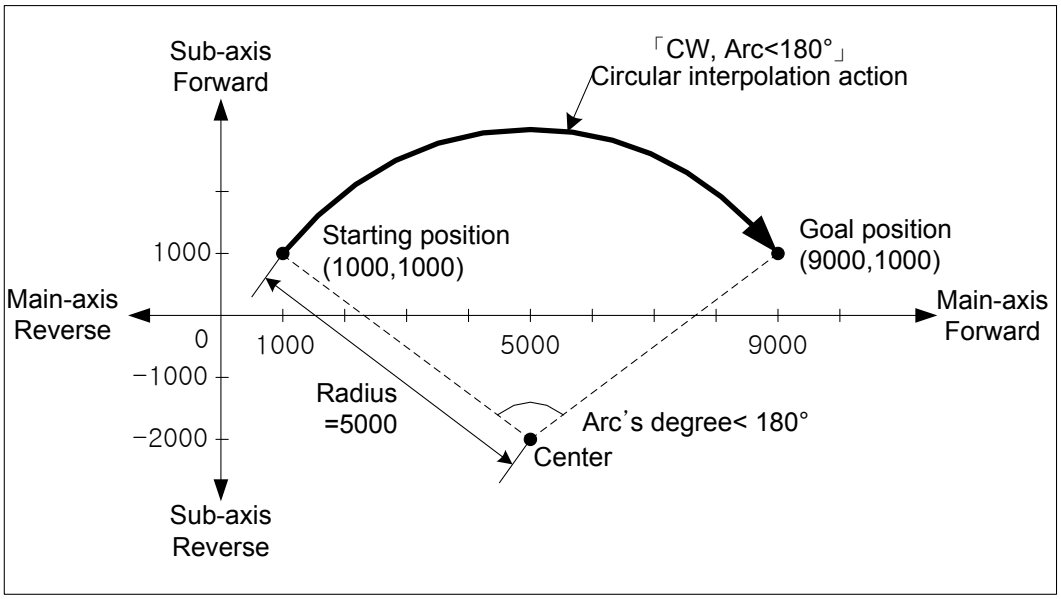

(2) Circular interpolation by method of relative and designating radius (「Relative, Circular interpolation」)

(a) Start operating from starting position and then execute circular interpolation by increment set on goal position along the trace of the circle which has the value set on circular interpolation auxiliary point of main-axis operation data as a radius. Circular arc depends on the moving direction of「Circular interpolation mode」(CW, CCW) and setting of arc size(Arc<180°, Arc>=180°)

Circular interpolation mode	Description
Radius, CW, Arc<180°	Execute circular interpolation with center-point of arc which smaller than 180°in direction of CW
Radius, CW, Arc >=180°	Execute circular interpolation with center-point of arc which bigger than 180°in direction of CW
Radius, CCW, Arc<180°	Execute circular interpolation with center-point of arc which smaller than 180°in direction of CCW
Radius, CCW, Arc>=180°	Execute circular interpolation with center-point of arc which bigger than 180°in direction of CWW

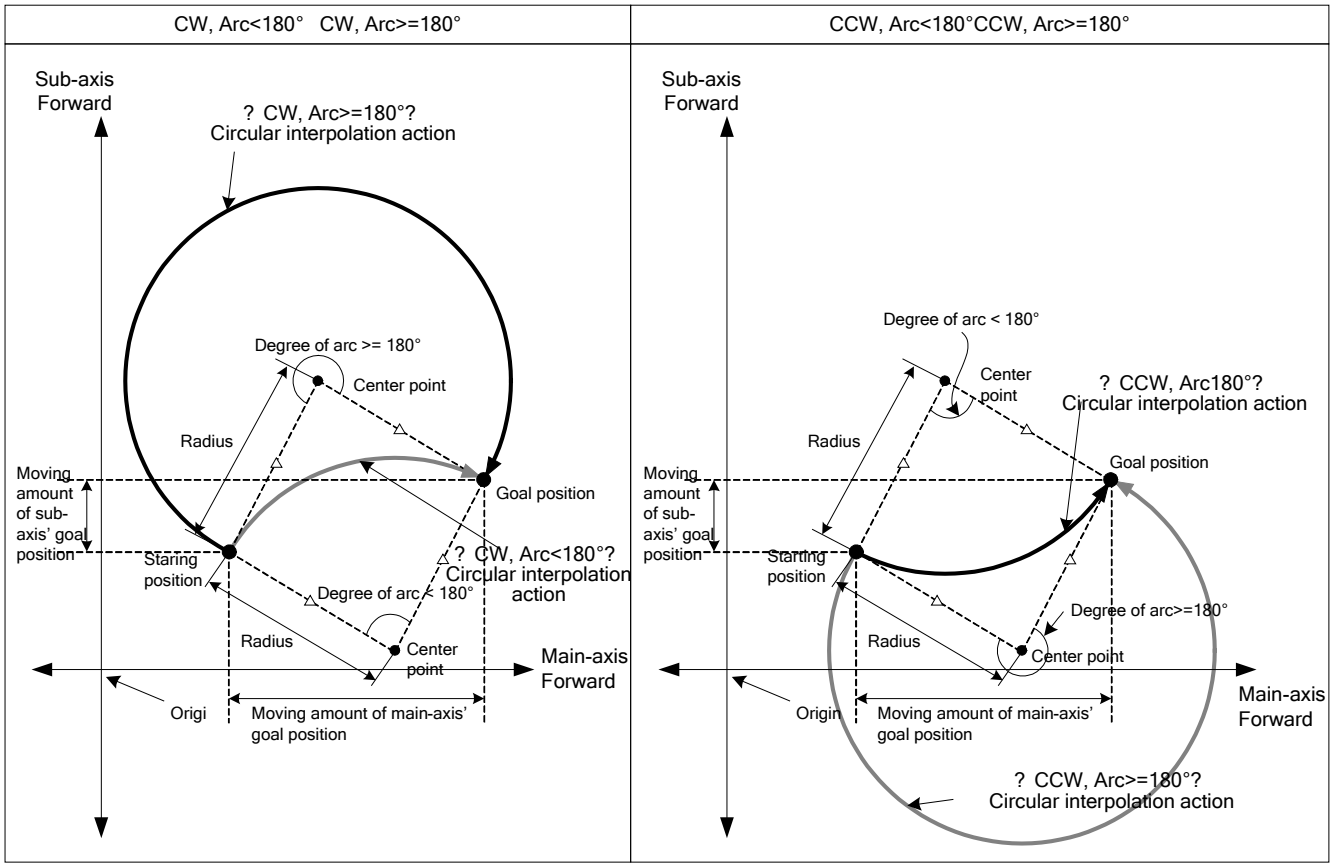

(b) Restrictions

■ Circular interpolation with designating radius method may not draw an exact circle that the starting position and ending position are same. If user wants to draw an exact circle, use circular interpolation with center point method.

■ In the cases below, error would arise and circular interpolation may not be executed.

▪「Sub-axis setting」error (error code: 279)

- Value of 「Sub-axis setting」is “Axis-undecided”
-「Sub axis setting」of main axis operating data is the same as main axis no.
-「Sub axis setting」of main axis operating data exceeds the settable axis no. of module now using.

▪ Control unit of main or sub axis is set as “degree”. (error code : 282(main), 283(sub))

▪ Starting position and goal position are same (error code: 285)

▪ Radius value of circular interpolation of main-axis operating data is smaller than half of the length from starting position to goal position

- Radius < (R x 0.8) : Error (error code: 270)
- (R x 0.8) <= Radius < R

: Execute circular interpolation after reset the radius to R. In other words, execute circular interpolation by setting the center of the line from starting position to goal position as center point.

(c) Setting example of Operating data

Items	Main-axis setting	Sub-axis setting	Description
Control Method	Relative, Circular interpolation	- *1	When executing circular interpolation with absolute coordinates, set「Relative, Circular interpolation」on main
Operating Method	Singular, End	-	Set the method to execute circular interpolation
Goal position[pls]	10000	0	Set the goal position to execute on Main, Sub, Helical axis
Operating speed[pls/s]	1000	-	Use connecting speed designation method for circular interpolation. Set connecting speed on main-axis
Acc. no.	No.1	-	Set no. of acc. time to use in acceleration (no1~4)
Dec. no.	No.2	-	Set no. of dec. time to use in deceleration (no1~4)
M code	0	-	Set it when executing another auxiliary operation synchronizing with circular interpolation
Dwell time	500	-	Set dwell time for outputting positioning complete
Sub-axis setting	Axis2	-	Set an axis to use as sub-axis among the axis available on main-axis operating data.
Auxiliary point	7000	-	Set the radius on main-axis
Circular interpolation	Radius, CW, Arc<180°	-	If use middle-point-designation method, set「Middle-point」on main-axis
The No. of Turns	-	-	Set the no. of turns of arc for making a circle bigger than 360°
Helical	Not use	-	When using circular interpolation, set it to「Not use」

- *1 : It means that no need to be set. Whatever value it is, it dose not affect circular interpolation.

Note

(1) Circular interpolation control of Radius designation method is executed on the basis of the items set on operating data. When it is executed, only「Goal position」can affect circular interpolation. In other words, whatever value is set as, it does not affect the action and no errors arise.
(2) When setting the circular interpolating auxiliary point (radius) of main-axis, it must be bigger than the half of the length between starting position and goal position. If it is smaller than the half(R) and the value is higher than 80% of R, circular interpolation which has middle point between starting position and goal position as center-point is executed. If it is smaller than the half(R) and the value is lower than 80% of R, error (error code:270) arises and circular interpolation is not executed.

[Example] Axis1 is main-axis and Axis2 is sub-axis. Execute circular interpolation with relative coordinates and designated radius.

■ Starting position (1000, 1000), Goal position (8000, 0), Auxiliary point (5000, 0)

Moving direction of arc : CCW, Size of arc : Arc >= 180°

The action is as follows in the condition above

■ Setting example in XG-PM

▪ Main-axis(Axis1) Operating data

Step No.	Control method	Operation Method	Goal position [pls]	Operating speed [pls/s]	Acc. No,	Dec. No,	M Code	Dwell Time	Sub-axis Setting	Auxiliary Point	Circular interpolation mode	The no. of turns	Helical interpolation
1	Relative, Circular interpolation	Singular, End	8000	1000	No.1	No.1	0	100	Axis2	5000	Radius, CCW, Arc>=180	0	Not use

▪ Sub-axis(Axis2) Operating data

Step No.	Control method	Operation Method	Goal position [pls]	Operating speed [pls/s]	Acc. No,	Dec. No,	M Code	Dwell Time	Sub-axis Setting	Auxiliary Point	Circular interpolation mode	The no. of turns	Helical interpolation
1	Absolute, shortcut position control	Singular, End	1000	0	No.1	No.1	0	100	Axis2	0	Middle point	0	Not use

■ Operation pattern

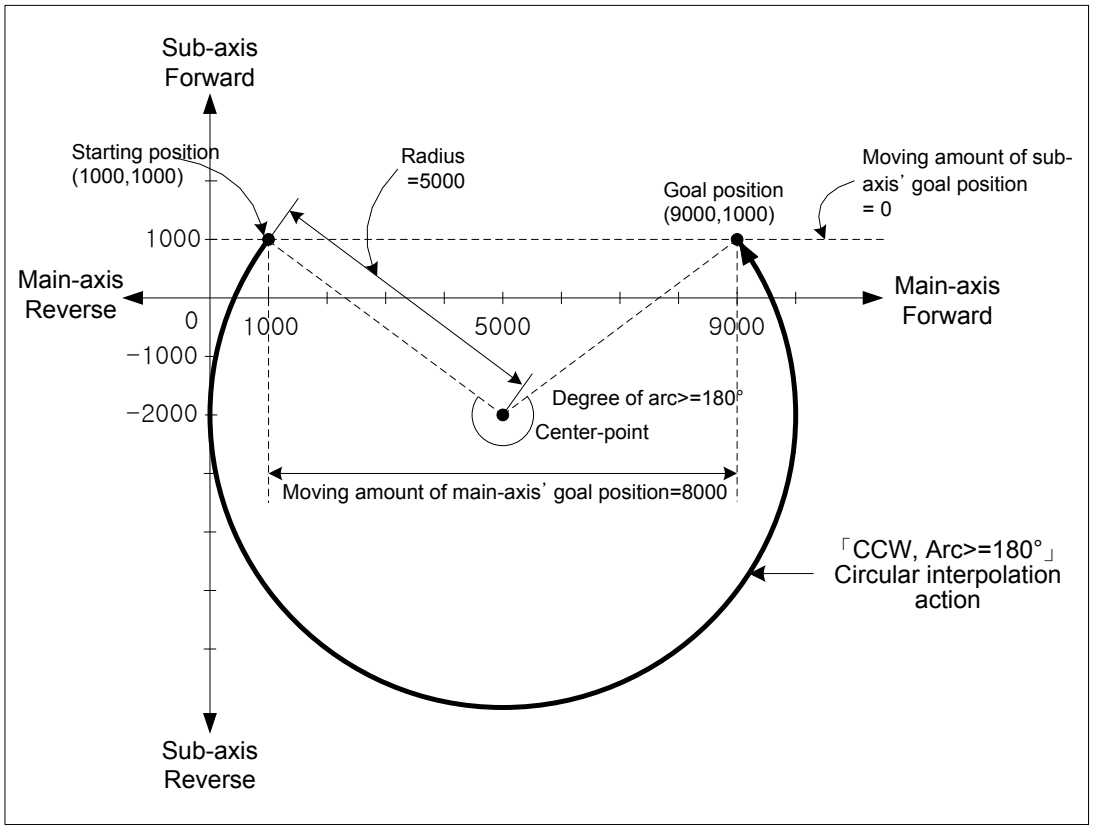

9.2.12 Helical Interpolation Control

After executed by positioning operation start command (Indirect, Synchronous), 2 axes move along the circular arc, an axis execute linear interpolation synchronizing with circular interpolation.

It may execute helical interpolation of bigger scale than 360°

Combinations of axis to use are not limited and 3 axes are used among axis1~axis4.

(1) Characteristics of control

(a) After setting operating data to circular interpolation, then set a helical interpolation axis on the item “Helical interpolation”, the helical interpolation will be executed.

(b) The direction of circular arc depends on the goal position and the mode of circular interpolation, the direction of helical axis depends on the coordinates setting and the goal position.

■ The case of「Absolute, Circular interpolation」

Starting position < Goal position : Positioning operation in forward direction

Starting position > Goal position : Positioning operation in reverse direction

■ The case of「Relative, Circular interpolation」

Positive sign (+) or No sign : Positioning operation in forward direction

Negative sign (-) : Positioning operation in reverse direction

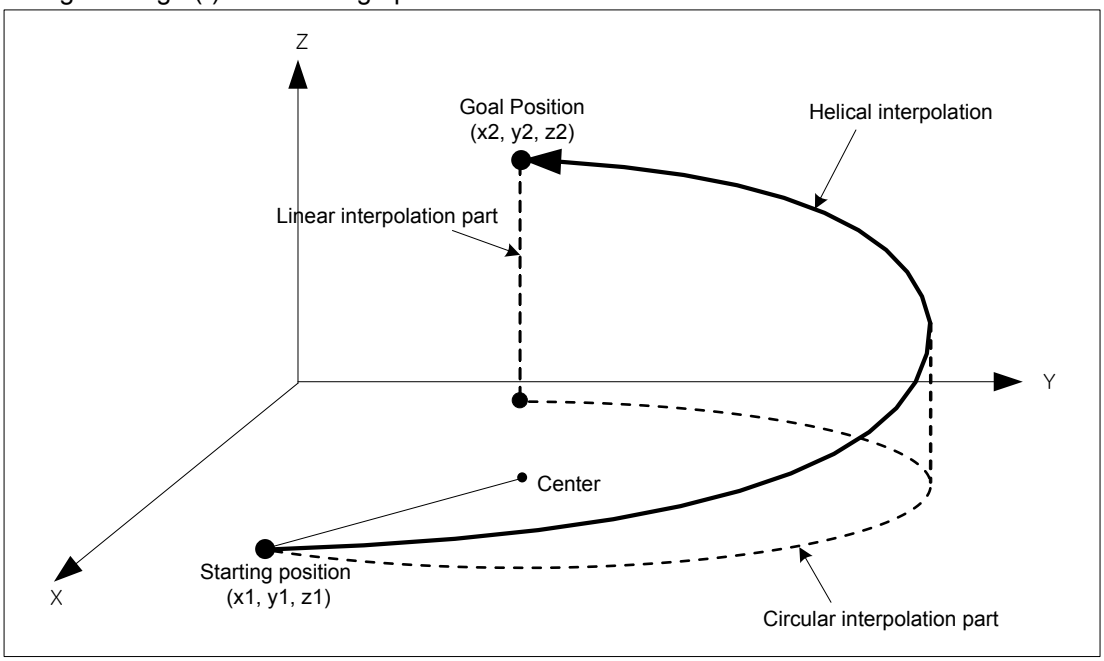

(2) Restrictions

(a) The restrictions of helical interpolation are same as various kinds of circular interpolation depending on the mode of circular interpolation.

(b) If user sets「Helical Interpolation」to “Not use”, it will be same as the action of circular interpolation.

(c) If user sets the goal position of helical interpolation axis to the same starting position, it will be same as the action of circular interpolation.

Note

If executing helical interpolation, 3 axes will operate at the same time. Need user to pay attention.
(1) Auxiliary operations may be used are as follows.
▪ Speed override, Dec. stop, Emergent stop, Skip operation.
(2) The commands may not be used in circular interpolating operation are as follows.
▪ Position/Speed switching control, Position override, Continuous operation
(3) The parameter items operating by standards of each axis are as follows.
▪ Amount of backlash revision in extended parameter items, Software high limit, Software low limit

(3) Example of operation data setting

Items	Main axis(axis1) Setting	Sub axis(axis2) Setting	Helical axis(axis3) setting	Description
Control method	Absolute, Circular interpolation	- *1	- *1	Circular interpolation must be set when executing helical interpolation
Operation method	Singular, End	-	-	Set operation method for helical interpolation
Goal position[pls]	10000	0	10000	Set the goal position on main, sub, helical axis for executing positioning.
Operation speed[pls/s]	1000	-	-	Helical interpolation designates composition speed of circular interpolation part
Acc. no.	No.1	-	-	Set acc. time no. used in acceleration (no.1 ~ no.4)
Dec. no	No.2	-	-	Set dec. time no. used in deceleration (no.1 ~ no.4)
M code	0	-	-	Set it when user needs to synchronize another auxiliary operation with helical interpolation.
Dwell time	500	-	-	Set dwell time(ms) for outputting positioning complete signal
Sub axis setting	Axis2	-	-	Set an axis to be used as sub axis from settable axis on main axis operation data
Auxiliary point of Circular interpolation	5000	5000	-	Set auxiliary data of circular interpolation action
Circular interpolation mode	Middle point	-	-	Set circular interpolation mode to be used in circular action of helical interpolation
No. of turn of circular interpolation	0	-	-	Set the no. of turn of circular arc when user need to execute helical interpolation of bigger degree than 360°
Helical interpolation	Axis3	-	-	Set an axis to be used as helical interpolation axis from settable axis on main axis operation data

- *1 : This item does not need to be set. Whatever it is set as, it dose not affect circular interpolation.

Note

Helical interpolation control is executed on the item basis set on operation data of main axis.
When executing circular interpolation of helical interpolation, only “Goal position”, “Auxiliary point of circular interpolation” items of sub axis setting and “Goal position” item of helical axis setting affect helical interpolation. In other words, Whatever the setting value is, it does not affect operation and cause any errors.

[Example] Execute helical interpolation of absolute coordinates, center point designating method and axis1, axis2, axis3 are main, sub, helical axis.

■ The action in the case (Starting point (650, 400, 0), Goal position (400, 1200, 350), Auxiliary point (800, 400)) is as follows.

■ Setting example of XG-PM

▪ Operation data of main axis(axis1)

Step no.	Control method	Operating method	Goal position [pls]	Operating speed [pls/s]	Acc. no.	Dec. no.	M code	Dwell time	Sub axis setting	Auxiliary point of circular interpolation	Circular interpolation mode	No. of turn of circular interpolation	Helical interpolation
1	Absolute, circular interpolation	Singular, End	400	1000	No.1	No.1	0	100	Axis2	800	Middle point,CCW	0	Axis3

▪ Operation data of sub axis(axis2)

Step no.	Control method	Operating method	Goal position [pls]	Operating speed [pls/s]	Acc. no.	Dec. no.	M code	Dwell time	Sub axis setting	Auxiliary point of circular interpolation	Circular interpolation mode	No. of turn of circular interpolation	Helical interpolation
1	Absolute, shortcut position control	Singular, End	1200	0	No.1	No.1	0	100	-	400	Middle point	0	Not use

▪ Operation data of sub axis(axis2)

Step no.	Control method	Operating method	Goal position [pls]	Operating speed [pls/s]	Acc. no.	Dec. no.	M code	Dwell time	Sub axis setting	Auxiliary point of circular interpolation	Circular interpolation mode	No. of turn of circular interpolation	Helical interpolation
1	Absolute, shortcut position control	Singular, End	350	0	No.1	No.1	0	100	-	0	Middle point	0	Not use

■ Operating pattern

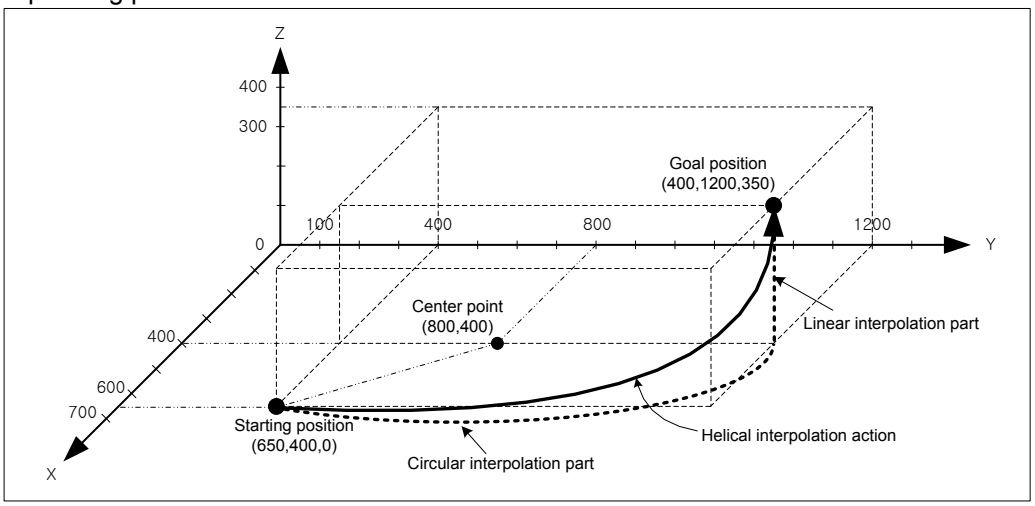

9.2.13 Ellipse Interpolation Control

Execute ellipse interpolation at ellipse rate and the moving angle of circular interpolation operating data and ellipse interpolation command.

Combinations of axis to be used in ellipse interpolation control are unlimited and 2 axes from axis1~4 are used.

(1) Characteristics of Control

(a) Ellipse interpolation is set with circular interpolation of center-designated method and the rate and size of ellipse is set with auxiliary data of “ellipse interpolation command”

Auxiliary data	Setting value	Description
Ratio of ellipse (%)	0 ~ 65535	Set the ratio of horizontal axis and vertical axis with the ratio to the circle (1 = 0.01%)
Size(Degree) of ellipse	0 ~ 65535	Set the degree of ellipse’s movement (1 = 0.1°)

(b) Moving direction of ellipse is decided by the direction set on “circular interpolation mode” of operation data.

- 「Center point, CW」- Execute ellipse interpolation in clockwise.
- 「Center point, CCW」- Execute ellipse interpolation in counterclockwise.

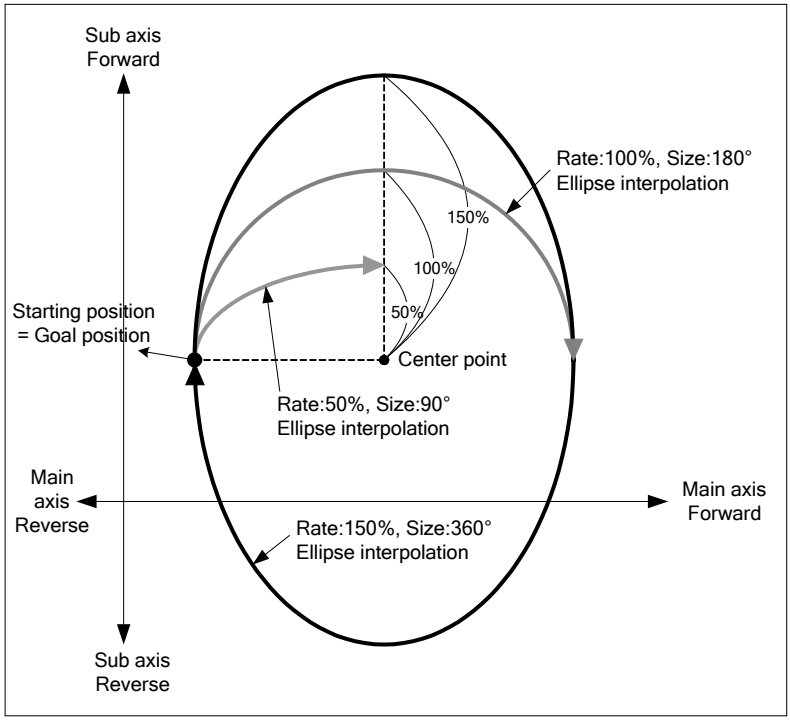

(c) Starting position and goal position must be same when executing ellipse interpolation.

(d) When executing ellipse interpolation, the radius changes continuously and composing speed also changes depending on the ratio of ellipse. When the ratio of ellipse is bigger than 100%, operating speed of sub axis and composing speed get faster. So it calls user's attention. Sub axis of ellipse interpolation is not limited by "speed limit", so user must set operating speed below limit.

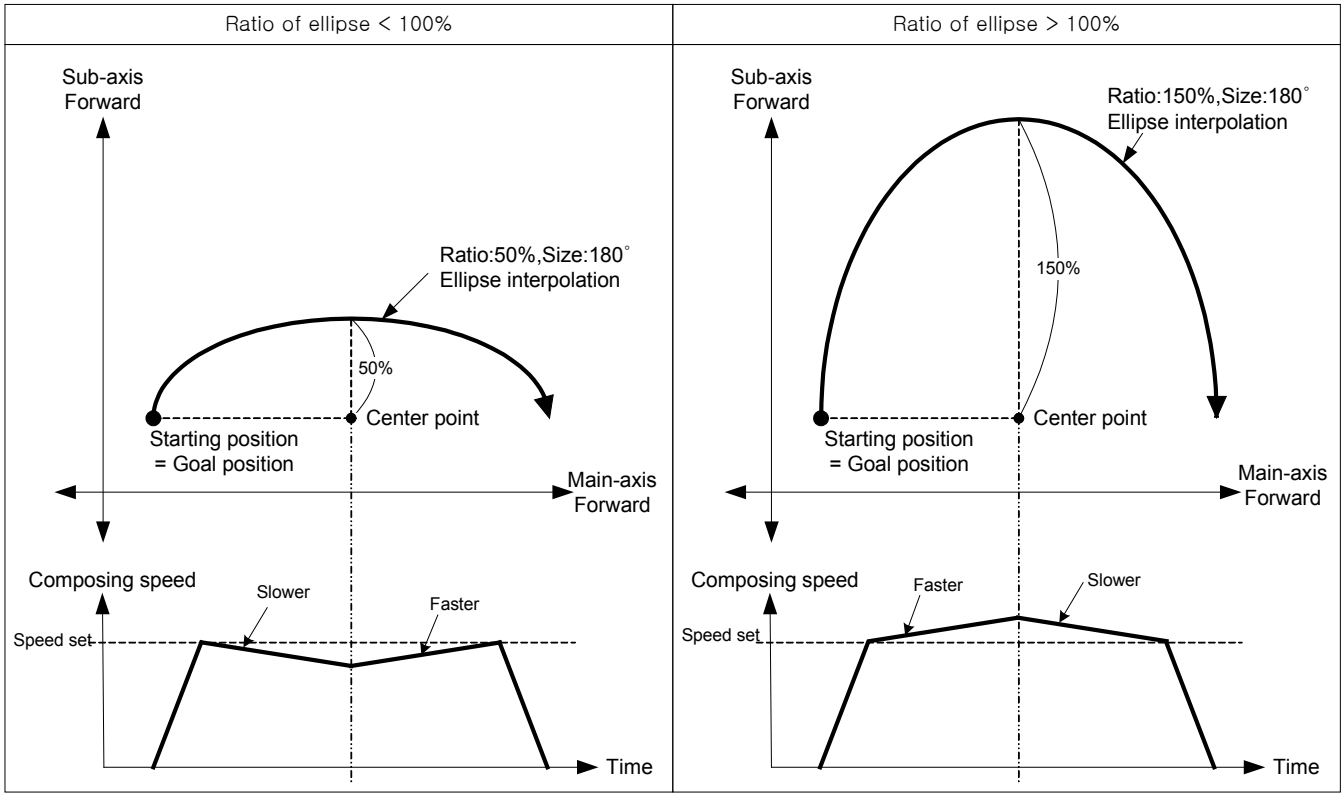

(2) Restrictions

(a) Ellipse interpolation may not be executed in the case below.

- 「Sub-axis setting」 Error (error code : 547)
  - The value of sub-axis setting of main axis operating data is "Axis-undecided".
  - The value of sub-axis setting of main axis operating data is set equally to the no. of main-axis.
  - The value of sub-axis setting of main axis operating data is set wrongly. (Exceeding settable axis no.)
  - An axis of helical interpolation is set.
- Control unit of main or sub axis is set as "degree". (error code : 551(main), 552(sub))
- The center point designated as auxiliary point is the same as starting position or goal position. (error code : 553)
- The radius of circular arc that calculated exceeds 2147483647pls. (error code : 554)
- The operating method is "continuous" or "go on". (error code : 556)
  If user executes ellipse interpolation, End operation must be set before use.
- Staring position and Goal position are different. (error code : 558)
- Size of circular arc (Moving degree) is 0. (error code : 559)

Note

Need user to heed the synchronous operation of 2 axes in ellipse interpolation start.
1. Auxiliary operations available are as follows.
   ▪ Speed override, Dec. stop, Emergent stop, Skip operation
2. The commands unavailable in ellipse interpolating operation are as follows.
   ▪ Position/Speed switching control, Position override, Continuous operation
3. Parameter items of each axis on setting value basis are as follows.
   ▪ Backlash revision of extended parameter, Software high limit, Software low limit

(3) Setting example of operation data

Items	Main-axis setting	Sub-axis setting	Description
Control Method	Absolute, Circular interpolation	- *1	Set circular interpolation when executing ellipse interpolation
Operating Method	Singular, End	-	“End” must be set in ellipse interpolation
Goal position[pls]	10000	0	Set the goal position to execute on Main, Sub, Helical axis
Operating speed[pls/s]	1000	-	Designate composing speed for circular interpolation part in ellipse interpolation
Acc. no.	No.1	-	Set no. of acc. time to use in acceleration (no1~4)
Dec. no.	No.2	-	Set no. of dec. time to use in deceleration (no1~4)
M code	0	-	Set it when executing another auxiliary operation synchronizing with ellipse interpolation
Dwell time	500	-	Set dwell time for outputting positioning complete
Sub-axis setting	Axis2	-	Set an axis to use as sub-axis among the axis available on main-axis operating data.
Auxiliary point	5000	5000	Set the center point of ellipse
Circular interpolation	Center point, CW	-	Must be set center point when using ellipse interpolation
The No. of Turns	-	-	The no. of turn is not operated in ellipse interpolation
Helical	Not use	-	Set axis of helical interpolation as “Not Use” in ellipse interpolation

- *1 : It means that no need to be set. Whatever value it is, it dose not affect circular interpolation.

Note

Ellipse interpolation control is executed by the standard set on operating data of main-axis.
When executing ellipse interpolation, only「Goal position」and「Auxiliary point of circular interpolation」affect the operation of ellipse interpolation. In other words, whatever value is set to, it does not affect operation and no errors arise.

[Example] Execute ellipse interpolation with 20% of ellipse ratio, 360°of movement degree and relative coordinates

■ Starting position (100, 100),

Setting of goal position : (0, 0)

Setting of auxiliary point : (500, 200)

Direction of operation : CW

■ Example setting in XG-PM

▪ Operation data of Main-axis(axis1)

Step no.	Control method	Operating method	Goal position [pls]	Operating speed [pls/s]	Acc. No.	Dec. No.	M code	Dwell Time	Setting Sub axis	Auxiliary point of circular interpolation	Circular interpolation mode	The no. of turns	Helical interpolation
1	Relative, circular interpolation	Singular, End	0	1000	No.1	No.1	0	100	Axis2	800	Center,CW	0	Not use

▪ Operation data of Sub-axis(axis2)

Step no.	Control method	Operating method	Goal position [pls]	Operating speed [pls/s]	Acc. No.	Dec. No.	M code	Dwell Time	Setting Sub axis	Auxiliary point of circular interpolation	Circular interpolation mode	The no. of turns	Helical interpolation
1	Absolute, Shortcu position control	Singular, End	0	0	No.1	No.1	0	0	Undecided	400	Middle point	0	Not use

■ Operating data

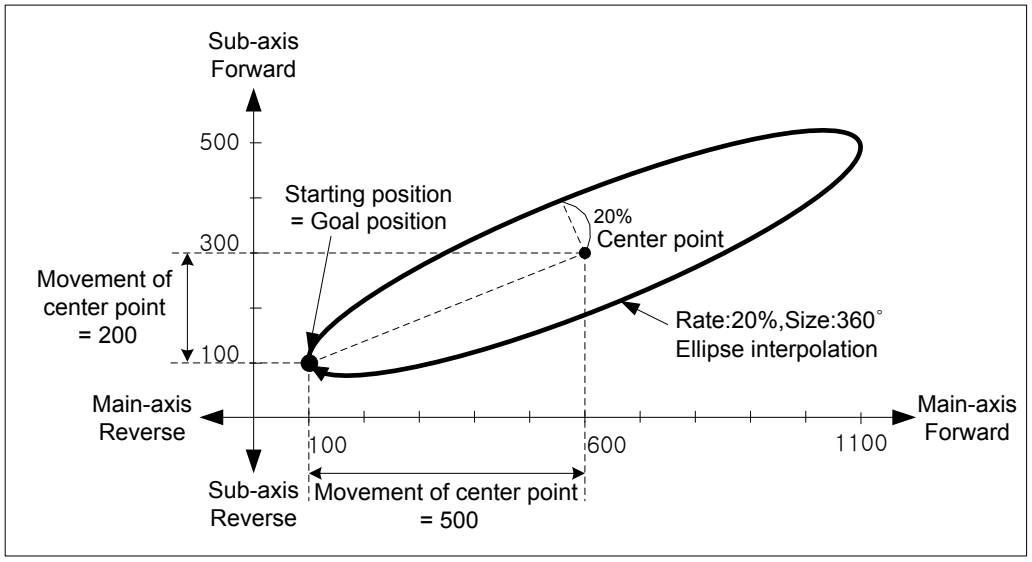

Note

(1) If the degree of ellipse is not 360°, the goal position and actual position after stop operating are not same.
(2) If the ratio of ellipse is 0%, the trace of ellipse interpolation is shown as straight line. Ratio of ellipse need to be set to above 0.

9.2.14 Speed/Position Switching Control

The setting axis by positioning start carries out the speed control and is switched from speed control to position control when speed/position switching signal is entered to the positioning module inside or outside, and then carries out the positioning as much as goal transfer amount.

(1) Characteristics of Control

(a) Set control method of operating data as “Shortcut speed control” and executing positioning with 「Speed/Position Switching」 in speed control operation.

(b) Direction of movement depends on the sign of value.

- ■ Forward : The position value is Positive(+)
- ■ Reverse : The position value is Negative(-)

(c) For using 「External speed/position switching control」, “External speed/position switching control” must be set as ‘1 : Allowed’

Item	Setting value	Description
External speed/position switching control	0 : Not allowed	External speed/position switching control signal is ignored and it does not affect operation
	1 : Allowed	External speed/position switching control signal is operated

(d) In speed/position switching control, the value of coordinates has no affection. In other words, actions of “Absolute, Shortcut speed control” and “Relative, Shortcut speed control” are same.

(2) Operation timing

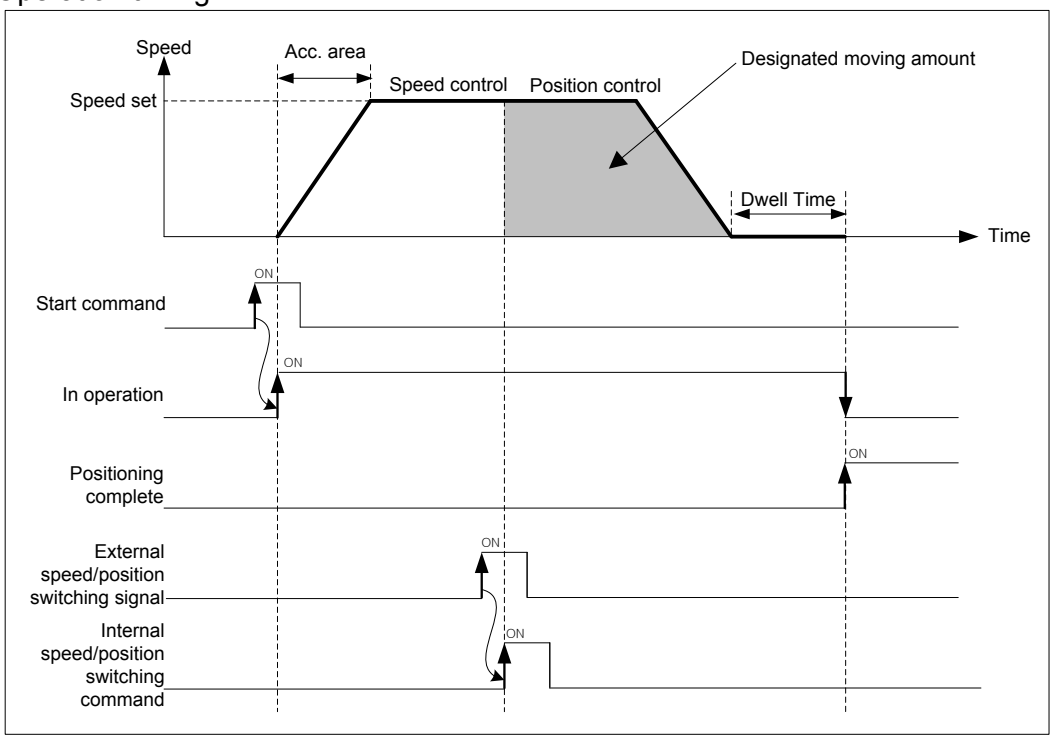

(3) Restrictions

(a) Operation pattern of speed control has to be set as “End” or “Go on”. If “Continuous” is set as, error (error code:236) arises and speed control may not be executed.

(b) If the value of goal position is 0, speed/position switching command may not be executed. In this case, it continues to operate with speed control.

(4) Setting example of operation data

Items	Setting value	Description
Control method	Absolute, Shortcut speed control	When executing speed/position switching control, set shortcut speed control
Operating method	Singular, End	When executing speed/position switching control, set “end” or “continuous”
Goal position [pls]	10000	After inputting speed/position switching control, set moving amount to position.
Operating speed [pls/s]	1000	Set the operating speed of speed/position switching control
Acc. no.	No1	Set acc. no. used in acceleration (no.1~4)
Dec. no.	No.2	Set dec. no. used in deceleration (no.1~4)
M code	0	Set it when user needs to execute another auxiliary work synchronizing with speed/position switching control
Dwell time	500	Set dwell time(ms) between switching command’s inputting and positioning completion’s outputting

9.2.15 Position specified Speed/Position Switching Control

The setting axis by positioning start carries out the speed control and is switched from speed control to position control when speed/position switching signal is entered to the positioning module, and then carries out the positioning by transfer amount.

(1) Characteristics of Control

(a) Set control method of operating data as “Single axis speed control” and execute 「Speed/Position Switching」 in speed control operation.

(b) Direction of movement depends on the sign of value.

- ■ Forward : The position value is Positive(+)
- ■ Reverse : The position value is Negative(-)

(c) In speed/position switching control, the value of coordinates has no affection. In other words, actions of “Absolute, single axis speed control” and “Relative, single axis speed control” are same.

(d) In Position specified speed/position control, a target position set in the operation data or direct start is ignored and it moves according to target position operand of 「Position specified speed/position switching control」 command

(2) Operation timing

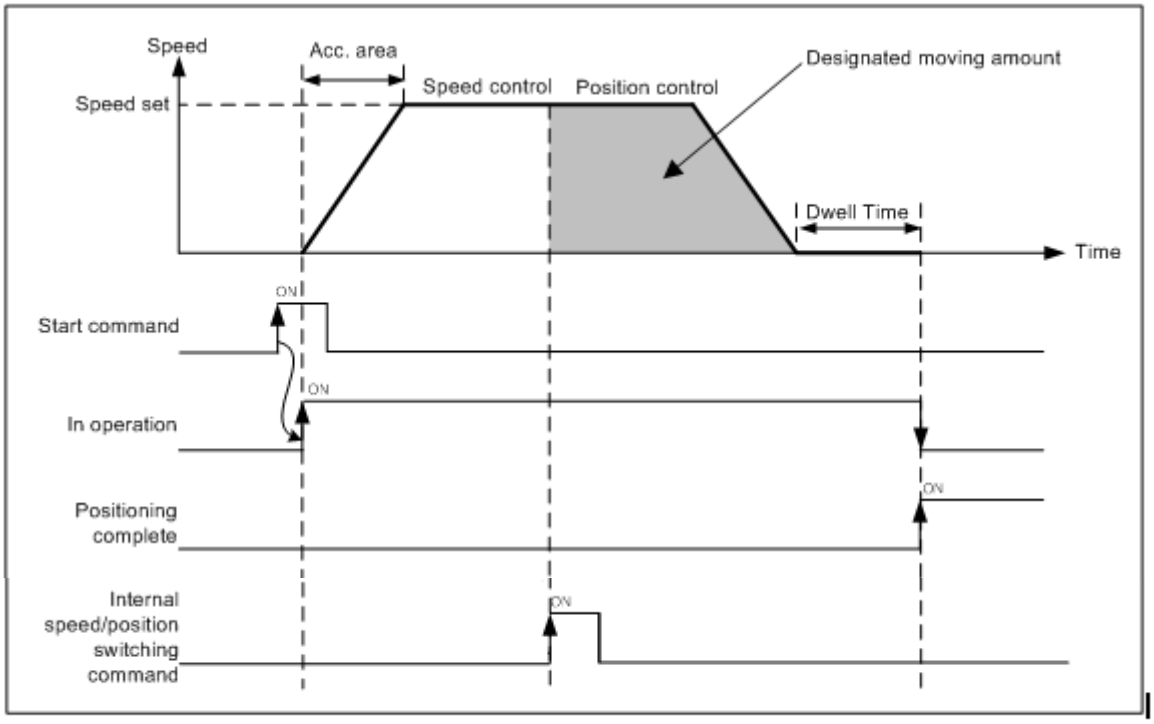

(3) Restrictions

(a) Operation pattern of speed control has to be set as “End” or “Go on”. If “Continuous” is set as, error (error code:236) arises and speed control may not be executed.

(b) If the value of goal position is 0, position specified speed/position switching command may not be executed. In this case, it continues to operate with speed control.

(4) Setting example of operation data

Items	Setting value	Description
Control method	Absolute, Shortcut speed control	When executing speed/position switching control, set shortcut speed control
Operating method	Singular, End	When executing speed/position switching control, set “end” or “continuous”
Goal position [pls]	10000	After inputting speed/position switching control, set moving amount to position.
Operating speed [pls/s]	1000	Set the operating speed of speed/position switching control
Acc. no.	No1	Set acc. no. used in acceleration (no.1~4)
Dec. no.	No.2	Set dec. no. used in deceleration (no.1~4)
M code	0	Set it when user needs to execute another auxiliary work synchronizing with speed/position switching control
Dwell time	500	Set dwell time(ms) between switching command’s inputting and positioning completion’s outputting

9.2.16 Position/Speed Switching Control

The setting axis by positioning start carries out the position control and is switched from position control to speed control when position/speed switching signal is entered to the positioning module inside, and then it stops by deceleration stop or SKIP operation or continues next operation.

(1) Characteristics of Control

(a) Set control method of operating data as “Shortcut position control” and user may change position control to speed control with「Speed/Position Switching」

(b) Direction of movement depends on the sign of value and coordinates

■ 「Absolute, Shortcut position control」

- Starting position < Goal position : Positioning in forward direction
- Starting position > Goal position : Positioning in reverse direction

■ 「Relative, Shortcut position control」

- The value of goal position has positive sign (+) : Positioning in forward direction
- The value of goal position has negative sign (-) : Positioning in reverse direction

(2) Operating timing

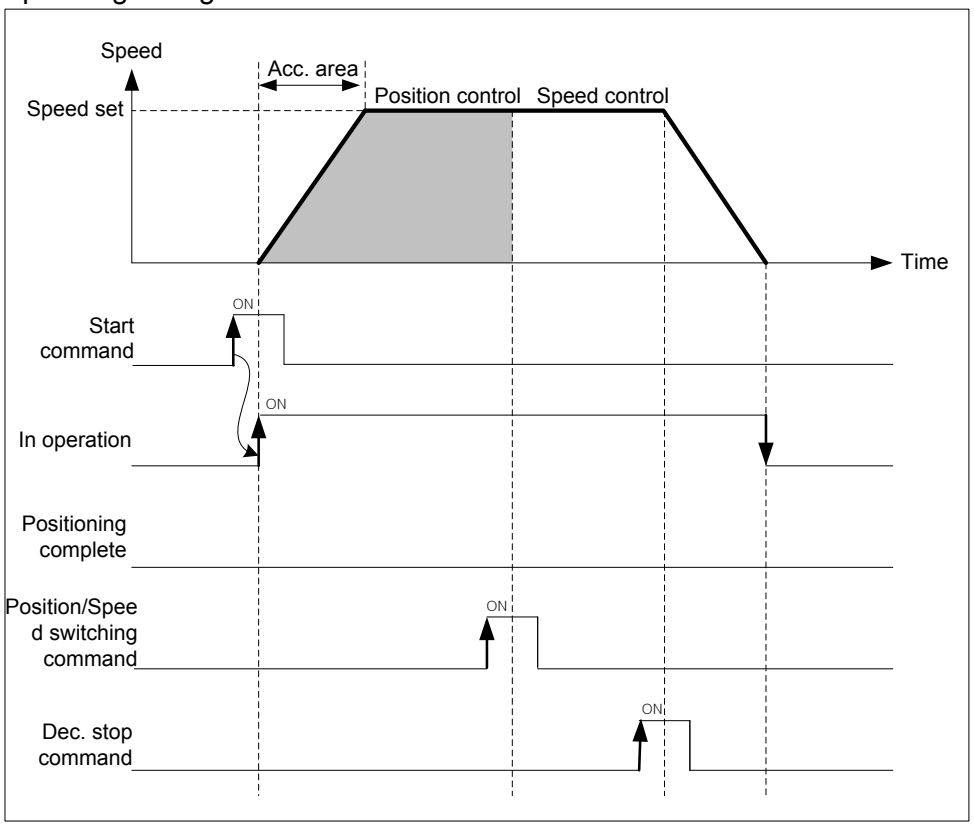

(3) Restrictions

(a) Position/speed switching command is not inputted before positioning to the goal position, it stops by deceleration and finishes the positioning.

(b) After position/speed switching, software high/low limit check depends on “Soft high/low limit in speed control” of extended parameter.

Items	Setting value	Description
Soft high/low in speed control	0 : Not detect	Not to execute checking for software high/low limit in speed control
	1 : Detect	Execute checking for software high/low limit in speed control

(4) Setting example of operation data

Items	Setting value	Description
Control method	Absolute, Shortcut speed control	When executing position/speed switching control, set shortcut speed control
Operating method	Singular, End	Set operating method for position control
Goal position [pls]	10000	Set the value of goal position for position control
Operating speed [pls/s]	1000	Set the operating speed of position/speed switching control
Acc. no.	No.1	Set acc. no. used in acceleration (no.1~4)
Dec. no.	No.2	Set dec. no. used in deceleration (no.1~4)
M code	0	Set it when user needs to execute another auxiliary work synchronizing with speed/position switching control
Dwell time	500	When it is executed with position control and without position/speed switching command, set dwell time between positioning and complete signal’s outputting.

9.2.17 Start of Positioning

In case of stop in action of dynamic positioning, can positioning by restart. Three Starting types are general start, Simultaneous start, point operation. Operating signal is have to “OFF”, when it start.

(1) Direct start

(a) Do not use operating data, directly input positioning data by auxiliary data and perform positioning control.
(b) Setting auxiliary data of direct start.

Setting item	Contents
Target position	Set target position of control.
Operating speed	Set operating speed of control.
Dwell time	Set dwell time (ms) that it is from positioning to outputting signal of positioning. (0~65535)
M code	Set for performing auxiliary action which is depending on set control.(0~65535)
Acceleration time No.	Set acceleration time number for acceleration. (No.1 ~ No.4)
Reduction time No.	Set reduction time number for reduction. (No.1 ~ No.4)
Coordinate	Set coordinate about target position of set control.(absolute, relative)
Control method	When command of converting position/speed is not inputted and only operated by positioning control, set dwell time (ms) that it is from positioning to outputting signal of positioning. (0:Positioning, 1:Speed control, 2:Feed control)

Note

Direct start only can use when it is shortened operation. In case that Interpolation operation, use indirect starts.

(2) Indirect Start

(a) Start control of positioning by designating step number of operation data which was saved in positioning module.
(b) Setting auxiliary data of indirect start

Setting item	Contents
Operation step	Set step number of operation data what you need operating.(0 or 1 ~ 400)

Note

Set ‘O’ operation step of Indirect start and carry out command of indirect start. And then start operation data which was saved in step number.

(3) Simultaneous start

(a) According to axis information and setting step, Simultaneous start positioning operation data of axis 2 ~ axis 4.

(b) When Input stop command, only it decelerates and stops on the corresponding axis. In case of Simultaneous start setting step number is current operating step number. Input start command, and then according to relative coordinate and absolute coordinate, operate positioning.

(c) Condition

In these cases can not operate all of the axes which were set simultaneous start by error.

- When occurred error in over an axis among setting axes of simultaneous start. (Output error code in its axis.)
- When command axis of simultaneous start was wrong. (Error code : 296)
  - Only set command axis (Set over 2 axes is necessary.)
  - In case of exceeding number of possible setting axis of current using module among the possible setting axes

[Example] Set Simultaneous start of axis 1, axis 2, axis 3 is as follows;

■ Current position of axis 1: 0, Operation step: 1
Current position of axis 2: 0, Operation step: 3
Current position of axis 3: 0, Operation step: 10

■ Example of setting XG-PM

- Operation data of axis 1

Step No.	Control method	Operation method	Target position [pls]	Operation speed [pls/s]	Acceleratio n No.	Deceleratio n No.	M code	Dwell time
1	Absolute, Shorten position control	Single, Continuous	1000	1000	1	1	0	0
2	Absolute, Shorten position control	Single, End	1800	800	1	1	0	100

- Operation data of axis 2

Step No.	Control method	Operation method	Target position [pls]	Operation speed [pls/s]	Acceleratio n No.	Deceleratio n No.	M code	Dwell time
3	Absolute, Shorten position control	Single, End	900	500	2	2	0	0

- Operation data of axis 3

Step No.	Control method	Operation method	Target position [pls]	Operation speed [pls/s]	Acceleratio n No.	Deceleratio n No.	M code	Dwell time
10	Absolute, Shorten speed control	Single, End	1000	300	3	3	0	100

■ Operation pattern

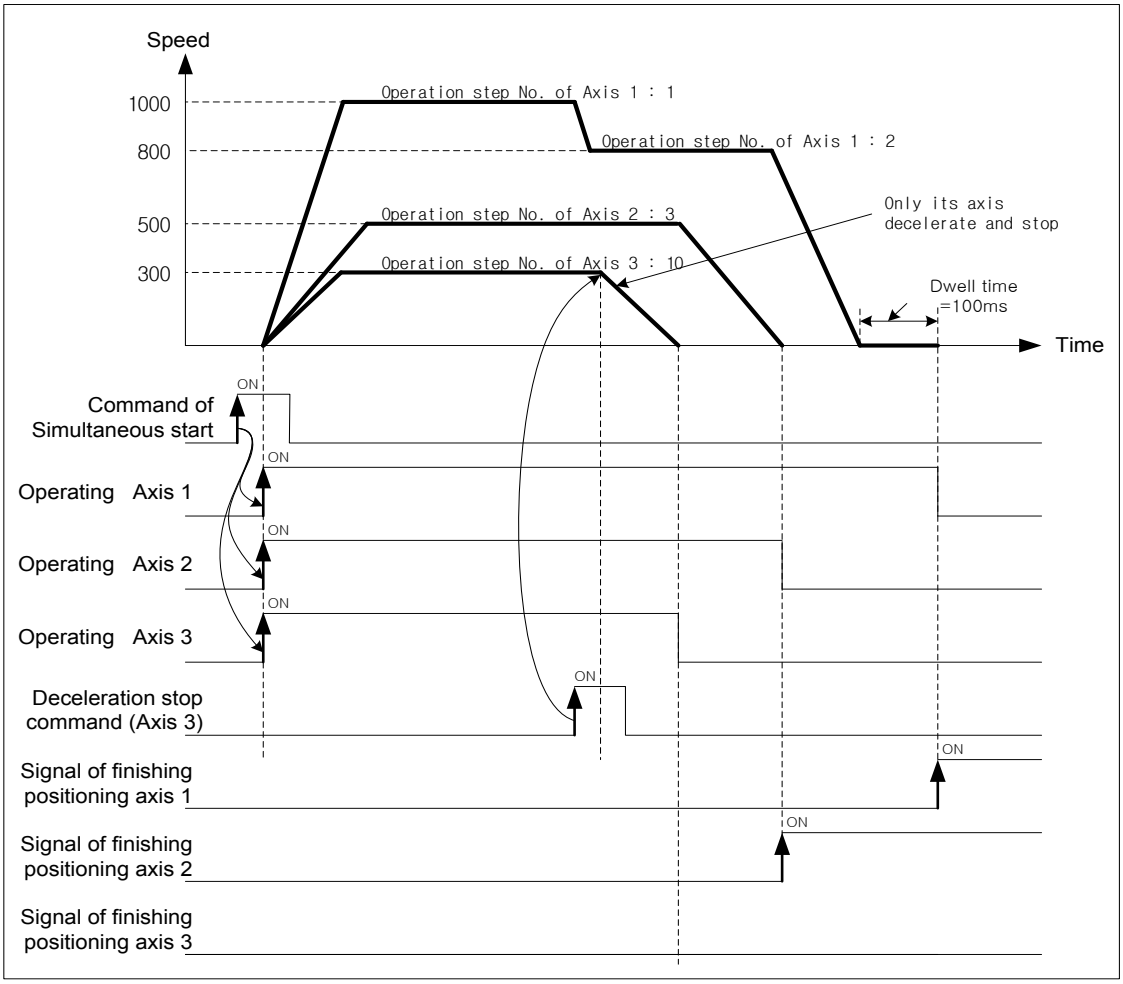

(4) Point operation

(a) Point maneuvering is a positioning drive also called ptp drive. Which processes the sequential data of user defined steps in order

(b) It can be appointed 20 steps by point operation.

(c) Start point maneuvers as much as the number of set points from setting step (point1), irrespective of end, continue, automatic operation mode.

[Example] Point operation of axis 1 is as follows;

■ The number of point operation: 4
Point operation step No. : 1, 2, 10, 20
Current position of Axis 1 : 0

■ Example of setting XG-PM

Step No.	Control method	Operation method	Target position [pls]	Operation speed [pls/s]	Acceleration No.	Deceleration No.	M code	Dwell time
1	Absolute, Shorten position control	Singleness, End	1000	1000	1	1	0	20
2	Absolute, Shorten position control	Singleness, End	3000	2000	1	1	0	20
10	Absolute, Shorten position control	Singleness, Go-on	6000	3000	1	1	0	20
11	Absolute, Shorten position control	Singleness, Go-on	10000	4000	1	1	0	20
12	Absolute, Shorten position control	Singleness, Go-on	15000	5000	1	1	0	20
13	Absolute, Shorten position control	Singleness, End	25000	6000	1	1	0	20
20	Absolute, Shorten position control	Singleness, Continue	45000	7000	1	1	0	0
21	Absolute, Shorten position control	Singleness, continue	75000	8000	1	1	0	0
22	Absolute, Shorten position control	Singleness, End	0	9000	1	1	0	0

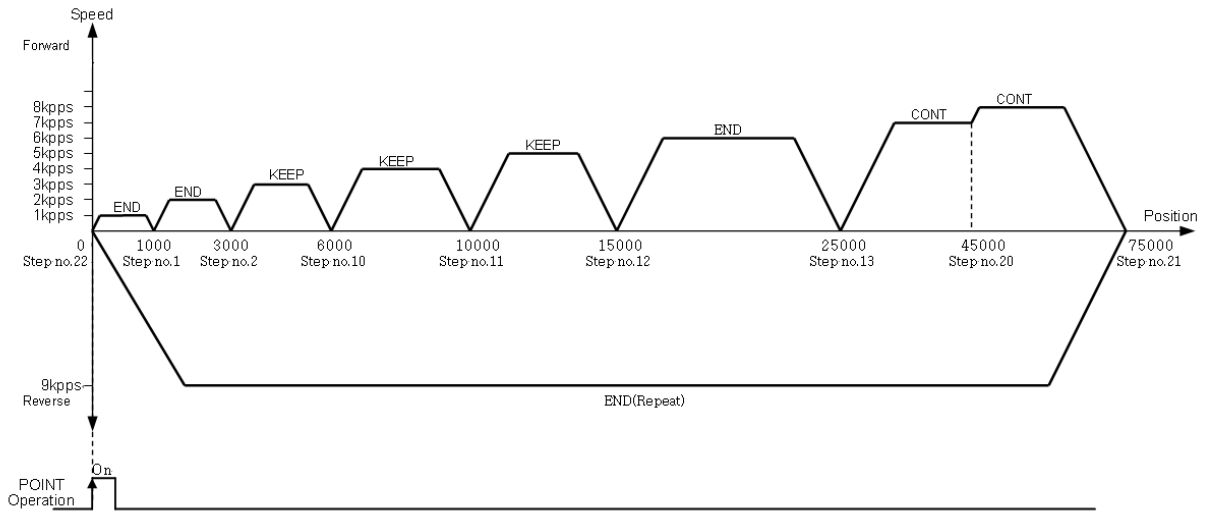

9.2.18 Positioning stop

Here describes factor which are stop axis during operation.

(1) Stop command and Stop factor

Command & Stop factor of stop positioning operating is as follows;

(a) It will stop, when stop command is “On” or there are some stop factors at each axis. But, interpolation control (linear interpolation, Circular interpolation, helical interpolation, elliptic interpolation)
In case of there is stop command or stop factor on main axis, operation axes of interpolation control will stop.

Status Stop factor		Positioning *1	Homing*2	Jog Operation	Speed synchronous Cam control	Status of Axis after stop	M code On Status of signal
Parameter setting *3	Exceed soft high-limit	Prompt stop	No Detection	Prompt stop *5		Error (Error501)	No change
	Exceed soft low-limit	Prompt stop	No Detection	Prompt stop		Error (Error502)	No change
Sequence program *4	Deceleration stop command	Deceleration stop	Deceleration stop	Error 322 (Go-on operation)	Deceleration stop	Stop On	No change
	Emergency stop command	Sudden stop				Error (Error481)	“Off”
External signal	External high-limit “On”	Sudden stop		When operate to forward, sudden stop	Sudden stop	Error (Error492)	No change
	External low-limit “On”	Sudden stop		When operate to reverse, sudden stop	Sudden stop	Error (Error493)	No change
	External emergency stop “On” *8	Sudden stop				Error (Error491) prohibition output	“Off”
	External stop “On” *9	Deceleration stop	Deceleration stop	Error322 (Go-on operation)	Deceleration stop	Stop “On”	No change
XG-PM Software	Deceleration stop command	Deceleration stop	Deceleration stop	Error322 (Go-on operation)	Deceleration stop	Stop “On”	No change
	Emergency stop command	Sudden stop				Stop “On”	“Off”

Note

*1 : Positioning means position control, speed control, interpolation control, speed/position switching control, position/speed switching control, position/torque control by positioning data.
*2 : When complete homing, approximate origin and origin signal do not effect to positioning control.
*3 : Only work while software high/low limit on the speed control of expansion parameter at the speed control operation mode is set “1:detection”
*4 : Sequence program means XGT program type.
*5 : Output speed become “0”, when it has factor of stop.
*6 : Speed goes to "0" while the deceleration stop time of deceleration stop command support data decelerates as a set time.
*7 : Speed goes to “0” decelerate by set time as「sudden stop, deceleration」of parameter.
*8 : When the「select external emergency stop/ deceleration」of expansion parameter is “0: emergency stop”, it is available.
*9 : When「select external emergency stop/deceleration stop」of expansion parameter is “1:deceleration stop”, it is available.

(2) Deceleration Stop

(a) If meet emergency stop while operate indirect start, direct start, simultaneous start, start operation, homing operation, inching operation, it will sudden stop.

(b) Deceleration stop command not different at these sections: acceleration section, constant section, deceleration section.

(c) If it is decelerated and stopped by deceleration stop command, will not be completed positioning operation as set target position. And….

- No signal for completely positioning
- M code signal cannot be “On” during “After” mode of “M code” mode.

(d) If it receives order for indirect start command (step No. = current step No.) while it is stop,

- Positioning of absolute coordinate method: Operate amount of the position reminder which it isn’t outputted on the current operation step.
- Positioning of relative coordinate method: Operate as set movement at the target position.

(e) There are two type of deceleration stop: Internal/external deceleration stop.

- Internal deceleration stop command
  It decelerate and stop by XG-PM and「deceleration stop」command of sequence program as set support data.
- External deceleration stop signal
  In case of input signal of external emergency stop/deceleration stop to be “On”, it will be decelerated and stopped by set deceleration time in current positioning operation.
  Have to set item of “select external emergency stop/deceleration stop” of expansion parameter for using input signal of external emergency stop/deceleration stop as external deceleration stop command.

Item	Setting value	Contents
Select external emergency stop/ deceleration stop	0: Emergency stop	Use as “emergency stop” signal when input external signal.
	1: Deceleration stop	Use as “deceleration stop” signal when input external signal.

(f) Condition

- When command internal deceleration stop
  The value of deceleration time can bigger than set value of deceleration time by auxiliary data.
- If deceleration stop command is inputted while operate Jog, error (error code: 322) will be made. Use “Stop Jog” command for Jog operation stop.

(g) Movement Timing

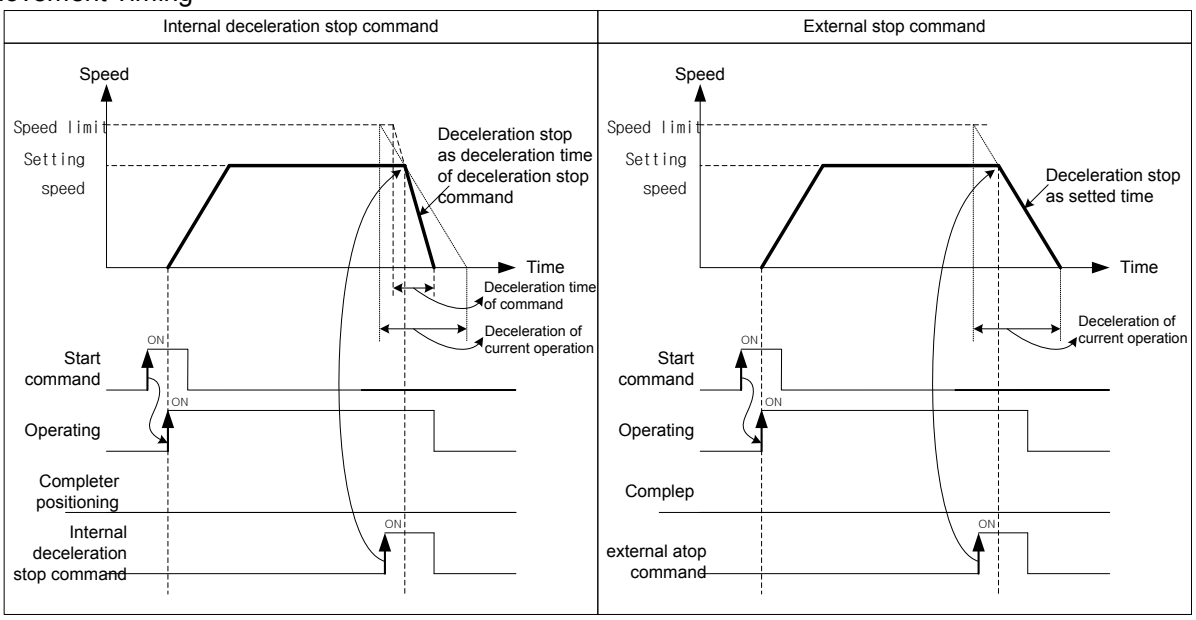

■ If the deceleration distance is longer than distance to target position when input deceleration stop command during positioning control operation, it will be stopped at the target position.

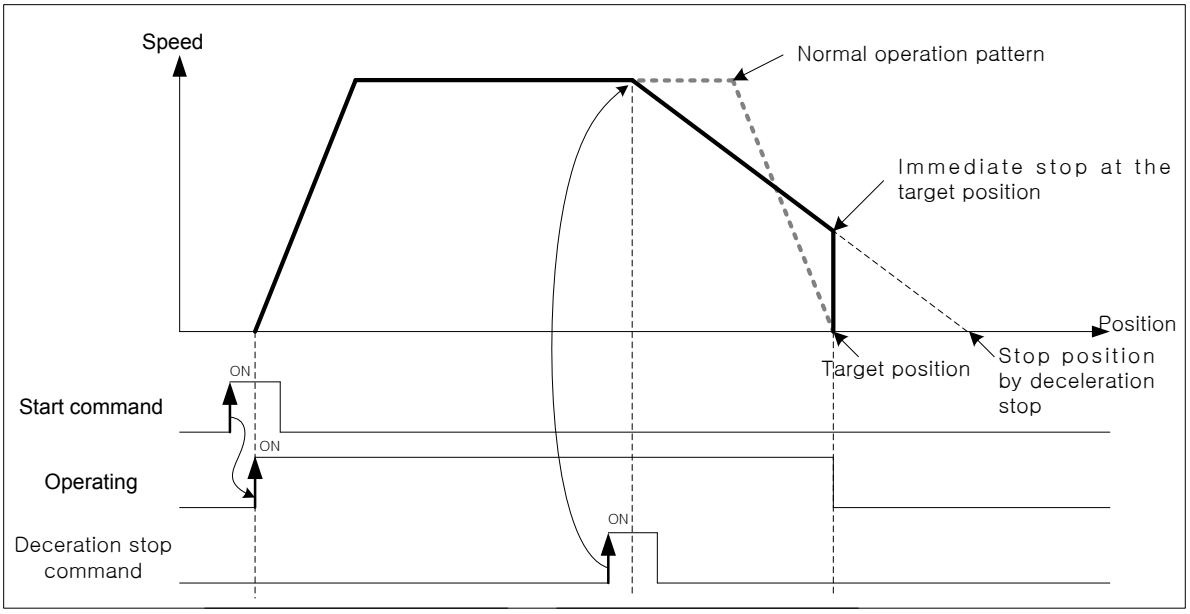

(3) Emergency Stop

(a) It will be decelerated, stopped and occurred error as set time in「deceleration time when it is suddenly stopped」during indirect start, direct start, start at the same time, synch. operation, homing operation, jog operation, inching operation, when it be emergency stopped during operation.

(b) In case of internal emergency stop, error 481 will occur and in case of external emergency stop, error 491 will occur.

(c) M code signal will be "Off" after Emergency stop.

(d) There are two type of Emergency stop: External emergency stop and Internal emergency stop.

- Internal emergency stop command
  To be decelerated and stopped by「emergency stop」command of XG-PM & Sequence program as set time in「deceleration time when it is suddenly stopped」, and error will be occurred.
- External emergency stop signal
  In case of inputting signal of external emergency stop/ deceleration stop to be "On", it will be decelerated, stopped and error will be occurred as set time in 「deceleration time when it is suddenly stopped」of basic parameter.
  Have to set "select external emergency stop/deceleration stop" of expansion parameter for using signal of inputting external emergency stop/deceleration stop as "external emergency stop command"

Item	Setting value	Contents
Select external emergency stop/ deceleration stop	0 : Emergency stop	Use as "emergency stop" signal when input external signal
	1 : Deceleration stop	Use as "deceleration stop" signal when input external signal

■ Setting related parameter (Basic parameter)

Item	Setting value	Contents
When sudden stop, deceleration time	0 ~ 2147483647 [ms]	Set deceleration time for using when detect hardware high/low limit signal. Deceleration time express needed time for deceleration as bias speed at speed limit, when suddenly stop.

(e) Motion timing

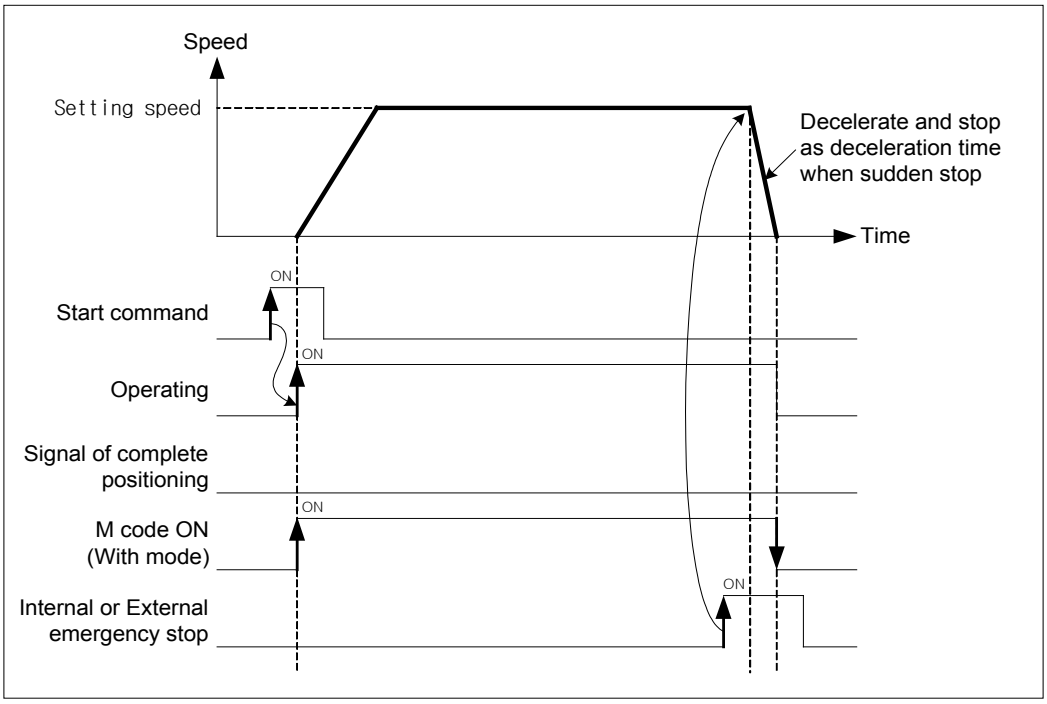

(4) Stop hardware by high/low limit

(a) When positioning control, if the signal of hardware high/low limit is inputted, then stop positioning control and it will be decelerated and stopped as set time at 「deceleration time when it is suddenly stopped」, and error will be occurred.

(b) In case of external input stroke high limit error, error 492 will occur and in case of external input stroke low limit error, error 493 will occur.

■ Setting related parameter (basic parameter)

Item	Setting value	Content
When sudden stop, deceleration time	0 ~ 2147483647 [ms]	Set deceleration time for using when detect hardware high/low limit signal. Deceleration time express needed time for deceleration as bias speed at speed limit, when suddenly stop.

(c) Motion timing

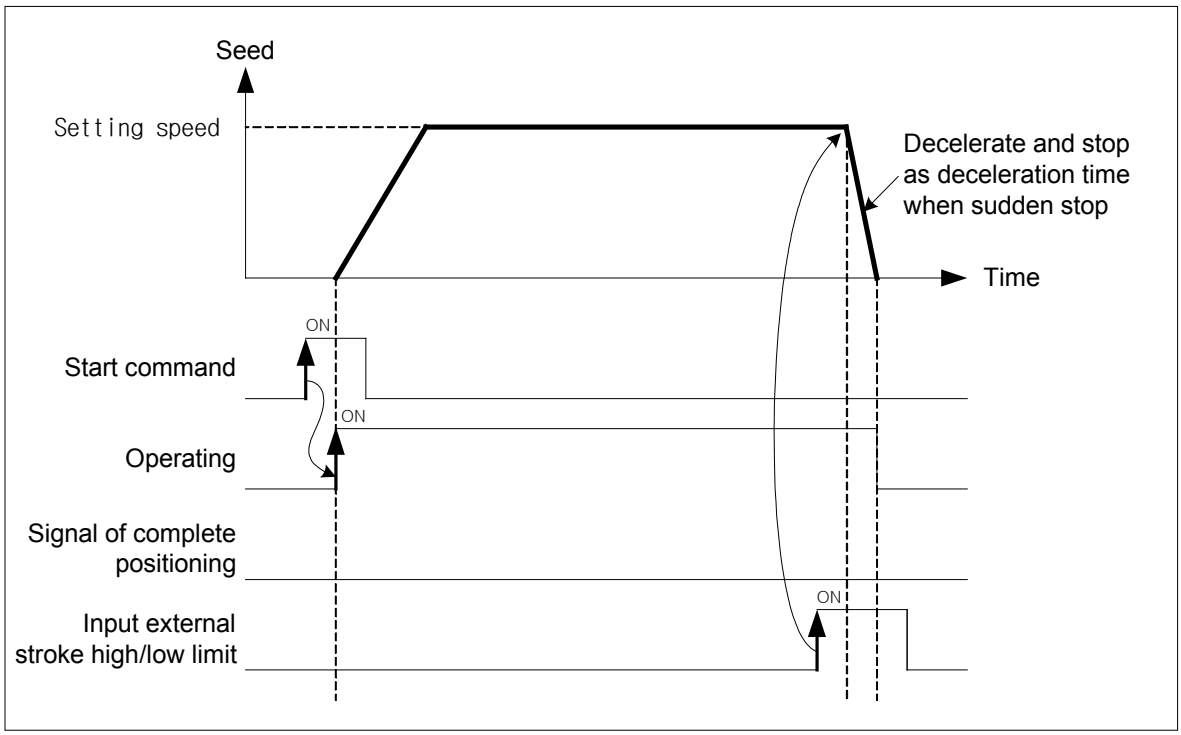

(5) Stop by software high/limit

(a) When positioning control, if value of current command position out of set value of expansion parameter in 「software high limit」 and 「software low limit」 , it will promptly be stopped without outputting value of command position.

(b) If value of command position to be out of software high limit range, will occur error 501, and if it to be out of software low limit range, will occur error 502.

■ Setting related parameter (expansion parameter)

Item	Setting value	Contents
Software high limit	-2147483648 ~ 2147483647	Set position of software high limit.
Software low limit	-2147483648 ~ 2147483647	Set position of software low limit.

(c) Condition

Software high/low limit not to be checked in the following case:

- In case of setting Software high/low limits as maximum (2147483647), minimum (-2147483648)
- In case of “Software high limit = Software low limit”

(d) Motion timing

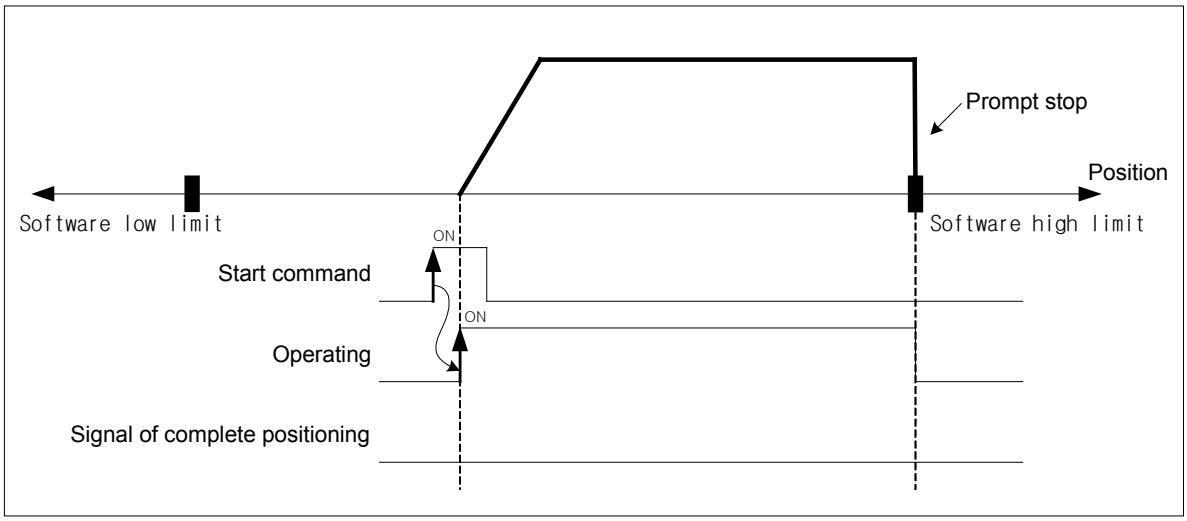

(6) The priority of stop process

The priority of stop process of positioning module is as follows:

Deceleration stop < Sudden stop

When encounter factor of sudden stop in deceleration stop of positioning, it will be suddenly stopped. In case of sudden top deceleration time bigger than deceleration stop time, it will be decelerated and stopped as set deceleration stop time.

Note

Process is as follows, when factor of sudden stop is occurred during deceleration stop.

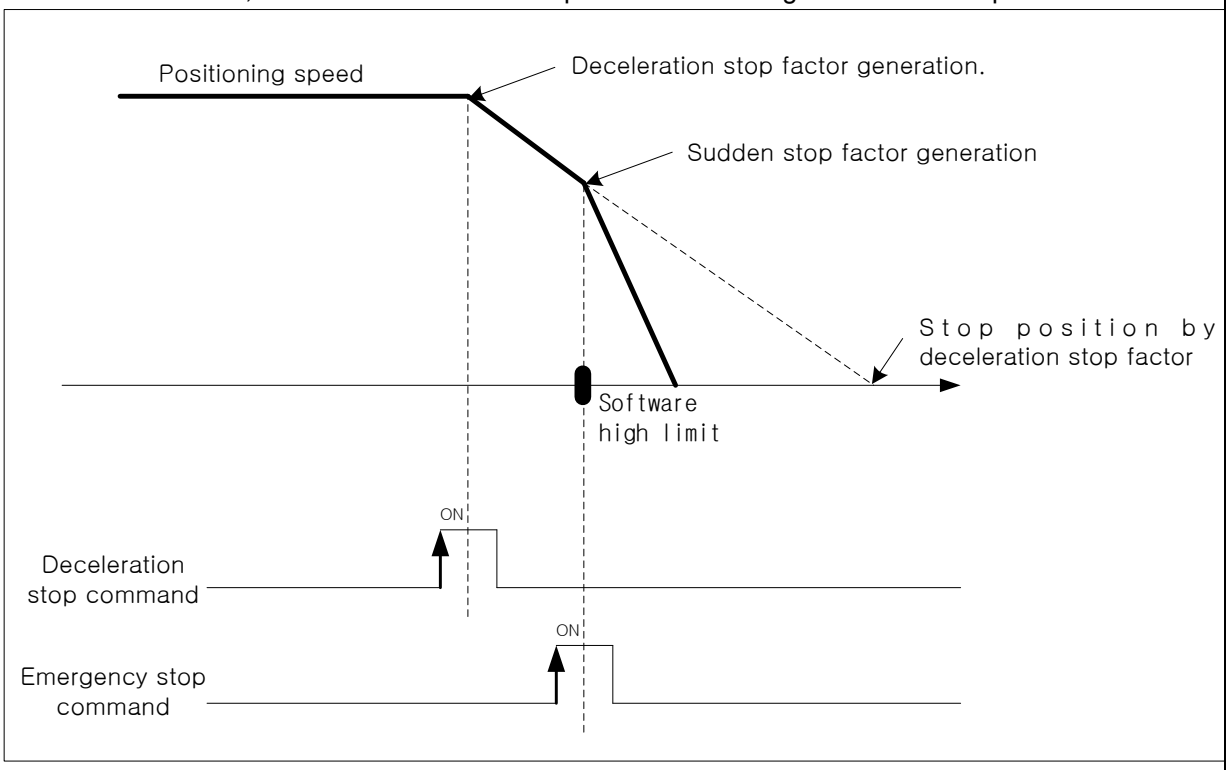

The factor of sudden stop : Emergency stop command or software high/low limit

(7) Stop command under interpolation operation

(a) If encounters stop command during interpolation operation (linear interpolation, circular interpolation, helical interpolation, elliptic interpolation), it carries out the deceleration stop. It depends on the trace of wheels of origin.

(b) When it restarts after deceleration stop, indirect start command carries out operation to target position of positioning. And then, operation depends on absolute coordinate and relative coordinate.

(c) Stop command during interpolation operation can external/internal deceleration stop.

(d) Deceleration stop command should be progressed at main axis which is operating for interpolation.

(e) Operation pattern

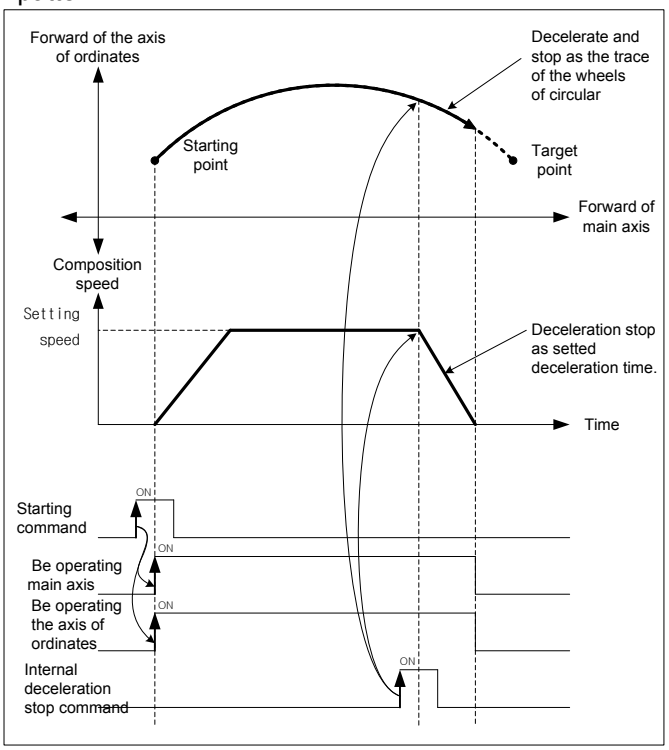

(8) Restart after Positioning stop

(a) Deceleration stop

When indirect start after deceleration stop, operate positioning as set operation step.

In case of using with mode, Signal “On” of M code has to “Off” for restart.

Signal On of M code have to be changed “Off” by「Cancellation M code (XMOF)」command.

(b) Restart after Internal/External emergency stop

In case of emergency stop, signal On of M code will automatically be “Off”, therefore can operate positioning as set operation step, when it operate indirect start.

9.2.19 Setting position output

The setting position output is a function that execute output signal when it reaches set position without motor stop.

(1) Characteristic of Control

(a) Signal will be output through the deviation counter clear/setting position signal output pin of positioning module when setting position output function enable and present position reaching setting position of setting position output data area.

(b) User may set the data number of output position and keeping time of output with setting position output enable/disable command. The setting position output signal will off automatically after pass by keeping time. When execute the setting position signal output function with disable, the setting position signal turn off instantly.

(c) When setting “Module output signal selection” parameter as “1: Setting position output”, you can use “Setting position output” function.

■ Parameter setting (Manual Parameter)

Item	Setting value	Description
Module output signal selection	0: Deviation counter clear	Use as "Deviation counter clear" signal after complete homing.
	1: Setting position output	Module output signal is used as “Setting position output” signal.

(d) User may set the position output of setting position data with “Write Variable Data” command.

Each axis position data address of the setting position output used in write variable data is as follows.

	Axis 1	Axis 2	Axis 3	Axis 4
Output position 1	53818	53918	54018	54118
Output position 2	53820	53920	54020	54120
Output position 3	53822	53922	54022	54122
Output position 4	53824	53924	54024	54124
:	:	:	:	:
Output position 50	53916	54016	54116	54216

After executing “Write Variable Data” command, data is saved to RAM, since the changed value is maintained while power is on, in order to keep the changed value, execute “Save parameter/Operation data” command.

(e) Auxiliary data setting of “Setting Position Output Enable/Disable” command.

Item	Setting value	Description
No. of data	0 ~ 50	Sets the data number of setting position output signal. (Prohibit the output when set to zero)
Keeping time	0 ~ 65535	Sets the keeping time of output signal. (Default: 1ms)
Enable/Disable	0: Disable, 1: Enable	Sets the enable/disable of “Setting Position Output” command.

(2) Operation timing

In case position data is set 3000, 6000, 10000, number of data = 3, keeping time = 5 ㎳, its operation is set enable with “Setting Position Output” command.

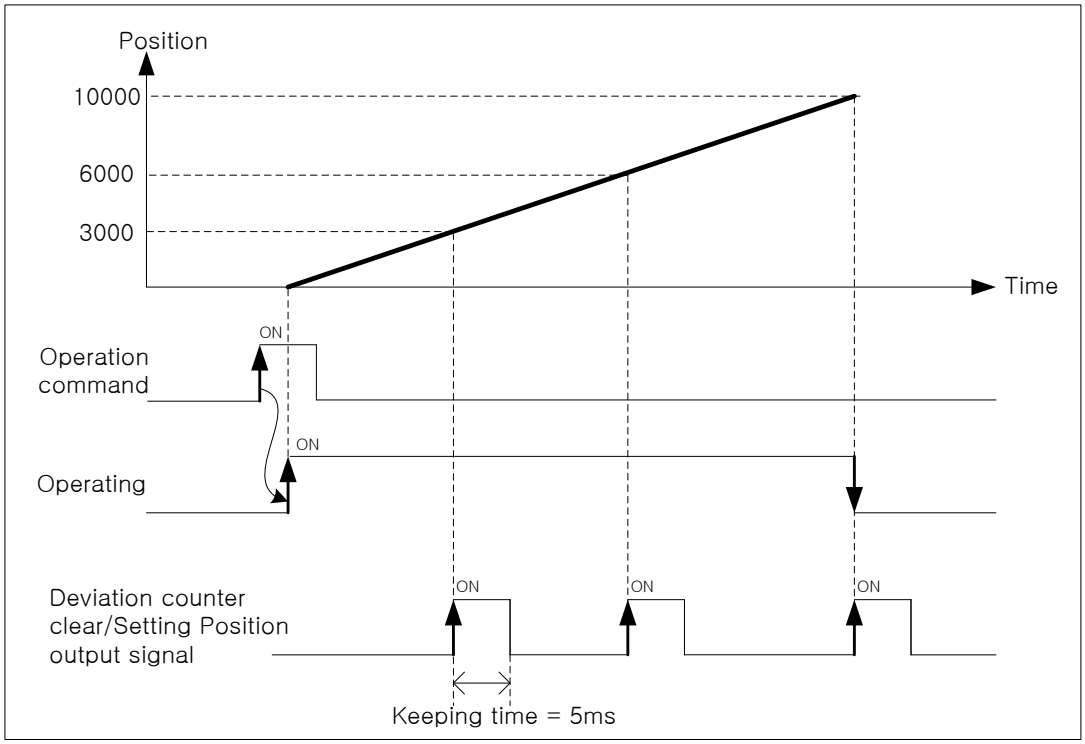

(3) Restrictions

(a) In case error is occured, setting position output function can not be executed.

■ If “Module Output Signal Selection” of expansion parameter has set ‘0: Deviation counter clear’. (Error code: 731)

■ If the number of data of “Setting Position Output Enable/Disable” command exceeds maximum 50. (Error code: 732)

(b) In the case below, the setting position output is set disable.

- Power on, CPU reset and RUN/STOP
- Changed the ‘Unit’ of basic parameter, (if the unit is not pulse) ‘No. of pulse per 1 rotation’, ‘Transfer distance per 1 rotation’, ‘Double precision of unit’.
- Changed the ‘Module output selection’ of expansion parameter, ‘Infinite running repeat enable/disable’, ‘(if Infinite running repeat is set enable) Infinite running repeat position’.
- Set the position output of setting position data with “Write Variable Data” command.

Note

The actual keeping time of ‘Setting Position Output’ signal is not same as set keeping time with ‘Setting Position Output Enable/Disable’ command. Approximately +1ms keeping time error may occur.

9.3 Manual Operation Control

Manual control is a function that execute random positioning according to user's demand without operation data Manual operations include Jog operation, Manual pulse generator operation, inching operation, previous position movement of manual operation etc.

9.3.1 Jog Operation

(1) Characteristic of Control

(a) Jog Operation is

- Execute positioning control at jog high/low speed depending on the signal of high/low speed during forward/reverse jog start signal is being ON.
- Positioning is started by Jog command from the state that the origin is determined. The value of positioning stars changing, user can monitor it.
- This is a way of manual operation that can be executed before determination of origin.

(b) Acceleration/Deceleration process and Jog speed

The acceleration/deceleration processing is controlled based on the setting time of Jog acceleration/ deceleration time from XG-PM manual operation parameter setting.

Set the Jog speed on Jog high/low speed of XG-PM manual operation parameter setting.

If Jog speed is set out of the setting range, error will occur and the operation does not work.

■ Parameter setting (Manual Parameter)

Item	Setting value	Description
Jog High Speed	1 ~ Speed limit	Set Jog speed. Jog high speed must be set below limit
Jog Low Speed	1 ~ Jog High Speed	Set Jog speed. Jog low speed must be set below Jog high speed
Jog Acc. Time	0 ~ 2147483647	Set the acc. Time used in acceleration of Jog operation
Jog Dec. Time	0 ~ 2147483647	Set the dec. time used in deceleration of Jog operation

Note

If "Jog Acc. Time" is 0, it operates at "Acc. Time1" of basic parameter.
If "Jog Dec. Time" is 0, it operates at "Dec. Time1" of basic parameter.

(2) Operation Timing

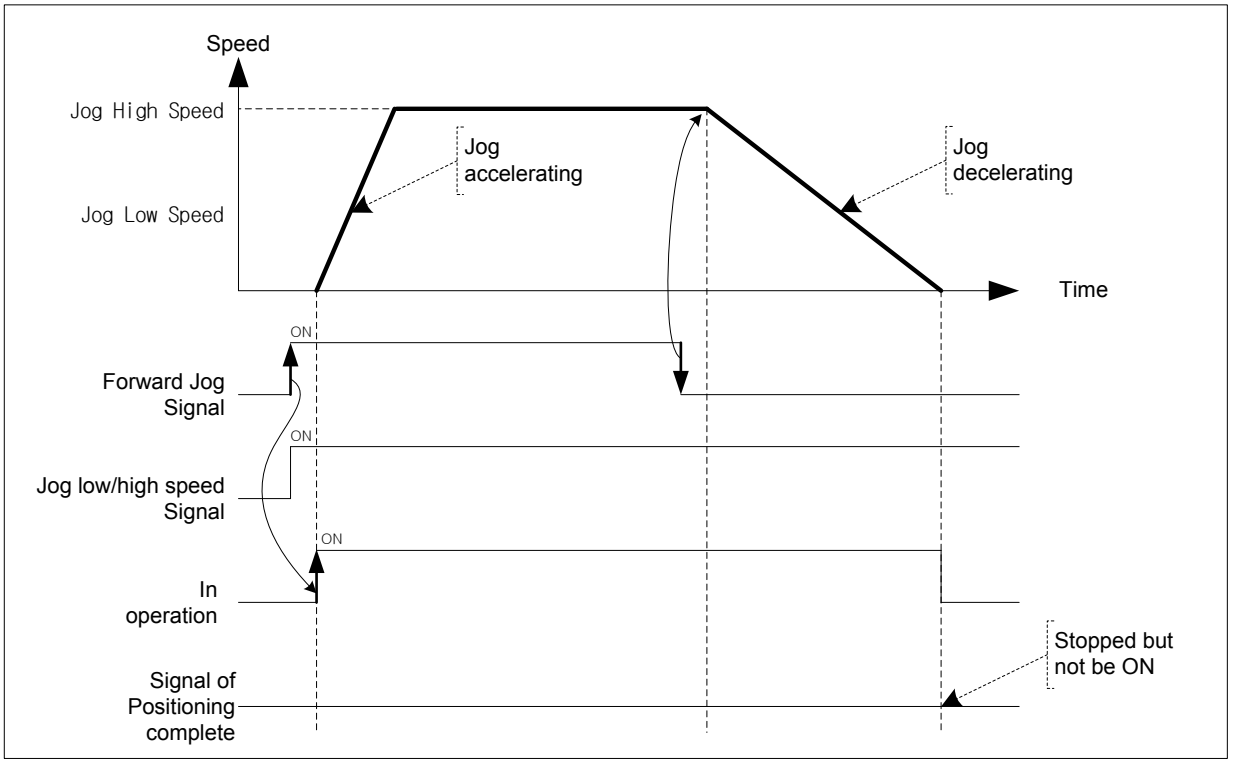

Note

Notices for setting Jog speed are as follows.

Jog Low Speed ≤ Jog High Speed ≤ Speed Limit

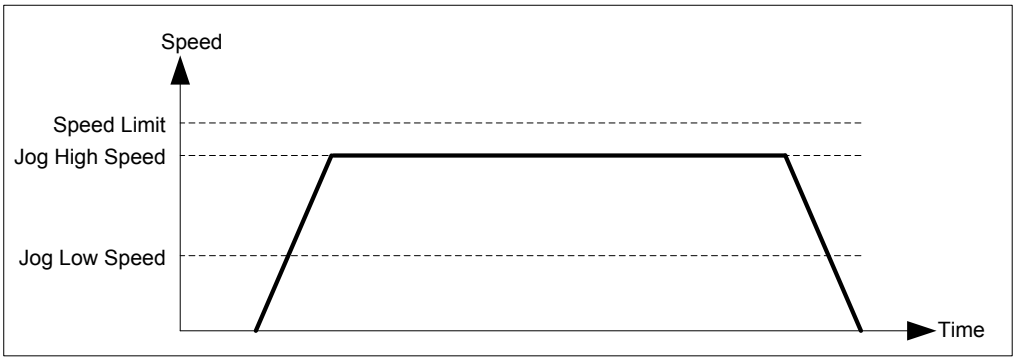

(3) Restrictions

You can not execute Jog operation in the case as follows.

(a) Value of Jog High Speed exceeds the speed limit of basic parameter (Error code : 121)

(b) Value of Jog Low Speed exceeds the value of Jog high speed. (Error code : 122)

(4) Jog Operation Start

Jog operation start consists of Start by XG-PM and Start by Sequence program. The start by sequence program is that execute Jog operation with output contact of CPU.

Axis	Direction of Signal : CPU -> Positioning module	
	Output Signal	Description
Axis1	UXX.01.0	Axis1 Forward Jog
	UXX.01.1	Axis1 Reverse Jog
	UXX.01.2	Axis1 Jog Low/High Speed
	UXX.01.3	-
Axis2	UXX.01.4	Axis2 Forward Jog
	UXX.01.5	Axis2 Reverse Jog
	UXX.01.6	Axis2 Jog Low/High Speed
	UXX.01.7	-
Axis3	UXX.01.8	Axis3 Forward Jog
	UXX.01.9	Axis3 Reverse Jog
	UXX.01.A	Axis3 Jog Low/High Speed
	UXX.01.B	-
Axis4	UXX.01.C	Axis4 Forward Jog
	UXX.01.D	Axis4 Reverse Jog
	UXX.01.E	Axis4 Jog Low/High Speed
	UXX.01.F	-

[Example] Execute Jog start in the order as follows.

■ Forward Jog Low speed Operation -> Forward Jog High speed Operation -> Stop

Reverse Jog High speed Operation -> Reverse Jog Low speed Operation -> Stop

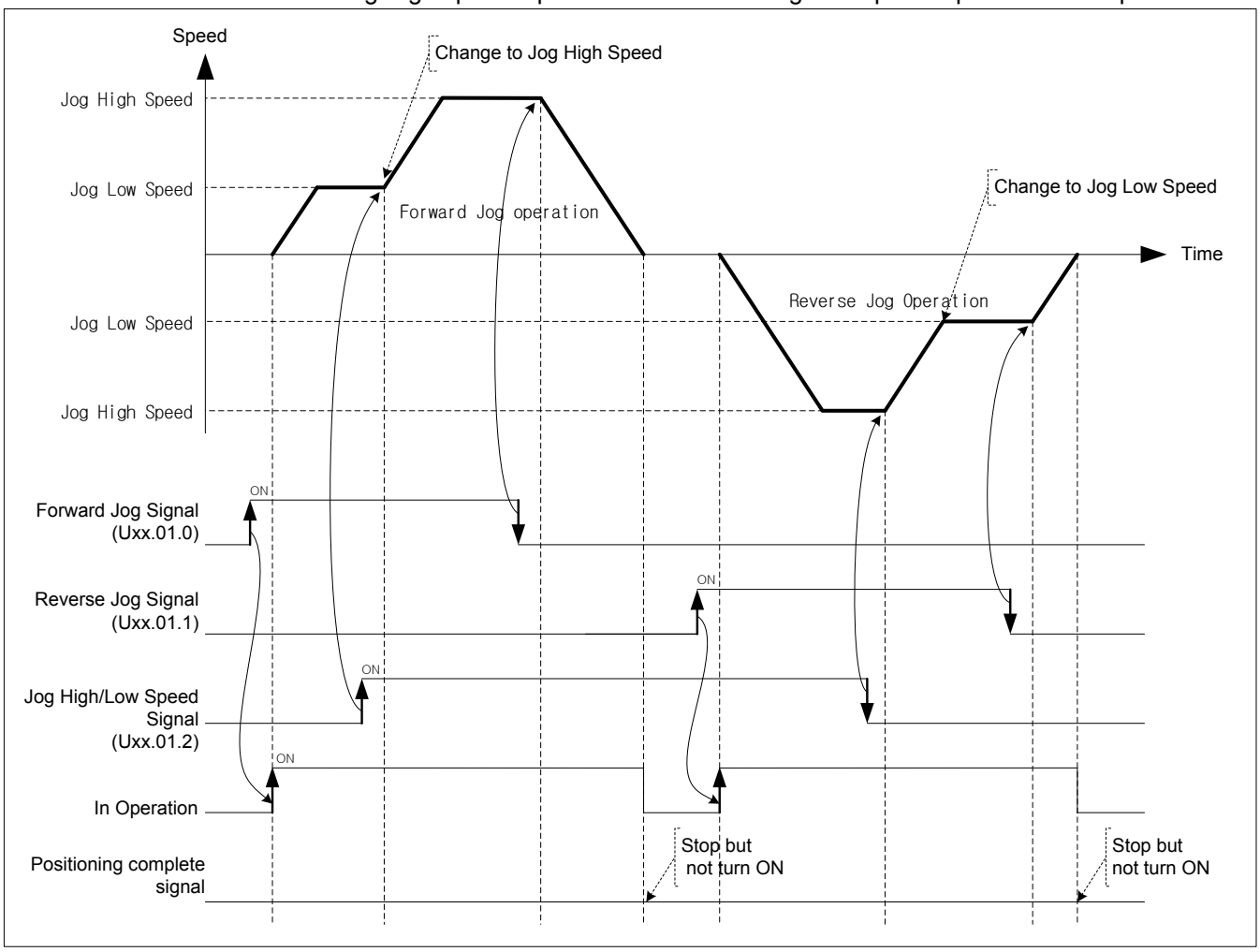

Note

Dec. stop command will not be executed in Jog Operation.
Jog operation will stop if turn the Jog signal of the current operating direction Off.

9.3.2 Inching Operation

This is a kind of manual operation and executing positioning at the speed already set on manual operation parameter as much as the amount of movement already set on the data of inching operation command.

(1) Characteristics of Control

(a) While the operation by ON/OFF of Jog signal is difficult in moving to the correct position as the operation starts and stops according to the command, the inching command enables to set the desired transfer amount easily and reach the goal point.

(b) Thus, it is available to reach the correct goal position by moving fast near the working position by Jog command and operating the detail movement by inching command.

(c) The setting range is –2147483648 ~ 2147483647 Pulse.

(d) The direction of moving depends on the amount of inching.

■ The amount is POSITIVE(+) : Positioning operation in forward direction

■ The amount is NEGATIVE(-) : Positioning operation in reverse direction

(e) Acc./Dec process and Inching speed

Use Jog acc./dec. Time of manual operation as acc./dec. time of Inching operation.

Set Jog acc./dec. time on “Jog acc./dec. time” of manual operation parameter setting of XG-PM.

Set Inching speed on “Inching speed” of manual operation parameter setting.

If inching speed is set out of the setting range, error will occur and the operation does not work.

■ Related parameter setting (Manual operation parameter)

Items	Setting value	Description
Jog acc. Time	0 ~ 2147483647	Set the accelerating time for acceleration of Inching operation
Jog dec. Time	0 ~ 2147483647	Set the decelerating time for deceleration of Inching operation
Inching Speed	1 ~ Speed limit	Set the speed of Inching operation

(2) Operation Timing

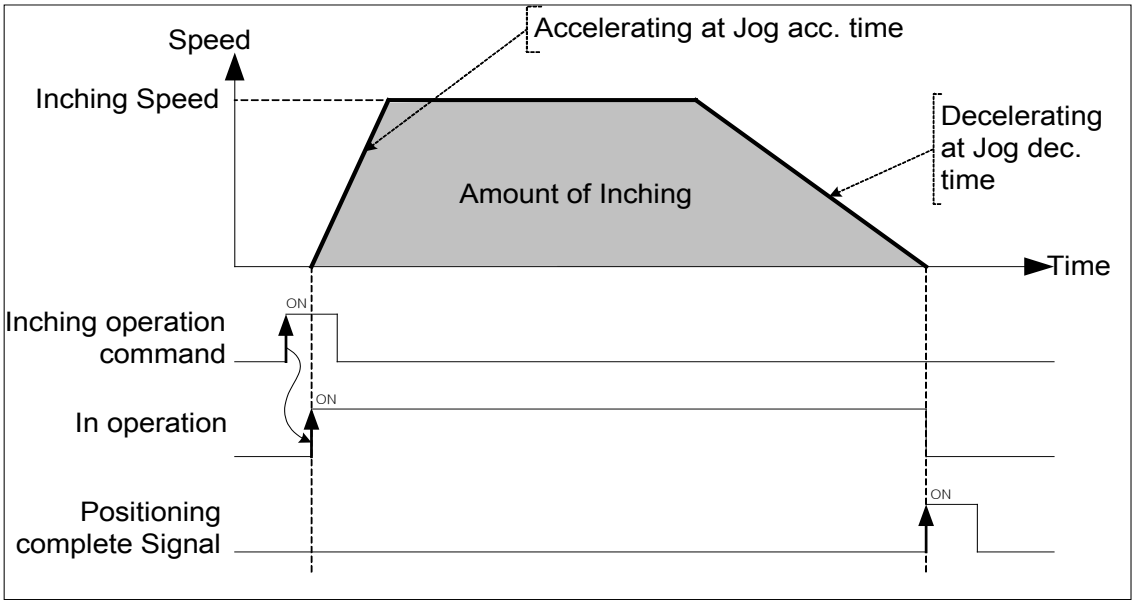

9.3.3 Returning to the previous position of manual operation

This positioning control function is used to return to the position address that the positioning is completed before manual operation when the position is changed by manual operation (Jog operation, inching operation).

(1) Characteristic of Control

(a) Direction of moving depends on the current position and the previous position of manual operation.

■ Starting position < The previous position of manual operation : Forward direction

■ Starting position < The previous position of manual operation : Reverse direction

(b) Acc./Dec. process and the speed of return

Acc./Dec. time of returning is the same as homing acc./dec. time of homing parameter.

Set acc./dec. time on homing acc./dec, time of homing parameter of XG-PM.

If returning speed is set out of the setting range, error will occur and the operation does not work.

■ Related parameter setting (Homing Parameter)

Item	Setting value	Description
Homing speed	1 ~ Speed limit	Set returning speed
Homing acc. time	0 ~ 2147483647	Set acc. time used in return
Homing dec. time	0 ~ 2147483647	Set dec. time used in return

(2) Operation timing

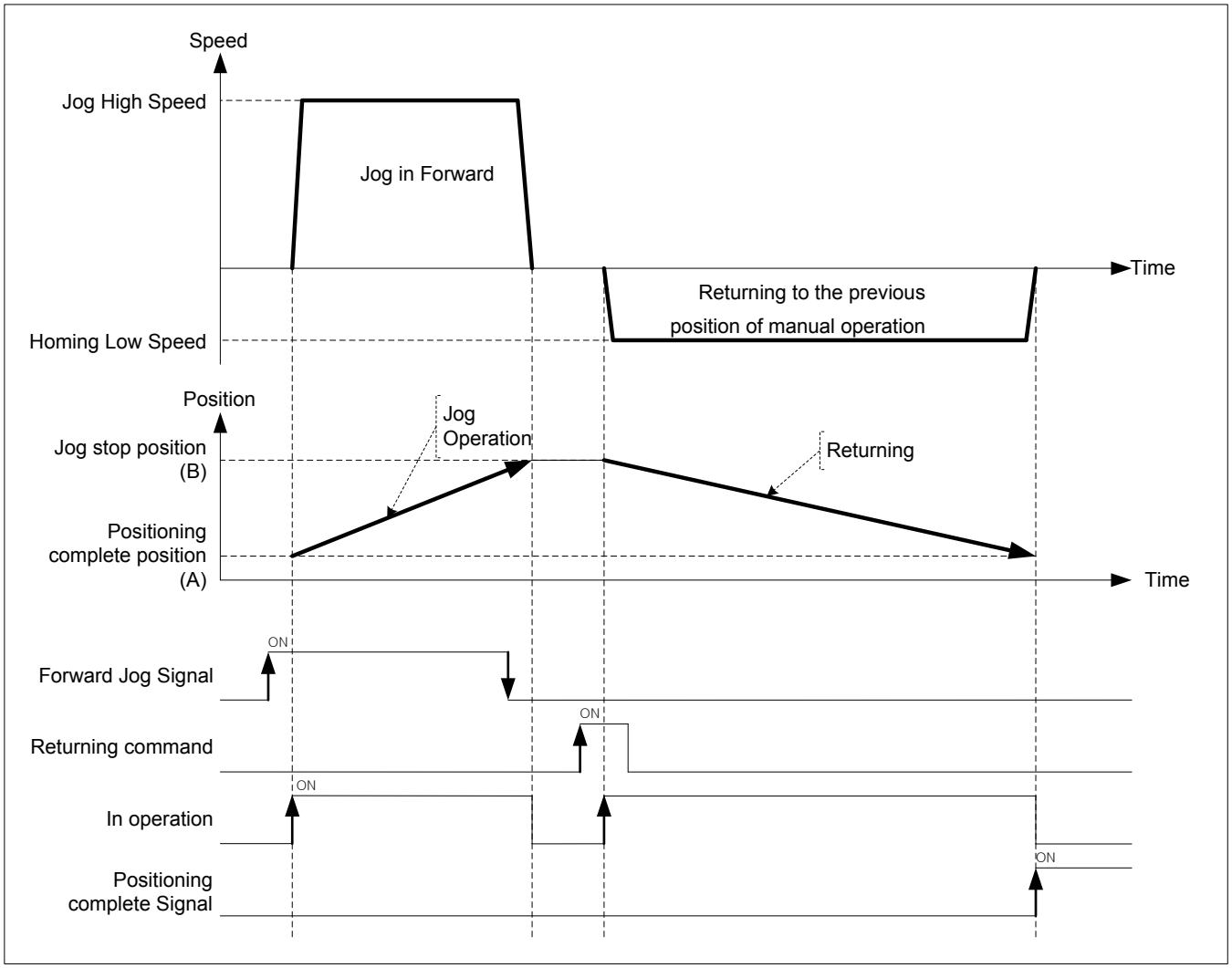

If value of the current position is “A” after positioning control operation and the positioning value changed by Jog operation is “B”, execute positioning to “A” when executing the returning to the previous position of manual operation.

9.4 Synchronous Control

This is the command that control the operation synchronizing with the main axis or operating of encoder.

9.4.1 Speed Synchronous Control

This is the command that synchronize with sub axis in speed and control operation depending on speed synchronous rate already set when main axis starts.

(1) Characteristic of Control

(a) Start and Stop is repeated depending on operating of main axis after execution of speed synchronous command. The operating direction of sub axis and the main's are same.

(b) The operating direction of sub axis depends on the ratio of speed sync. $(\frac{SubAxis}{MainAxis})$. If it is positive, the direction is forward. If it is negative, the direction is reverse.

(c) If execute speed sync. command, it will be the state of operating and remain in the state of speed sync. operation before release of speed sync. command.

(d) Auxiliary data of speed sync. command

The auxiliary data used in speed sync. command is as follows.

Item	Setting value	Description
Main Axis	1(axis1) ~ 4(axis4), 9(Encoder)	Set the main axis of speed sync.
Ratio of Main axis	-32768 ~ 32767	Set the ratio of main axis at speed sync. ratio.
Ratio of Sub axis	-32768 ~ 32767	Set the ratio of sub axis at speed sync. ratio..

Ratio of Speed sync. is calculated as follows.

$$Ratio = \frac{SubAxis}{MainAxis}$$

It is possible to set like "Ratio of Main axis(Absolute) < Ratio of Sub axis(Absolute)" at setting ratio of speed sync.

Operating speed of sub axis is calculated as follows.

$$\begin{aligned} Operaing\ \ speed\ \ of\ \ SubAxis &= Operating\ \ Speed\ \ of\ \ MainAxis \times Ratio\ \ of\ \ speed\ \ sync. \\ &= Operating\ \ Speed\ \ of\ \ MianAxis \times \frac{Ratio\ \ of\ \ SubAxis}{Ratio\ \ of\ \ MainAxis} \end{aligned}$$

(e) Modifying the ratio of speed sync. in operation is available.

When modify the ratio, if there is too big gap between the former ratio and the current ratio, the machine is possible to be damaged.

(2) Operation Timing

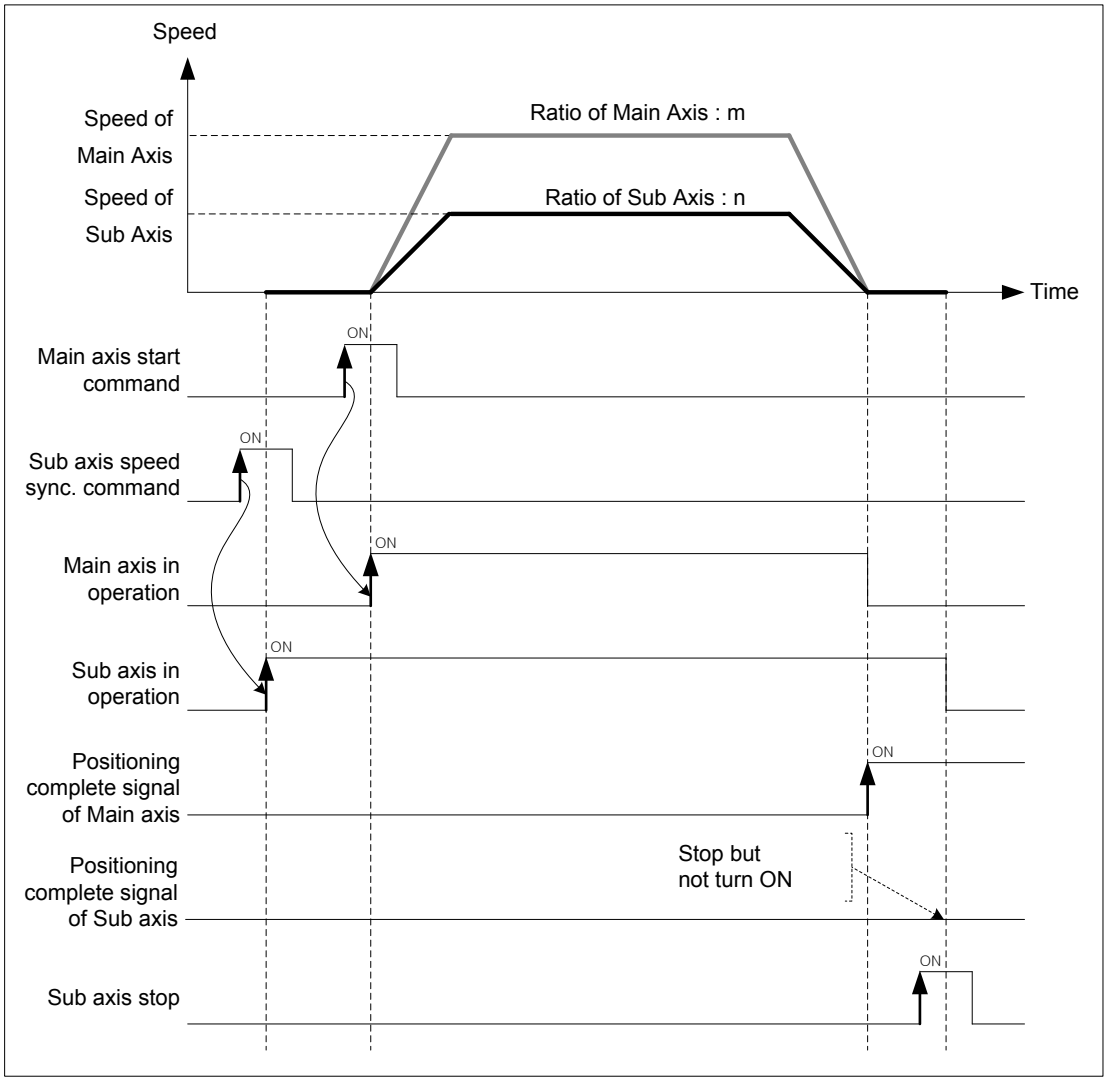

(3) Restrictions

You can not execute Jog operation in the case as follows.

(a) If speed sync. is executed in being On of M code signal, error (code:353) arises. Make M code “off” with M code release command (XMOF) before use.

(b) In the case that the axis set as main axis is not the axis can be set or the case that the setting of main axis is the same as the setting of command axis, error (code”355) arises. Set the main axis among the axis available to be set.

(c) If the speed of main axis exceeds the speed limit, error (code:357) arises. In the case, the speed of main axis has to be down below the speed limit.

In the case that the speed of main axis exceeds the speed limit, error arises and it decelerate in “Dec. time of emergent stop”.

[Example] axis1 is main axis, axis2 is sub axis. Operate at "ratio of main axis : ratio of sub axis = 2 : 1" at the beginning and then execute speed sync. control changing the ratio to "ratio of main axis : ratio of sub axis = 1 : 2"

■ Example of setting in XG-PM

▪Operation data of main axis(axis1)

Step no.	Control method	Operation method	Goal Position [pls]	Operating speed [pls/s]	Acc. no.	Dec. no.	M code	Dwell Time
1	Relative, Reduction position control	Single, End	10000	2000	No. 1	No. 1	0	0

■ Operating pattern

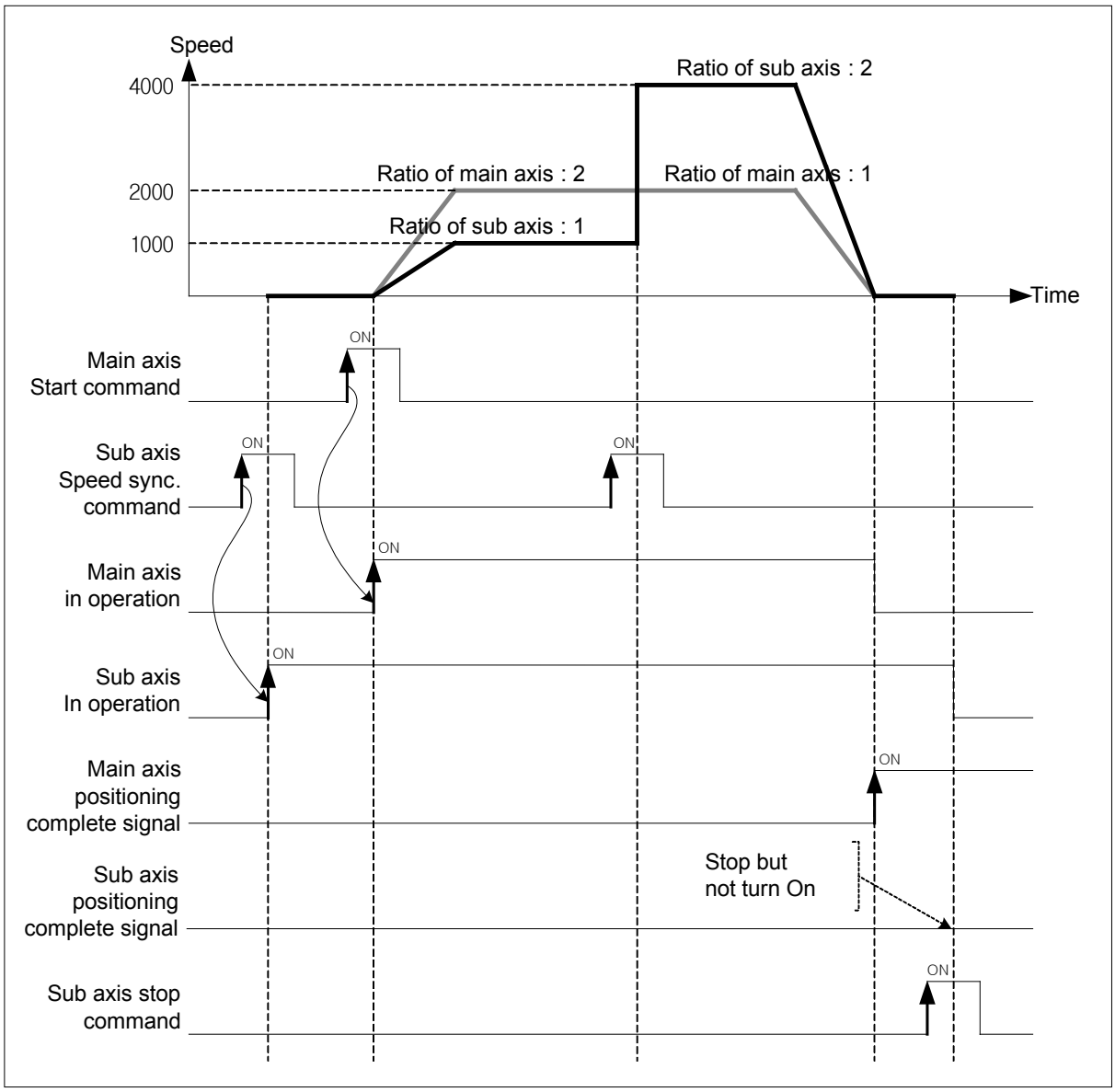

(4) Speed synchronous control with encoder

(a) Set encoder as the main axis of speed sync. and execute positioning control by ratio of speed sync. that consists of pulse speed from encoder, ratio of main axis and ratio of sub axis.

(b) This command is used in the case that executing thorough positioning manually.

(c) After executed speed sync. command, when the pulse string is inputted, speed sync. control starts.

(d) Operate regardless of the state of origin.

(e) The pulse inputted by encoder increase of decrease the position value of encoder.

(f) The direction of moving depends on encoder pulse input mode and ratio of speed sync,

■ Encoder direction in PHASE A/B 1multiplying

- Positioning in forward direction : Input pulse of A phase is ahead of B's
- Positioning in reverse direction : Input pulse of B phase is ahead of A's

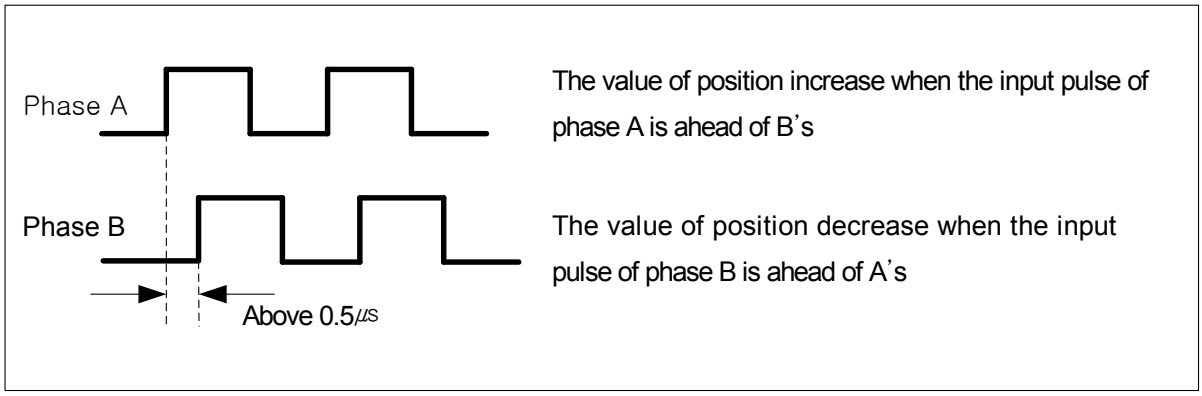

- The operating direction of sub axis depends on $Ratio\ of\ speed\ sync.(\frac{Ratio\ of\ SubAxis}{Ratio\ of\ MainAxis})$. If it is positive, operating direction will be forward direction of encoder. If it is negative, operating direction will be reverse direction of encoder.

(g) Related parameter (Common Parameter)

Set parameter related to encoder on common parameter.

Item	Setting Value	Description
Encoder Pulse Input	0 : CW/CCW 1 multiplying 1 : PULSE/DIR 1 multiplying 2 : PULSE/DIR 2 multiplying 3 : PHASE A/B 1 multiplying 4 : PHASE A/B 2 multiplying 5 : PHASE A/B 4 multiplying	Set the encoder to use in input of encoder
Maximum of encoder	-2147483647 ~ 2147483647	Set the count range with max./min. of encoder
Minimum of encoder	-2147483647 ~ Max. of Encoder	

[Example] Execute speed sync. control with encoder (main axis), axis2(sub axis) at "the ratio of main axis : the ratio of sub axis = 1 : 2".
(Hypothesize that the input speed of encoder is 1Kpps)

When the direction of encoder is forward, the operating direction of sub axis is reverse. When the direction of encoder is reverse, the operating direction of sub axis is forward.

■ Operating pattern

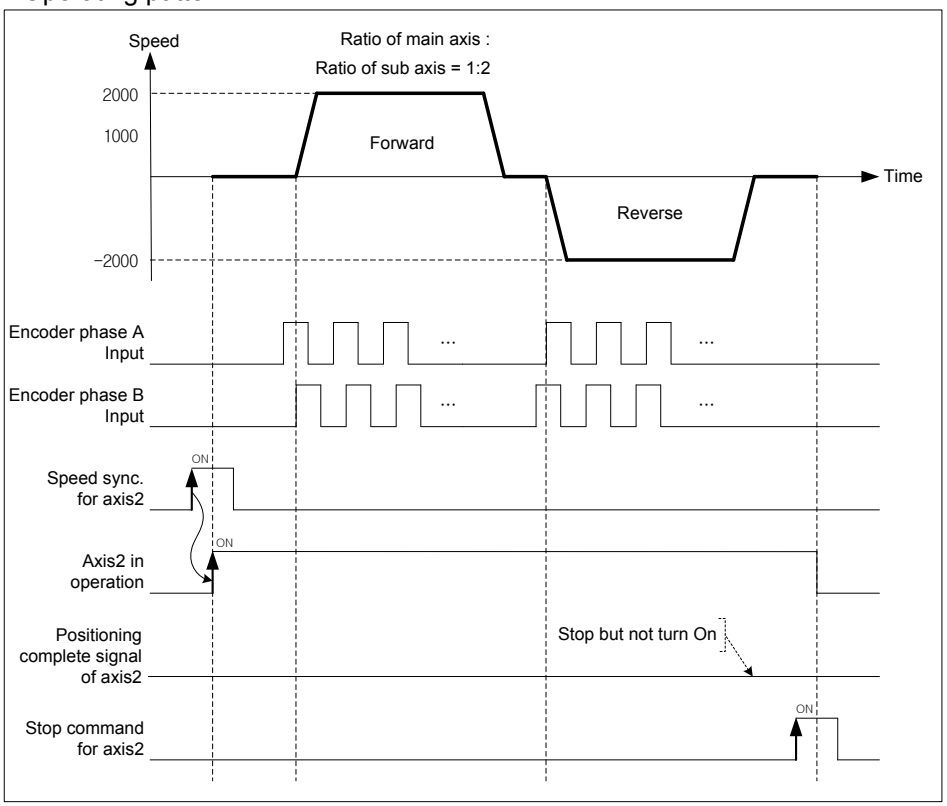

(5) Positioning speed sync. control

(a) The basic operation of positioning speed sync. control is similar to speed synchronization. After executing positioning speed sync. command, start and stop are repeated depending on operation of main axis. The direction of sub axis and the direction of main axis are same.

(b) The operating direction of sub axis depends on $Ratio\ of\ speed\ sync.(\frac{Ratio\ of\ SubAxis}{Ratio\ of\ MainAxis})$. If it is positive, operating direction will be forward direction of main axis. If it is negative, operating direction will be reverse direction of main axis.

(c) If give speed sync. command to sub axis, it will be changed to the operating state and stay at operating state until release command.

(d) If the current position of sub axis become the goal position, it stops speed sync. and stay there. For the details, refer to “Speed sync. control”.

(e) Auxiliary data of positioning speed sync. command.

The auxiliary data used in speed sync. is as follows.

Items	Setting value	Description
Main axis	1(axis1) ~ 4(axis4), 9(Encoder)	Set main axis
Ratio of main axis	-32768 ~ 32767	Set ratio of main axis
Ratio of sub axis	-32768 ~ 32767	Set ratio of sub axis
Goal position	-2147483648 ~ 2147483647	Set the goal position of positioning speed sync.

(f) Operation timing

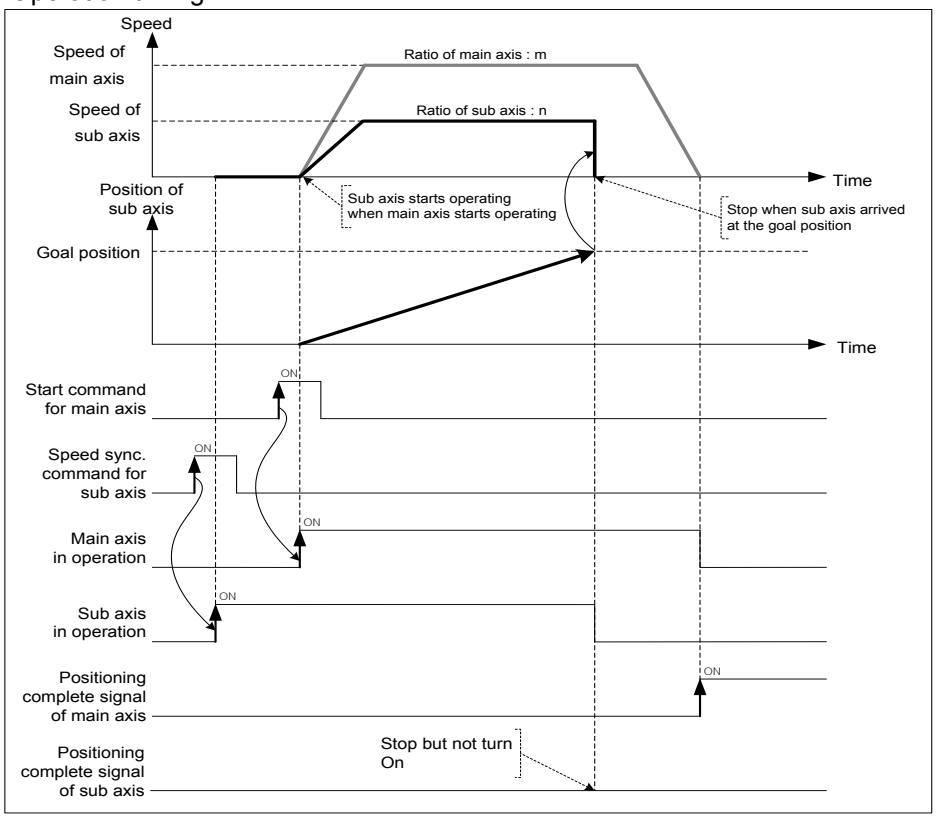

9.4.2 Position synchronous control

Start positioning with step no. and operation data when the current position of main axis is same as the position set in position sync.

(1) Characteristics of control

(a) Synchronous Start by Position (SSP) command is carried out only in case that the main axis is in the origin determination state.

(b) SSP command starts by the synchronization of the subordinate axis according to the current position of the main axis.

(c) SSP carries out the SSP command at the subordinate axis.

(d) If SSP command is executed, it becomes the state in operation and the actual operation is carried out at the subordinate axis where the current position of the main axis is the setting position of the position synchronous start.

(e) In case of cancellation after executing the SSP command at the subordinate axis, if you execute the stop command, the SSP command shall be released.

(f) The auxiliary data of position sync. command

The auxiliary data used in position sync. is as follows.

Items	Setting Value	Description
Position of position sync.	-2147483648 ~ 2147483647	Set the position of main axis in position sync. control
Operation step	1 ~ 400	Set the step no. to be executed when the main axis arrives at the position for position sync.
Main axis	1(axis1) ~ 4(axis4), 9(Encoder)	Set the main axis of position sync.

Note

Even though the current position of main axis and the setting value set on position sync. are not exactly same, if the current position of main axis is at between the position of main axis of previous scan and the current position of main axis, the sub axis will be executed with the positioning data of step no. set on operation step.

(2) Operation timing

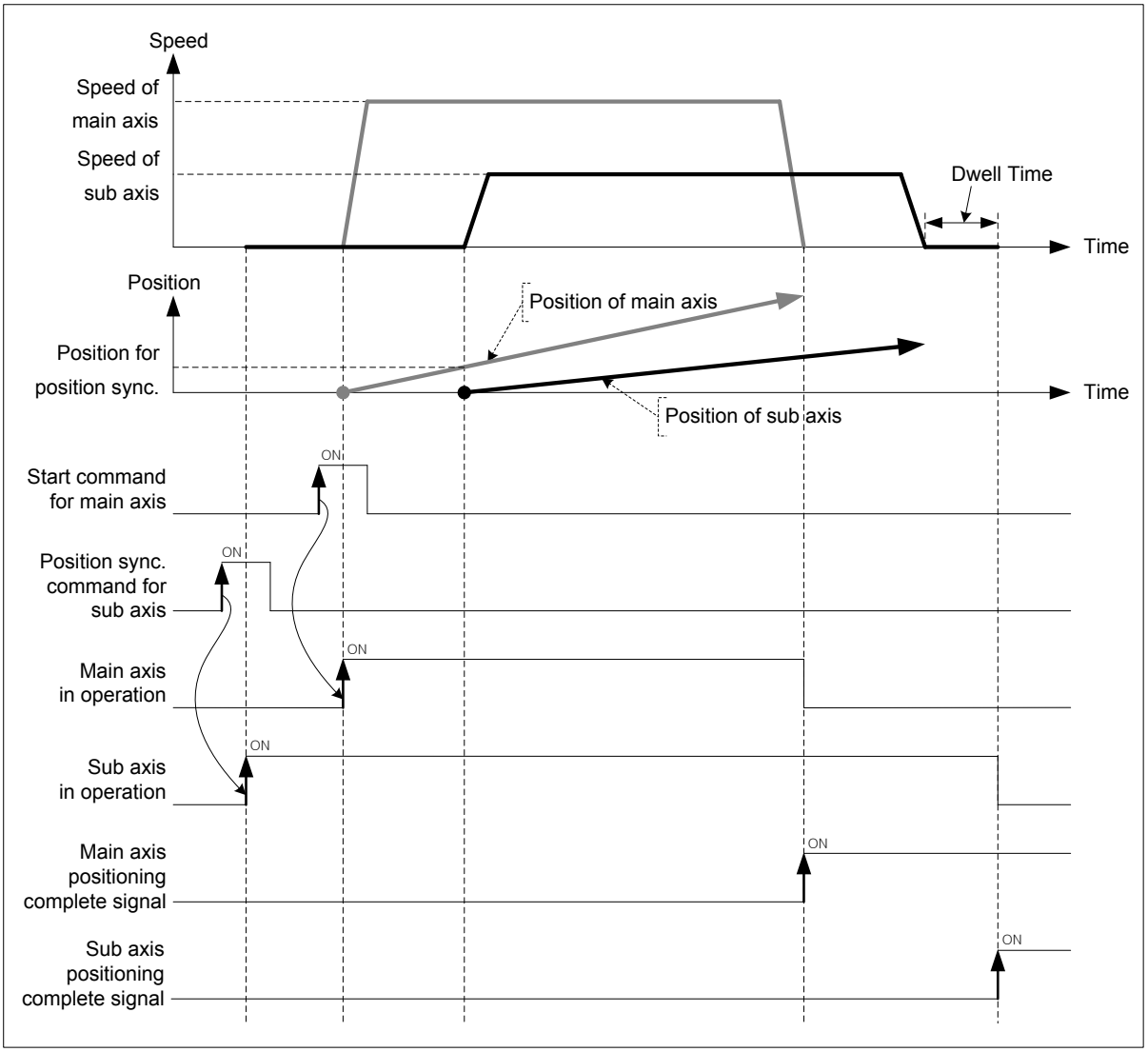

(3) Restrictions

Position sync. control can be executed in the case below.

(a) If position sync. command is executed in M code signal is On, error (code:343) arises. Use it after making M code “Off” with M code release command(XMOF).

(b) If the current main axis is not the axis can be set on the current module or main axis and command axis are the same axis, error (code:355) arises. Set the main axis among one of the axis can be set on module.

[Example] Axis1 is main axis, axis2 is sub axis. The position of main axis for position sync. is 1000, execute position sync. with operation data no.10.

■ The current position of axis1 : 0

The current position of axis2 : 0

■ Example in XG-PM

▪ Main axis (axis1) Operation data

Step no.	Control method	Operation	Goal position [pls]	Operating speed [pls/s]	Acc. no.	Dec. no.	M code	Dwell time
1	Relative, Shortcut position control	Shortcut, End	2000	1000	No. 1	No. 1	0	0

▪ Sub axis (axis2) Operation data

Step no.	Control method	Operation	Goal position [pls]	Operating speed [pls/s]	Acc. no.	Dec. no.	M code	Dwell time
10	Relative, Shortcut position control	Shortcut, End	2000	2000	No. 2	No. 2	0	0

■ Operating pattern

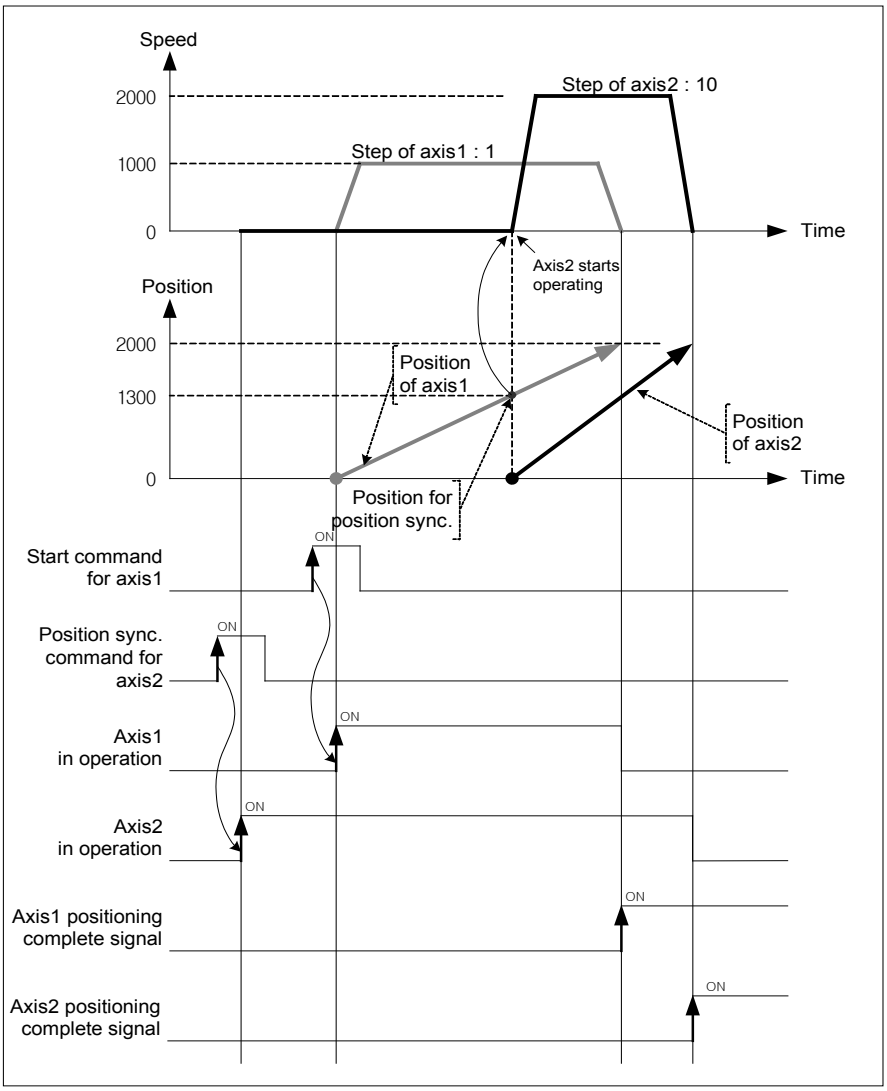

9.4.3 CAM Operation

This is the command that convert mechanical work to CAM data displayed with CAM curve and then execute CAM axis control synchronizing with the position of main motor.

(1) Characteristics of Control

(a) Replace existing mechanical work of CAM with software CAM operation

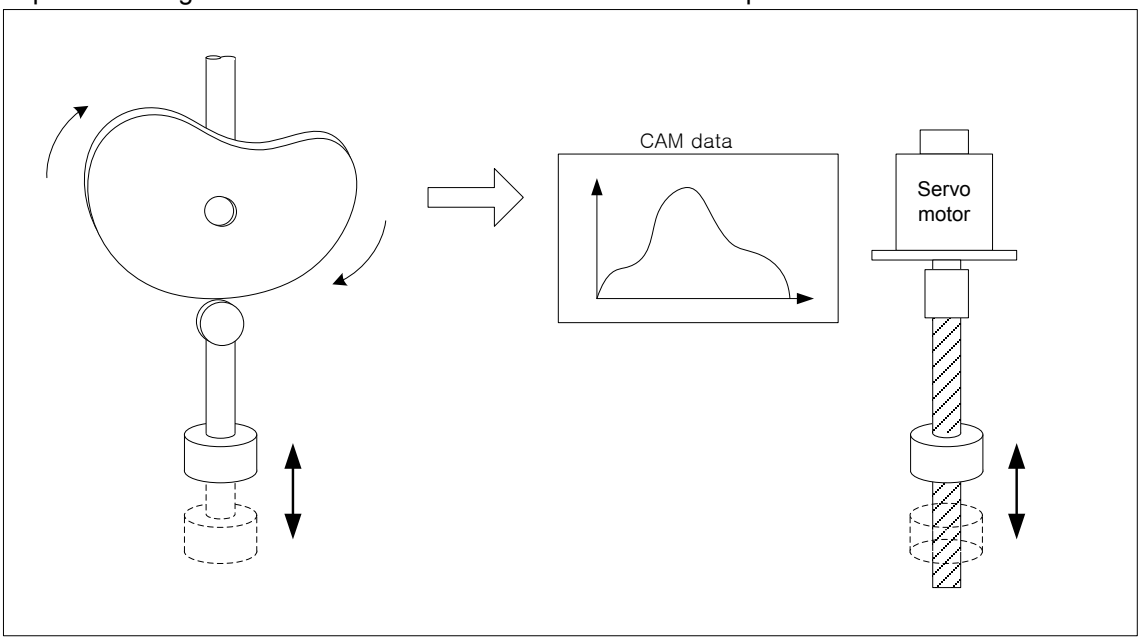

(b) You may write max. 9 CAM data blocks and apply it to each axis.

(c) Each block consists of 2048 CAM data.

(d) Auxiliary data of CAM command

Auxiliary data used in CAM command is as follows.

Item	Setting value	Description
Main Axis	1(Axis1) ~ 4(Axis4)	Set the main axis of CAM operation
CAM block	1(no.1) ~ 9(no.9)	Set CAM block no.
Main axis offset	-2147483648 ~ 2147483647	Set the position of main-axis position as offset value if main-axis reaches this position, the sub-axis starts CAM operation.

Encoder can not be used as main axis.

You may set different CAM block no. for each axis. In addition, it is possible to execute CAM operation with the same CAM block. In order to use user CAM operation, you have to set up CAM block number as 9.

(e) You can make sub-axis start the CAM operation at the specified position of main-axis by setting the “Main axis offset”. Main axis offset setting is available at “Offset specified CAM start command (XCAMO, XPM_CAMO).

(f) Create CAM data by setting CAM parameter on XG-PM to use CAM.

(g) After main axis is operated, input the calculated value per CAM block setting and point unit based on the current value per rotation of main axis. For the detail description, refer to “(3) Principle of CAM operation”.

(h) If CAM operation is executed on sub axis, it become ‘operating status’ and keep executing CAM operation with CAM data according to the position of main axis until stop command.

(2) CAM Parameter

The table below describes the parameter items for writing CAM data.

Item		Setting Range	Description
Main/Sub axis parameter	Unit	pulse, mm, inch, degree	Set unit of main/sub axis
	Transfer distance per 1 rotation	Depending on Unit	Set the transfer distance of main/sub axis per 1 rotation
	No. of Pulse per 1 rotation	1 ~ 200000000	Set no. of pulse of main/sub axis per 1 rotation
CAM control mode	Control method	Repeat, Increase	Set CAM control method
	Point unit	No. of pulse per 1 rotation	Set the resolution ability of CAM data
CAM block data	Starting position of main axis	Depending on Unit	Set the CAM position of sub axis corresponding to main axis
	Ending position of main axis		
	Starting position of sub axis		
	Ending position of sub axis		
	CAM curve	Straight Line ~ 7th curve	Set the curve of each CAM data step

(a) Main/Sub parameter setting

1) Unit

Set the control unit of main/sub axis. Set the same as the value already set on “Unit” of basic parameter.

Item	Setting Range	Remarks
Unit of main axis	pulse, mm, inch, degree	-
Unit of sub axis	pulse, mm, inch	Degree may not be used.

2) Transfer distance per 1 rotation

Set the transfer distance per 1 rotation of main/sub axis. The unit of transfer distance is according to 1).

If the unit is “mm” or “inch”, this value is the maximum last position of main/sub axis.

Transfer distance per 1 rotation is depending on unit.

■ Setting range for transfer distance per 1 rotation

Unit	Setting Range	Remarks
pulse	-	No need to set
mm	0.1 ~ 20000000.0 um	The maximum last position of main/sub axis
inch	0.00001 ~ 2000.00000 inch	The maximum last position of main/sub axis
degree	360.00000 Fixation	No need to set The maximum last position of main/sub axis

3) No. of pulse per 1 rotation

Set the no. of pulse per 1rotation of main/sub axis.

If the unit is “pulse”, the value is the maximum last position of main/sub axis.

(b) CAM control mode setting

1) Control method

Set the form of CAM repeat pattern. “Repeat mode” and “Increase mode” may be set.

▪ Repeat (Two-way mode)

Execute round-trip motion repeatedly in the range already set from starting position of sub axis to ending position according to the position of main axis in 1 rotation.

When CAM data is created in repeat, the ending position of the last step of sub axis user last set must be set as 0.

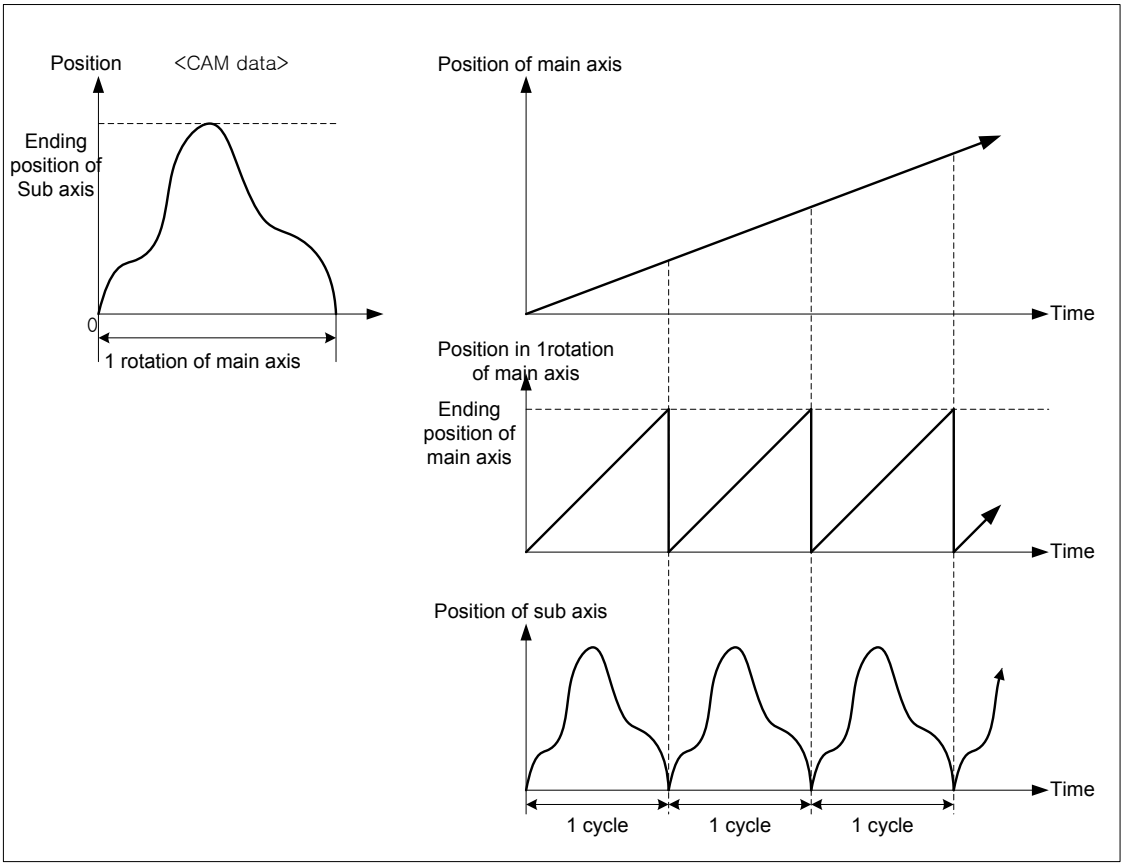

▪ Increase (Feed mode)

Execute CAM operation from starting position of sub axis to ending position according to the position in 1rotation of main axis.

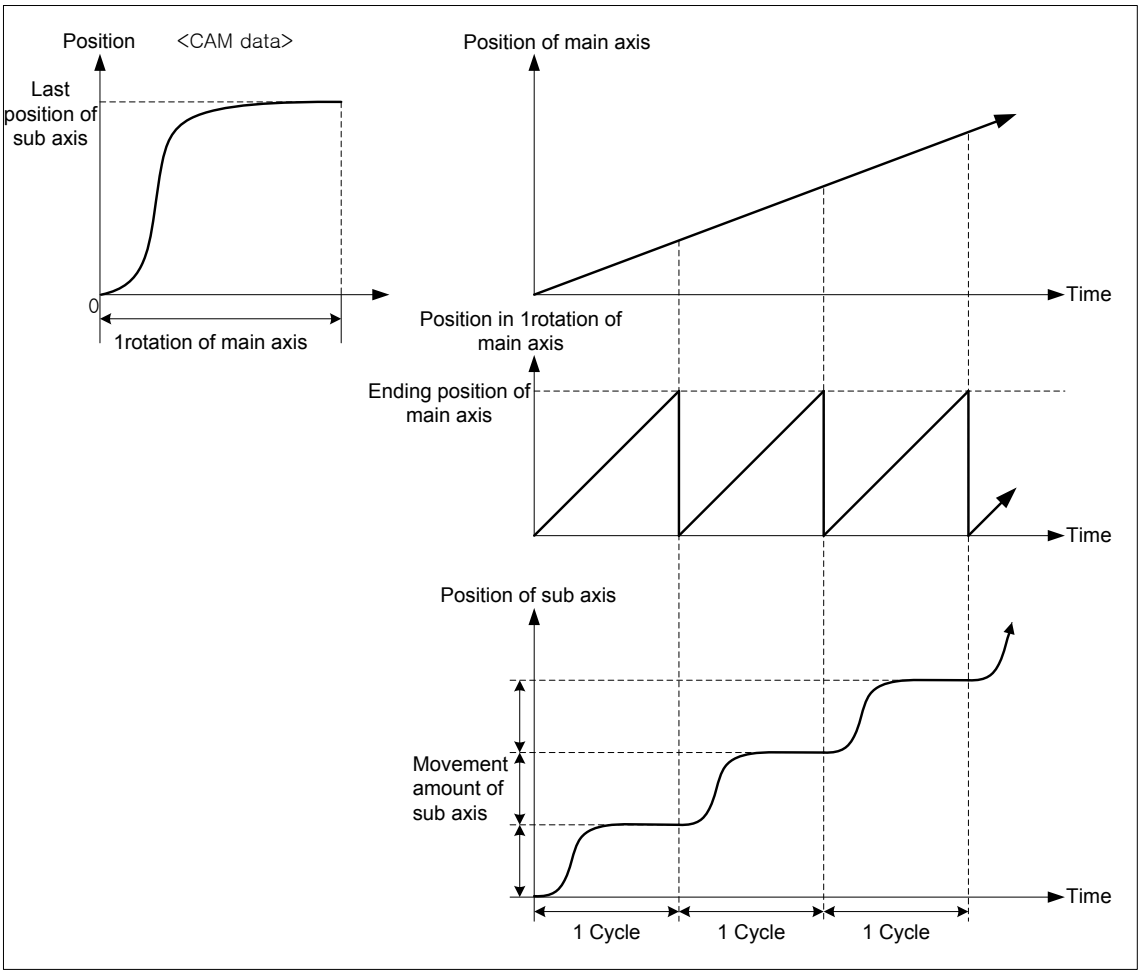

2) Point unit

Set the resolution ranging from starting position of main axis to ending position of main axis on each step data of CAM block data setting. When CAM data is created, calculate the position of sub axis corresponding to the position of main axis from the starting position of main axis by point unit. The smaller point unit is, the more no. of CAM data is, so you may execute much smoother CAM operation. However, if point unit is small, no. of CAM data exceeds 2048, so there is a chance that user can not create CAM data.

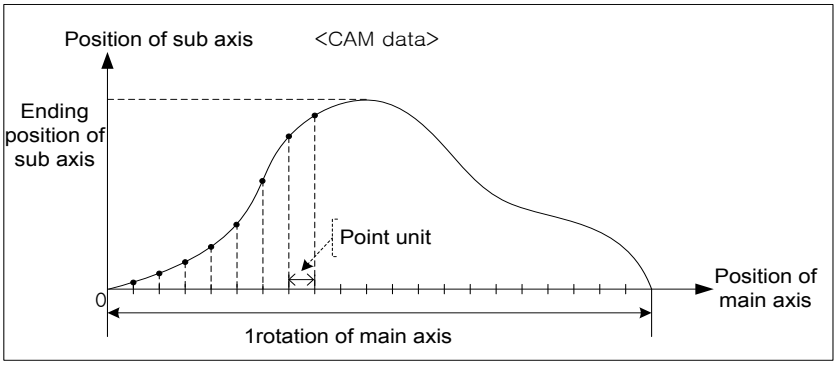

Note

When set CAM block data after point unit setting, “Ending position of main axis” must be set as positive multiple number of point unit. For example, if the unit of main axis is “degree” and point unit is 10, “Ending position of main axis” must be set as multiple number of 10 like 40, 90, 180, ···.

(c) CAM block data setting

20 data sections may be set in a CAM block and every section may have specific curve.

1) Starting position of main axis

Set the starting position of main axis in designated section. Starting position of main axis is the same as the ending position of main axis in previous section.

2) Ending position of main axis

Set ending position of main axis in designated section. The ending position of main axis in the last section must be set as much as the transfer distance per 1rotation set on main/sub axis parameter.

3) Starting position of sub axis

Set the starting position of sub axis corresponding to the starting position of main axis in the designated section. Starting position of sub axis is the same as the ending position of sub axis in previous section.

4) Ending position of sub axis

Set ending position of sub axis corresponding to the ending position of main axis in the designated section. If control method is “Repeat (Two-way mode), the ending position of sub axis in the last section must be 0. If control method is “Increase(Feed mode)”, the ending position of sub axis in the last section generally has to be set as much as the transfer distance per 1rotation set on main/sub axis parameter.

5) CAM curve

Set CAM specific curve to create data ranging from starting position of sub axis to ending position of sub axis in the designated section. The position of sub axis is calculated by characteristic of selected CAM curve, the position of main axis increase by point unit at the same time.

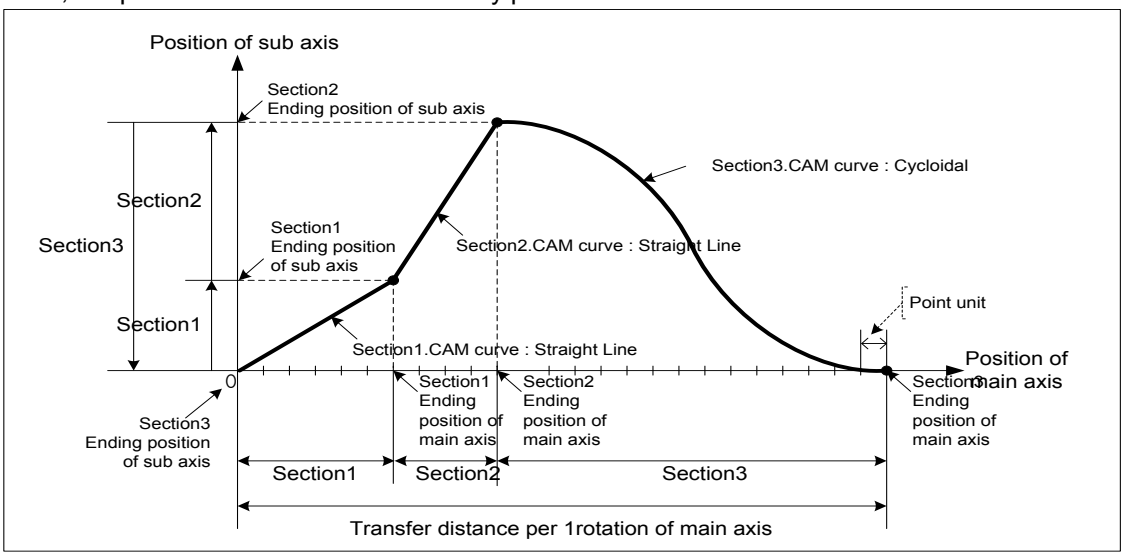

There are 22 kinds of CAM curve.
Describe characteristic of each CAM curve on next page.

■ Characteristic of CAM curve

Name	Acc. type	Position (S_{max})	Speed (V_{max})	Acc. (A_{max})	Jerk (J_{max})
Straight Line	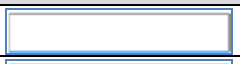	1.00000	0.00000	0.00000	0.00000
Constant Acceleration		1.00000	2.00000	4.00000	0.00000
Simple Harmonic		1.00000	1.57076	4.93409	2.46735
No-Dwell Simple Harmonic		1.00000	1.57076	4.93409	2.46735
Double Harmonic		1.00000	2.04047	5.55125	0.10285
Reverse Double Harmonic		1.00000	2.04048	9.86605	4.93455
No-Dwell Modified Constant Velocity	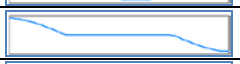	1.00000	1.22203	7.67383	3.83881
Modified Constant Velocity	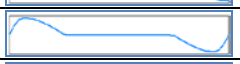	1.00000	1.27526	8.00947	0.98712
No-Dwell Modified Trapezoid		1.00000	1.71788	4.19885	2.09942
One-Dwell Modified Trapezoid	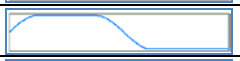	1.00000	1.91589	4.43866	55.77788
Modified Trapezoid	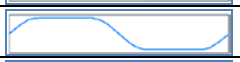	1.00000	1.99975	4.88812	0.30562
Asymmetrical Modified Trapezoid	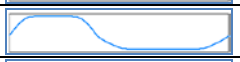	1.00000	1.99982	6.11015	0.47620
One-Dwell Cycloidal	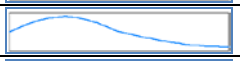	1.00000	1.75953	5.52756	0.17345
Cycloidal		1.00000	1.99985	6.28273	0.19715
Asymmetrical Cycloidal	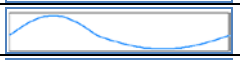	1.00000	1.99989	7.85304	0.30783
One-Dwell Trapecloid		1.00000	1.73636	4.91007	0.30699
Reverse Trapecloid	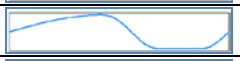	1.00000	2.18193	6.16975	0.38579
Trapecloid	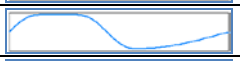	1.00000	2.18193	6.17044	0.38579
One-Dwell Modified Sine		1.00000	1.65978	5.21368	0.32603
Modified Sine		1.00000	1.75953	5.52697	0.34562
5th Curve		1.00000	1.87500	5.77350	60.00000
7th Curve		1.00000	2.18750	7.51283	41.99646

(3) Principle of CAM operation

(a) When CAM operation command is executed, the current position of main axis is recognized as 0.

(b) When the main axis starts operating, “the current position in 1rotation of main axis” increase to “no. of pulse per 1rotation (-1)” then become 0. The position value (0~“no. of pulse per 1rotation (-1)”) is repeated.

(c) Calculate CAM data step no. corresponding to “the current position per 1rotation” with “point unit” of CAM parameter.

$$\text{Cam Data Step no.} = \frac{\text{Current Positio per 1rotation of Main Axis}}{\text{Point Unit}}$$

For example, if the position of main axis at the beginning of CAM operation is 1000, the current position is 1073 and point unit is 10, the step no. of CAM data is as follows.

$$\text{Cam Data Step no.} = \frac{\text{Current Positio per 1rotation of Main Axis}}{\text{Point Unit}}$$

$$= \frac{1073 - 1000}{10}$$

$$= 7.3$$

(d) Calculate update position of sub axis with CAM data step. If main axis is forward direction, calculate the position of sub axis with the position corresponding to “the part of positive number of CAM data step no.” and the position corresponding to “the part of positive number of CAM data step no. +1”.

Position of sub axis
= {(Step position of CAM data +1) – (Step position of CAM data)} x Decimal part of CAM data step no.
+ (Step position of CAM data)

For example, if position value of sub axis of step 7 is 395 and step 8’s is 475, the position of sub axis is as follows.

$$\text{Position of sub axis} = 395 + (475 - 395) \times 0.3$$

$$= 395 + 24$$

$$= 419$$

(4) Operation timing

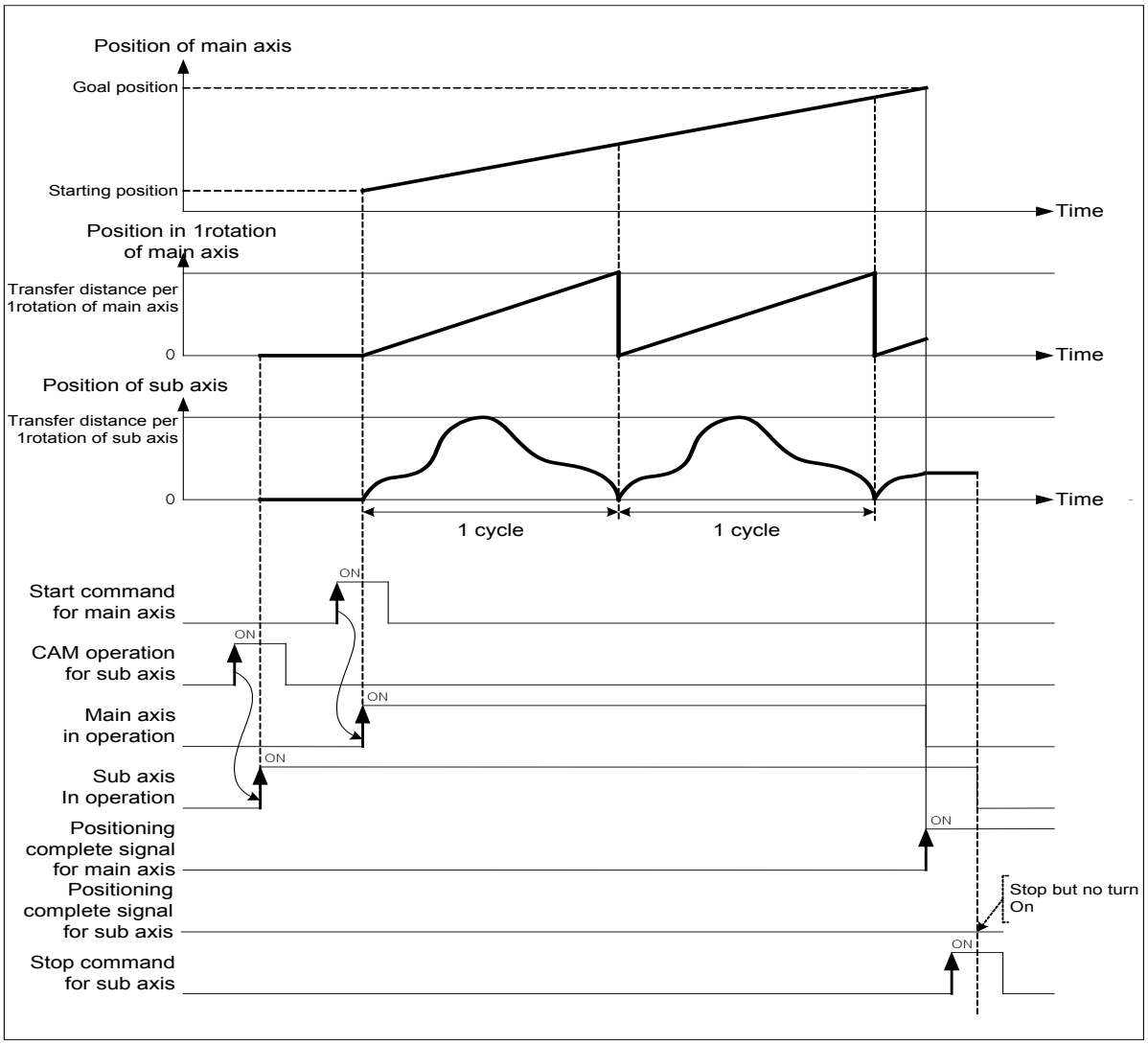

(5) Restrictions

CAM operation command may not be executed in the cases below.

(a) If execute CAM operation command in being On of M code, error (code:702) arises. Make M code “OFF” with “M code release (XMOF)” command before use.

(b) If the current main axis is not the axis can be set on the current module or main axis and command axis are the same axis, error (code:704) arises. Set the main axis among one of the axis can be set on module.

(c) If speed of main axis is too fast and speed of sub axis exceeds speed limit, error (code:708) arises. In this case, you have to lower the operation speed.

9.4.4 User CAM Operation

User CAM operation, like CAM operation, executes CAM axis control in which CAM data shown as CAM curve synchronize with position of the motor set as main-axis. The difference with CAM operation is that user sets up CAM data not in XG-PM but in PLC program (XG5000), and the number of CAM data is 30.

1) Operation

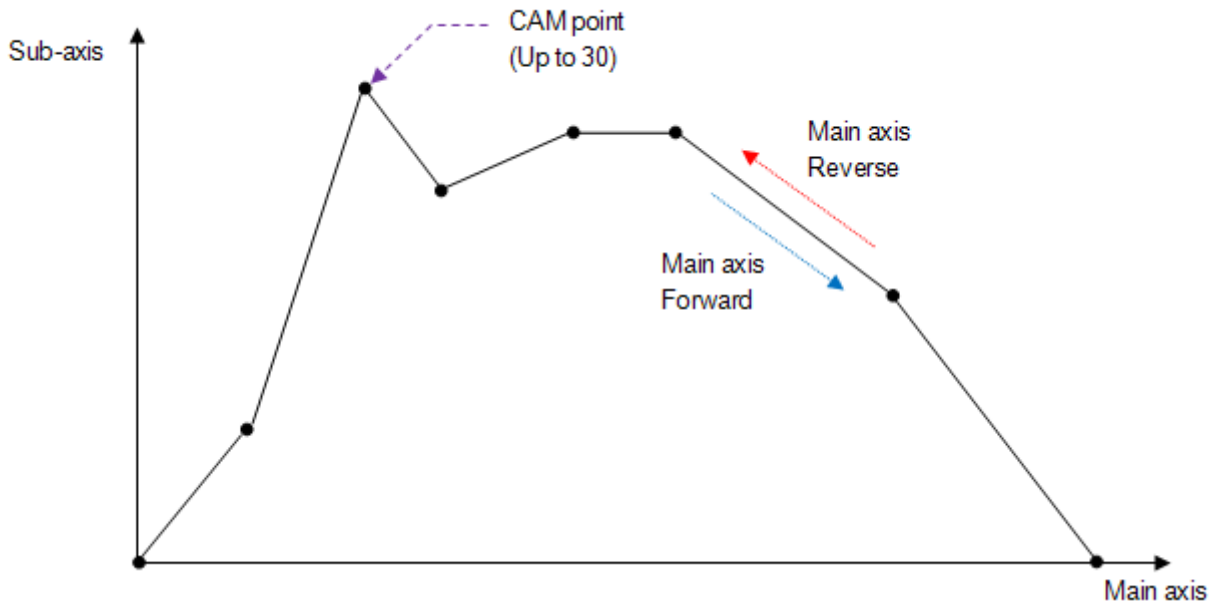

Like figure above, you can set up maximum 30 CAM data points, and it operates CAM curve between CAM points with straight line. CAM point data is set up at sub-axis and as type of (main-axis position, sub-axis position). CAM data point can be saved at the specified memory address of each axis by using " Write Variable Data" (XVWR, XPM_VWR) command. For memory address to save CAM data point of each axis, refer to appendix 2.11 User CAM data memory address.

Note

Change of User CAM data is available to be executed when the User CAM is operating. The changed User CAM data is applied after the one cycle completed. This function may be used in application that need to change CAM pattern without stop of User CAM operation.

9.5 Modification Function of Control

9.5.1 Floating Origin Setting

This is used to force to set the current position as the origin without carrying out the homing action of the machine.

(1) Characteristic of Control

(a) Modify the current position into “Homing end position” of homing parameter and become Origin-decided status.

(b) After floating origin setting command is executed, the current position is changed to “The position of homing completion” of homing parameter.

(c) Related parameter (Homing Parameter)

Items	Setting value	Description
Position of homing completion	-2147483648 ~ 2147483647	Set the position after homing completion or floating origin setting

Note

Floating origin setting just executes forced origin-decision from the current position to origin completion position. So user need to take notice as follows.
(1) When error arose, clear the cause of error and reset,
(2) set floating origin again,
(3) change the operation step no. to operate with start step no. change command and then execute.

(2) Operation timing

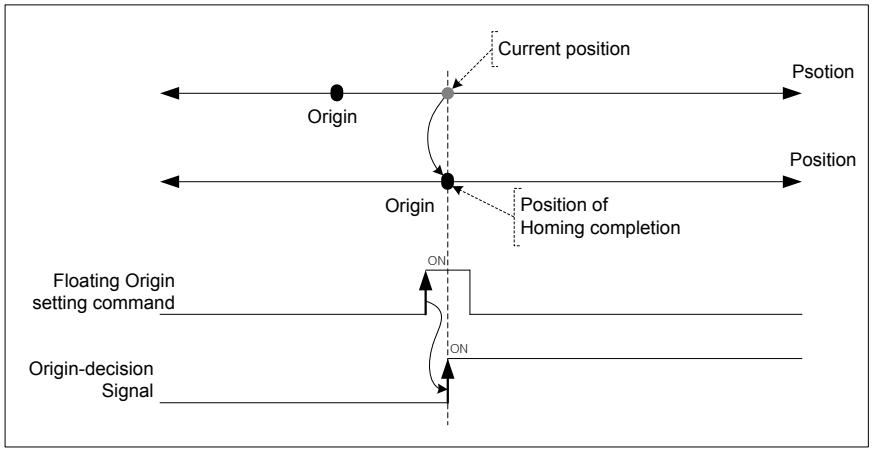

(3) Restrictions

If drive ready signal is in “OFF”, floating origin setting command is not executed but error (code:212)arises. When drive ready signal is in “ON”, execute floating origin setting command.

9.5.2. Continuous Operation

Execute positioning control changing the current operation step no. to the next one.

(1) Characteristics of Control

(a) When continuous operation command is executed, operating speed is changed into the speed of next operation step directly.

(b) This command may be used in End, Go on, Continuous mode and used at Acc.,Dec.,Steady speed section.

(c) If continuous operation command is executed in operation, the current operation step no. is changed to the next step no. and keep operating.

(d) There are differences of operation depending on between absolute coordinates and relative coordinates.

(2) Operation timing

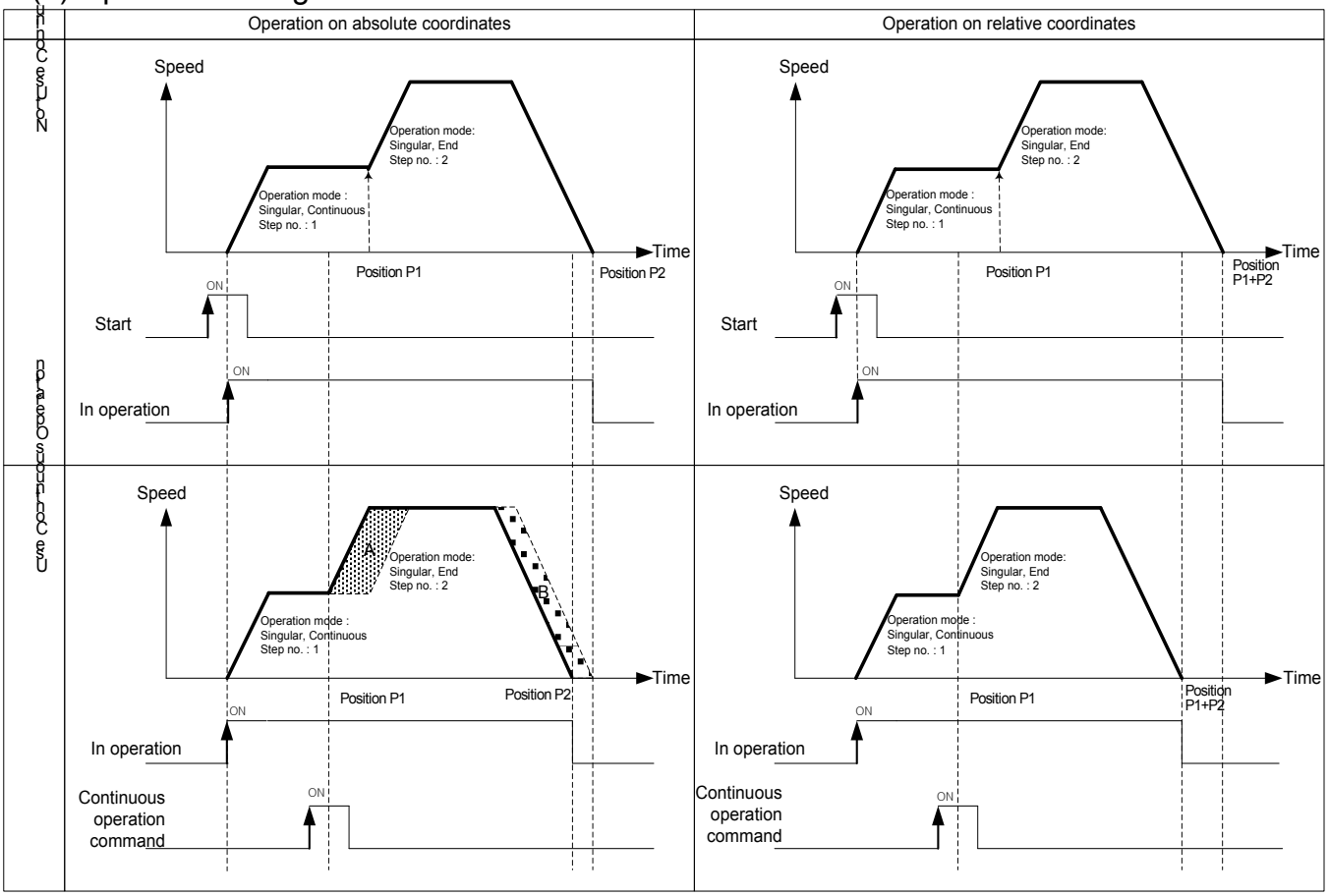

■ The goal positions of continuous operation on absolute coordinates are same, so the goal position is the same as the position before and after continuous operation. Therefore, the current position positioned by continuous operation is P2. (A area and B area both are same size)

■ When continuous operation is executed on relative coordinates, the movement amount between current position and goal position is the real goal position. Therefore, the goal position is different from the one without continuous operation. The position positioned by continuous operation is P1 + P2.

(3) Restrictions

In the cases below, continuous operation is not executed and previous operation is being kept.

(a) Acc./Dec. pattern of extended parameter is “S-curve operation”. (error code : 390)

(b) It is in dwell. (error code : 392)

(c) The current control is not shortcut position control or linear interpolation. (error code : 393)

(d) Speed data value of operation step to be executed next is 0 or exceeds the speed limit. (error code : 394)

(e) Execute continuous operation command on sub axis. (error code : 395)

User has to execute continuous operation command on main axis in linear interpolation.

(f) Execute continuous operation command on axis in circular interpolation. (error code : 396)

(g) Execute continuous operation on sub axis in sync. operation. (error code : 397)

(h) The current operation step no. is the last step(400) of operation data. (error code : 399)

(i) The current axis in operation is executed by direct start command. (error code : 400)

[Example] Execute continuous operation on axis1 operating by absolute, shortcut position control

■ Current position of Axis1 : 0

■ Setting example in XG-PM

▪ Operation data of axis1

Step no.	Control method	Operation	Goal position [pls]	Operation speed [pls/s]	Acc. no.	Dec. no.	M code	Dwell time
1	Absolute, shortcut position control	Singular, end	1000	1000	No.1	No.1	0	0
2	Absolute, shortcut position control	Singular, end	5000	2000	No.1	No.1	0	0

■ Operation pattern

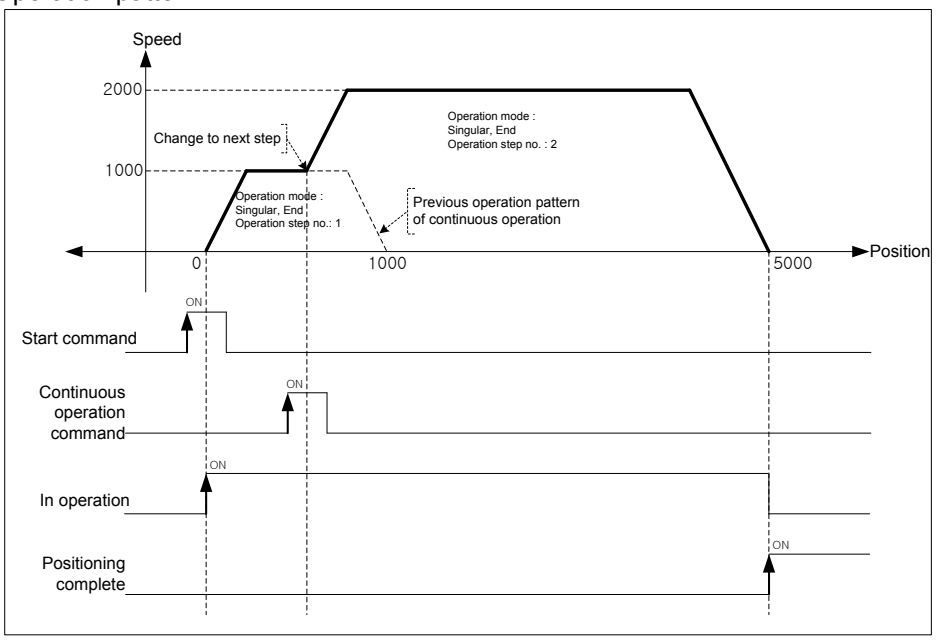

9.5.3 Skip Operation

Decelerate and stop the current operation step and change to the operation data of next operation step no., then execute positioning control.

(1) Characteristics of Control

(a) SKIP operation command stops the operation and carries out the operation of next step after executing the command other than Continuous operation command (Next Move).

(b) This is used in case that the operation mode is End, Go-on, Continuous and the operation pattern is in Acceleration, Constant speed, Deceleration section.

(c) If SKIP operation command is executed in the status that the operation data of next step is not yet set, Error 151 will occur.

(d) When set position data, there would be differences on skip operation command depending on absolute coordinates and relative coordinates,

(2) Operation timing

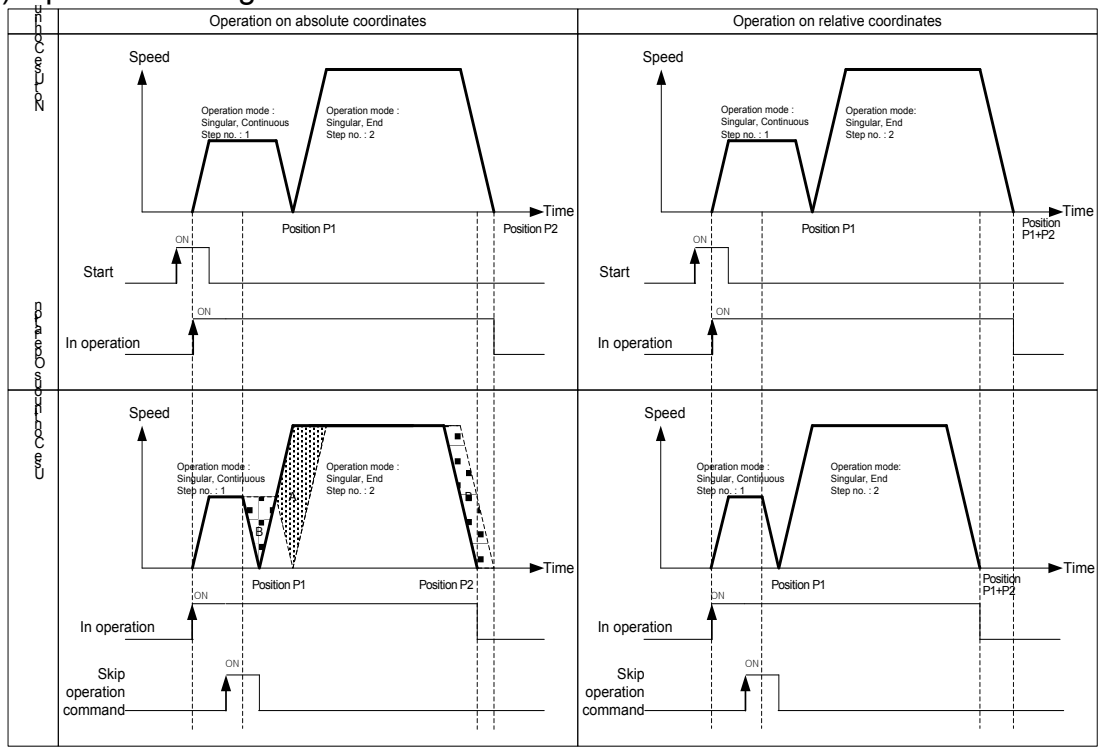

■ The goal position of next operation step after skip operation command is executed on absolute coordinates is the same as the case did not execute skip operation. Therefore, current position positioned by skip operation is P2. (A area and B area both are same size)

■ When skip operation is executed on relative coordinates, the movement amount between current position and goal position is the real goal position. Therefore, the goal position is different from the one without continuous operation. The position positioned by skip operation is P1 + P2.

(3) Restrictions

In the cases below, skip operation is not executed and previous operation is being kept.

(a) Execute skip operation command on the sub axis of linear interpolation. (error code:332)
Skip operation in linear interpolation operation must be executed on main axis.

(b) Execute skip operation command on the sub axis of sync. operation. (error code:333)

(c) Execute skip operation command on the axis in Jog operation. (error code:335)

(d) The current axis is executed by direct start. (error code:336)

(e) Execute skip operation on the axis in Inching operation. (error code:337)

(f) Execute skip operation on the sub axis of circular interpolation. (error code:338)
Skip operation in circular interpolation operation must be executed on main axis.

[Example] Execute skip operation command on axis1 operating by absolute and shortcut position control.

■ Current position of axis1 : 0

■ Setting example in XG-PM

▪ Operation data of axis1

Step no.	Control method	Operation method	Goal position [pls]	Operating speed [pls/s]	Acc.no.	Dec.no.	M code	Dwell time
1	Absolute, Shortcut position control	Singular,End	1000	1000	No.1	No.1	0	0
2	Absolute, Shortcut position control	Singular,End	5000	2000	No.1	No.1	0	0

■ Operation pattern

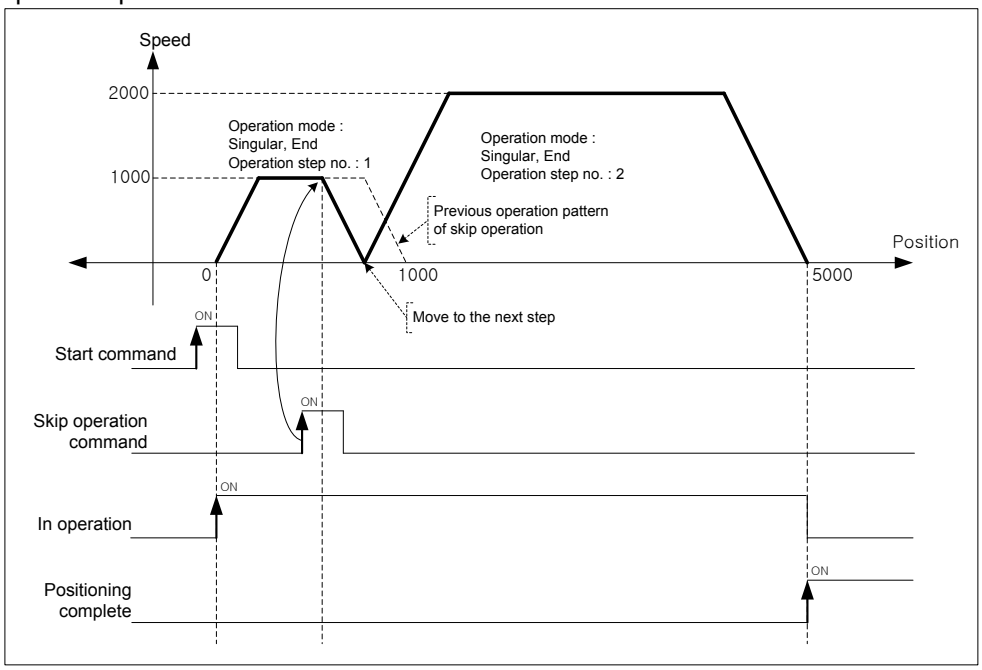

9.5.4 Position Override

This is used to change the goal position during positioning operation by positioning data.

(1) Characteristics of Control

(a) Position override command is used in the operation pattern (Acceleration, Constant speed, Deceleration section) and the available operation mode is End operation, Go-on operation, Continuous operation.

(b) Position setting range is –2147483648 ~ 2147483647 Pulse.

(c) As the operation is different according to Position Override command during operation, cares should be taken in using.

In other words, if position of position override at the moment of commanding position override is bigger than the position it stopped at, the positioning direction would be forward. If it is smaller, the direction would be reverse.

(d) This command may be executed several times in operation.

(2) Operation timing

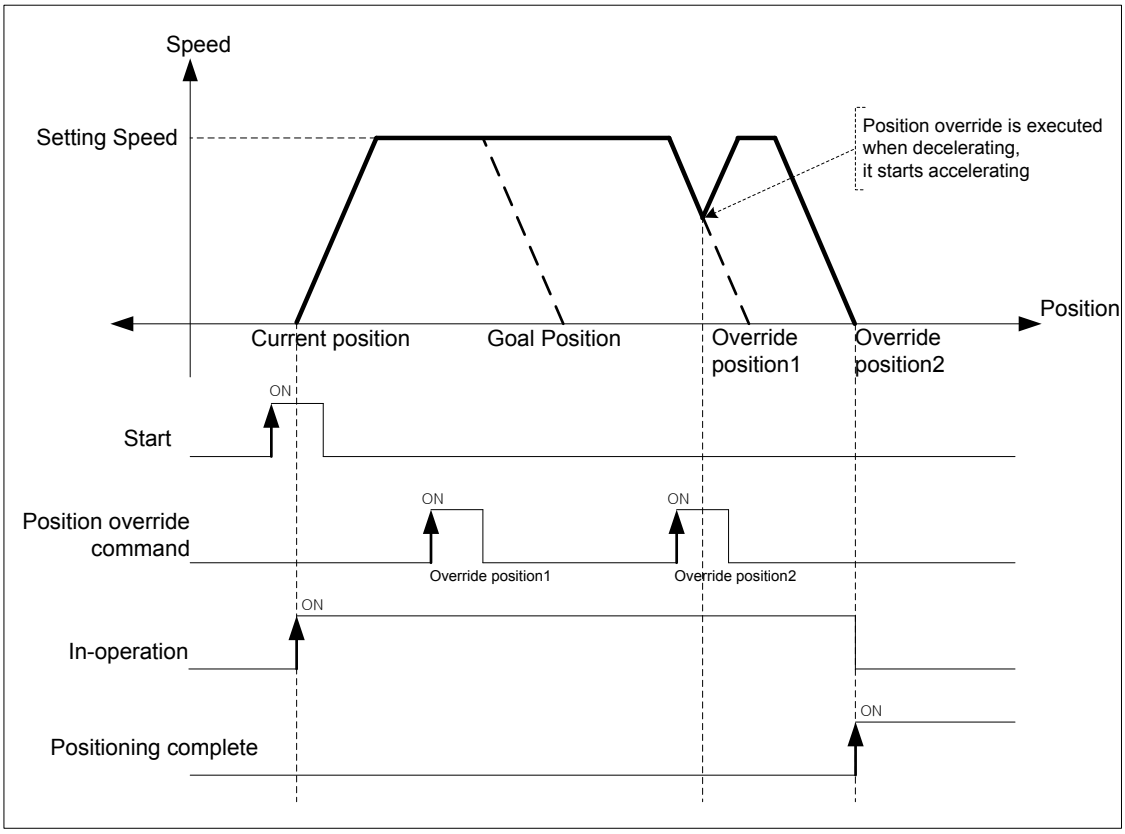

If position override is executed in operation, the goal position is changed to override position1 and keep operating. If position override for override position2 is executed at dec. area, positioning is finished by acc. speed already set at override position2.

■ The case that override position is smaller than decelerating stop position.

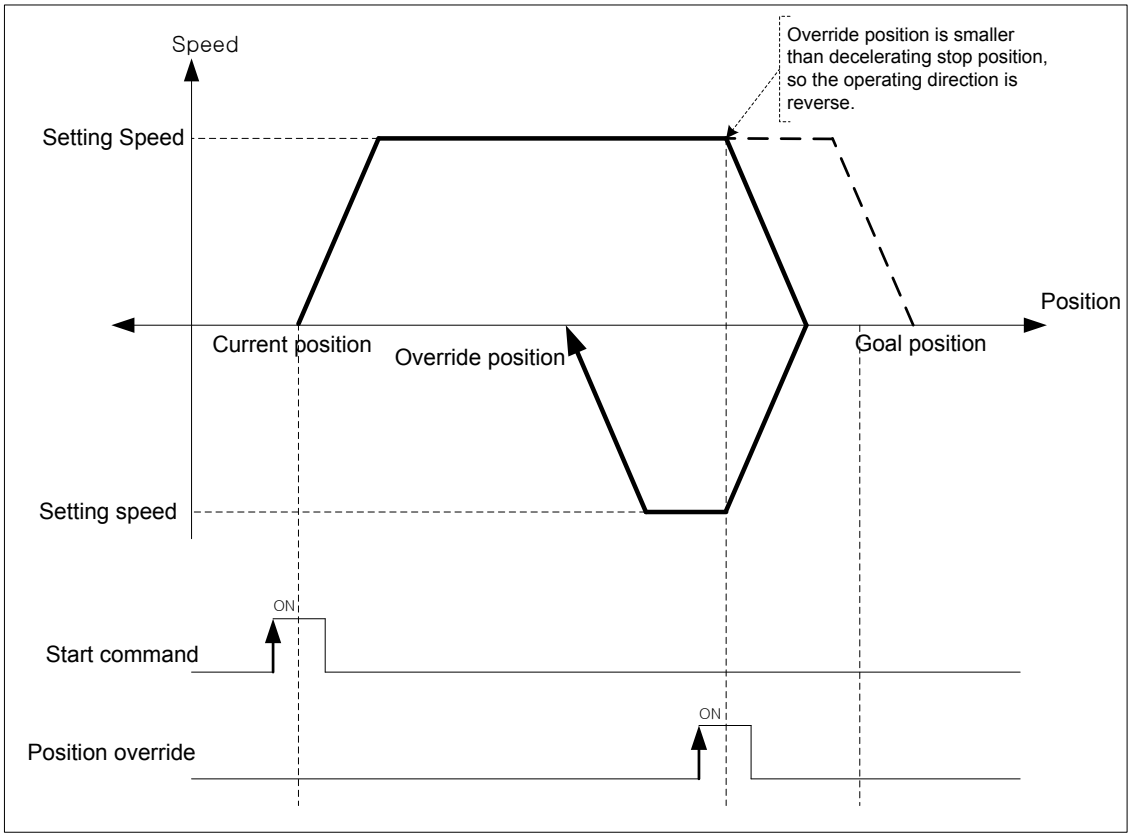

(3) Restrictions

In the cases below, position override is not executed and previous operation is being kept.

(a) Execute position override in dwell. (error code:362)

(b) Current operation is not positioning control(shortcut positioning, Inching operation). (error code:363)

(c) Execute position override on the axis operating linear interpolation. (error code:364)

(d) Execute position override on the axis operating circular interpolation. (error code:365)

(e) Execute position override on the sub axis of sync. operation. (error code:366)

[Example] Execute position override on axis1 operating by absolute, shortcut positon control.

■ Current position of axis1 : 0

■ Setting example in XG-PM

▪ Operation data of axis1

Step no.	Control method	Operation method	Goal position [pls]	Operation speed [pls/s]	Acc.no.	Dec.no.	M code	Dwell time
1	Absolute single axis position control	Singular, End	1000	1000	No.1	No.1	0	0
2	Absolute single axis position control	Singular, End	5000	2000	No.1	No.1	0	0

■ Operation pattern

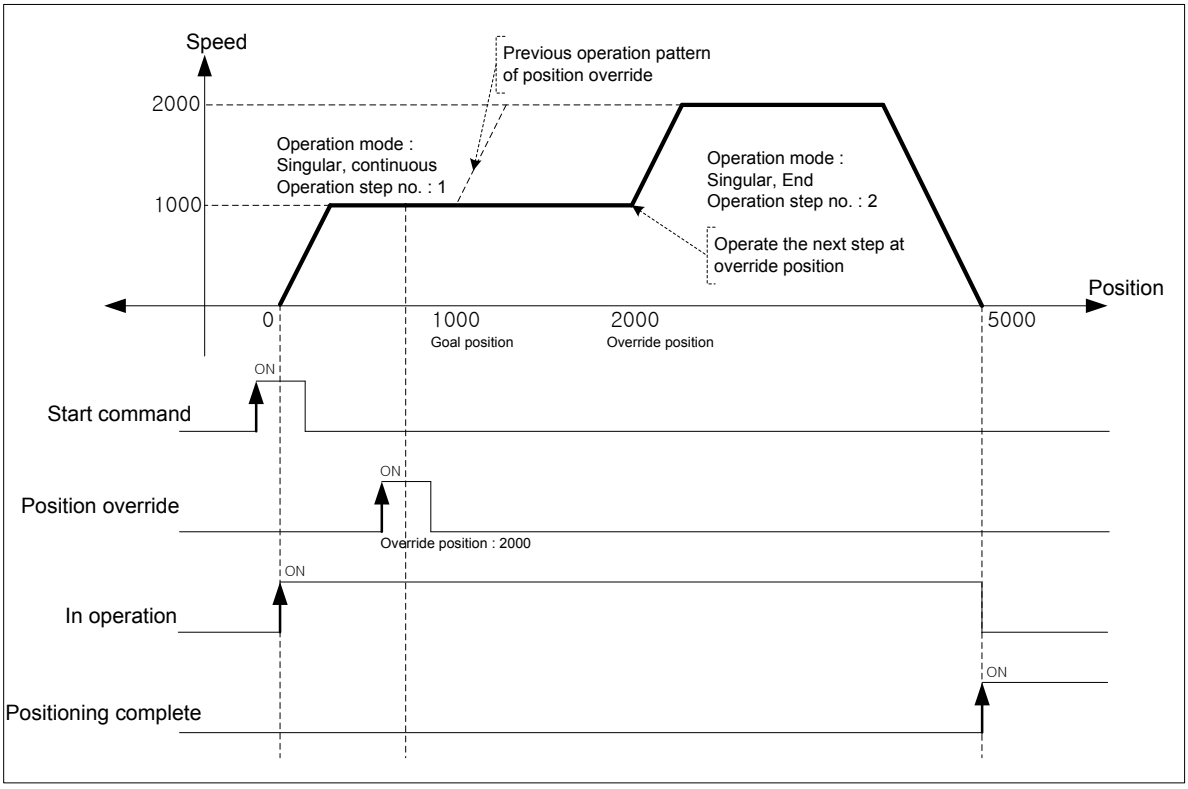

Note

If operation pattern is “continuous” and override position is bigger than goal position, keep operating at current speed then continue to operate the next step. If override position is smaller than goal position, execute decelerating stop and position in reverse direction, then continue to operate the next step.

9.5.5 Speed Override

When user wants to change the operation speed of positioning control, user may change the speed with speed override command.

(1) Characteristics of Control

(a) Speed override command is available in acc./steady speed area and available operation modes are “end”, “go on” and “continuous”.

(b) It may be executed several times in operation.

(c) User may set speed override value as “%setting” or “speed setting” on [Speed override] of common parameter.

(d) Related parameter setting (common parameter)

Items	Setting value	Description
Speed override	0 : %setting	Set the speed override setting value by %
	1 : speed setting	Set the speed override setting value with exact number

(e) Auxiliary data of speed override command setting

Items	Setting value	Description
Speed	1 ~ 65535 (1=0.01%)	Set the speed override setting value with percentage (If it is 100%, set 10000)
	1 ~ Speed limit	Set the speed override setting value directly

(2) Operation timing

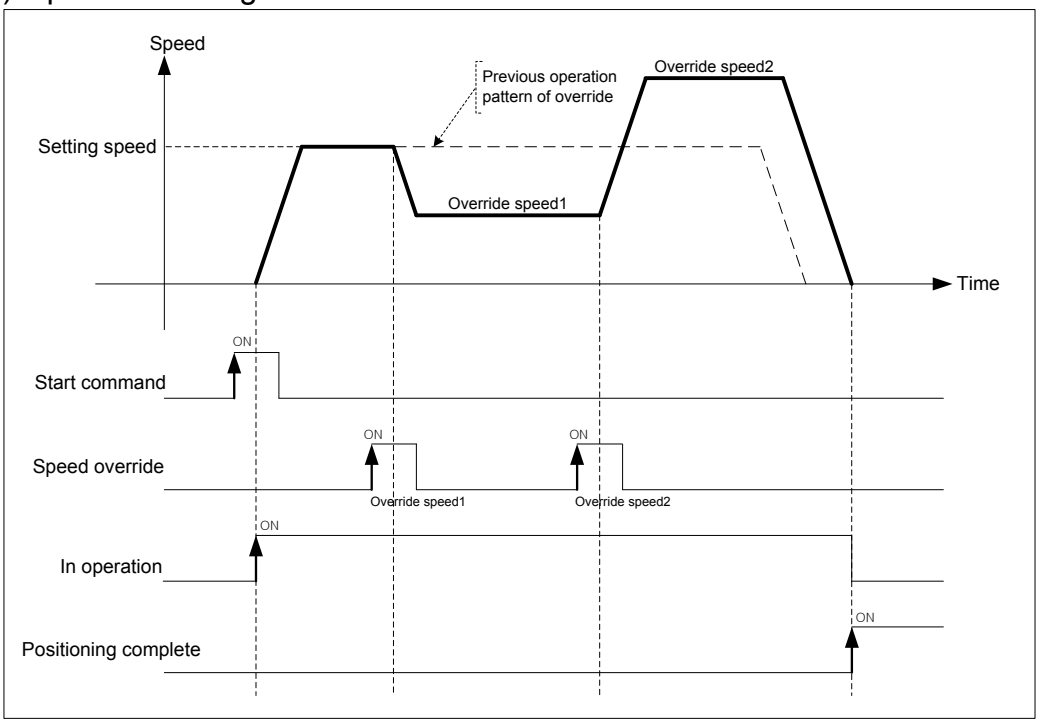

(3) Restrictions

In the cases below, speed override is not executed and previous operation is being kept.

(a) Value of speed override exceeds speed limit of basic parameter. (error code:372)

Speed value of Speed override must be below speed limit.

Override speed of linear interpolation for each axis need to be below speed limit.

(b) Execute speed override on the sub axis of linear interpolation. (error code:373)

In linear interpolation, speed override must be executed on main axis.

(c) Execute speed override on the sub axis of circular interpolation. (error code:374)

In circular interpolation, speed override must be executed on main axis.'

(d) Execute speed override on sub axis of sync. operation. (error code:375)

(e) Execute speed override in dec. area. (error code:377)

(f) In the case that acc./dec. pattern of extended parameter is "S-curve operation". (error code:378)

[Example] Execute speed override(50%→100%→200%→150%) on axis1 operating by absolute, shortcut position control.

■ Current position of axis1 : 0
"Speed override" of common parameter : Set %
"Speed limit" of basic parameter : 3000 [pls/s]

■ Setting example of XG-PM
▪ Operation data of axis1

Step no.	Control method	Operation method	Goal position [pls]	Operation speed [pls/s]	Acc.no.	Dec.no.	M code	Dwell time
1	Absolute, shortcut position control	Singular, End	1000	2000	No.1	No.1	0	0

■ Operation pattern

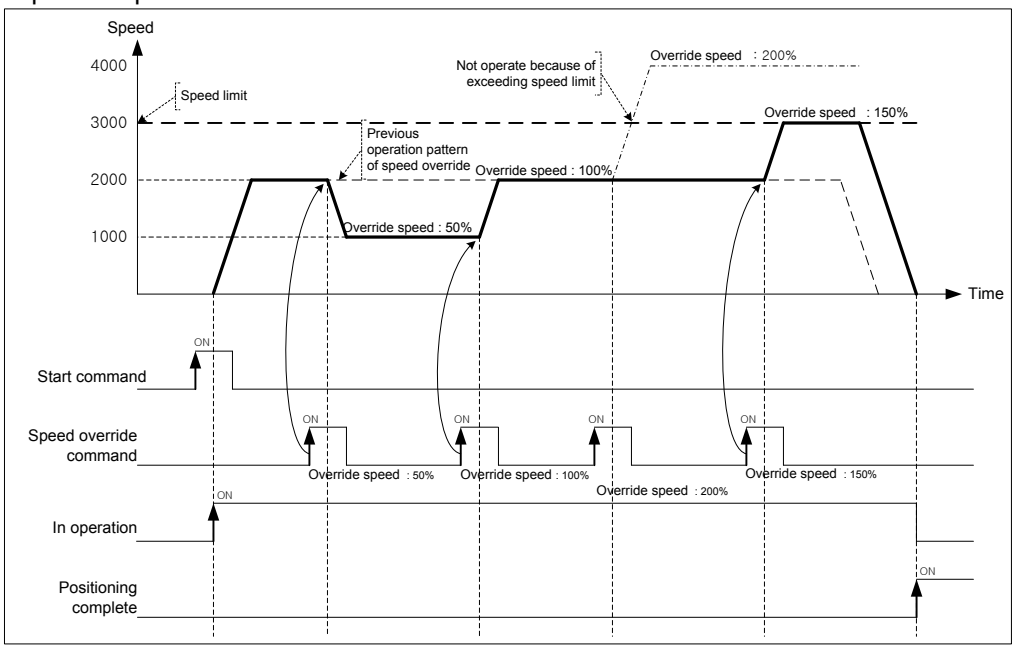

9.5.6 Positioning Speed Override

This is the command to operate by the changed operation speed if it reaches the setting position during positioning operation.

(1) Characteristics of Control

(a) This command is used only in Acceleration and Constant speed section from operation pattern and the available operation mode is End, Go-on, Continuous operation.

(b) As this command is not carried out in Deceleration section, cares should be taken in using.

(c) The position setting range is –2147483648 ~ 2147483647 Pulse.

(d) User may set speed override value as “%setting” or “speed setting” on [Speed override] of common parameter.

(e) User may select that consider the designated position value on “coordinates of positioning speed override” of extended parameter as an absolute position or a relative position.

(f) Related parameter setting

■ Common parameter

Items	Setting value	Description
Speed override	0 : Set %	Set the value of speed override by %
	1 : Set speed	Set the value of speed override with exact number

■ Extended parameter

Items	Setting value	Description
Coordinates of positioning speed override	0 : Absolute	Speed override is executed in the designated absolute position
	1 : Relative	Start speed override from the position increment added

(g) Auxiliary data setting of positioning speed override command

Items	Setting value	Description
Position	-2147483648~ 2147483647	Set the position to start speed override
Speed	1 ~ 65535 (1=0.01%)	If speed override is “%”, set the speed by % (100% is 10000)
	1 ~ Speed limit	If speed override is “Exact number”, set the speed with exact number

Note

While the current position is not exactly same as the value set on speed override, if the position of speed override is at between previous scan and current scan, speed override is executed at the speed set.

(2) Operation timing

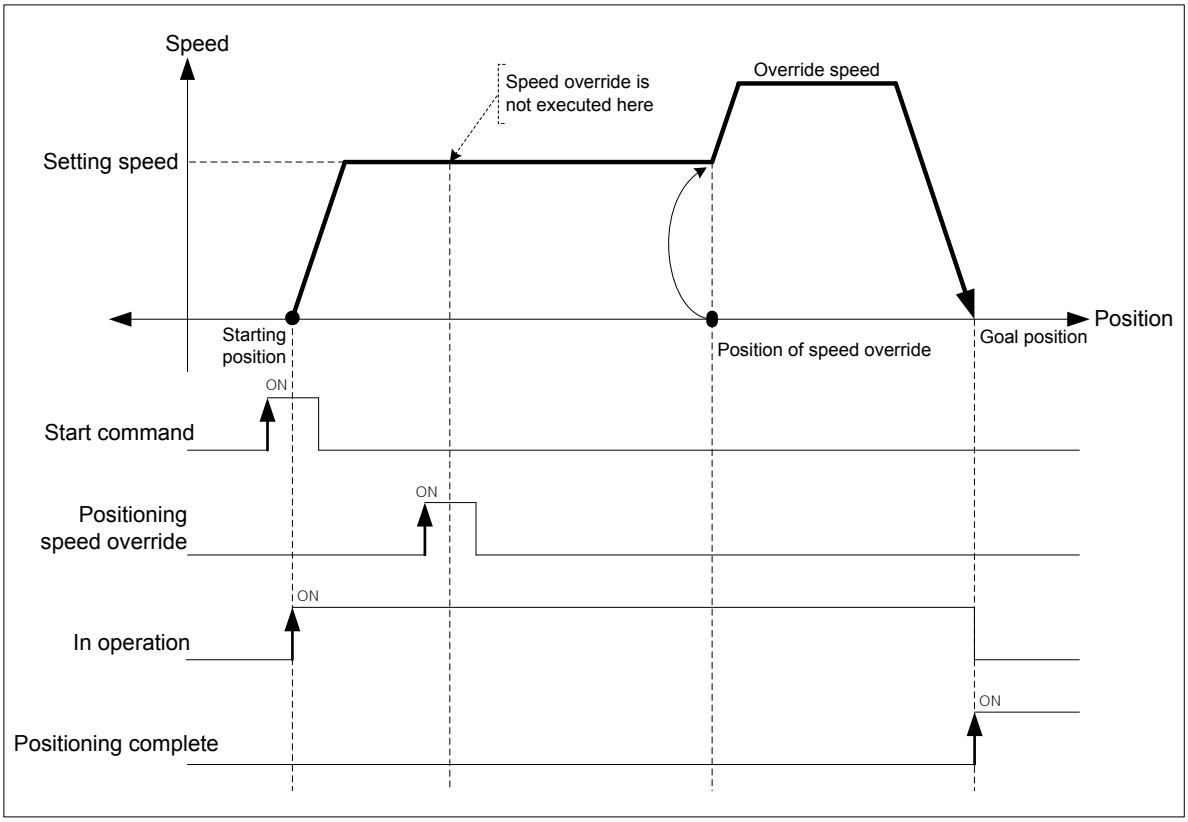

(3) Restrictions

In the cases below, positioning speed override is not executed and previous operation is being kept.

(a) Current operation is not positioning (shortcut position control, Inching operation) control. (error code:382)

(b) The value of speed override exceeds speed limit of basic parameter. (error code:383)

The speed value of speed override must be below speed limit.

Override speed of linear interpolation for each axis need to be below speed limit.

(c) Execute positioning speed override on the sub axis of linear interpolation. (error code:384)

In linear interpolation, positioning speed override must be executed on main axis.

(d) Execute speed override on the sub axis of circular interpolation. (error code:385)

In circular interpolation, positioning speed override must be executed on main axis.'

(e) Execute speed override on sub axis of sync. operation. (error code:386)

(f) In the case that acc./dec. pattern of extended parameter is "S-curve operation". (error code:389)

(g) If execute positioning speed override in dec. area., although error does not arise but speed override is not executed. However, execute positioning speed override command in non-dec. area and speed override is executed when it is decelerating, error arises. (error code:377)

[Example] Execute positioning speed override at 4000 [pls/s] at 2000(position of speed override) on axis1 operating by absolute, shortcut position control.

■ Current position of axis1 : 0
「Speed override」of common parameter : Speed setting
「Speed limit」of basic parameter : 5000 [pls/s]
「Coordinates of positioning speed override」of extended parameter : Absolute

■ Setting example in XG-PM
▪ Operation data of axis1

Step no.	Control method	Operation method	Goal position [pls]	Operation speed [pls/s]	Acc.no.	Dec.no.	M code	Dwell time
1	Absolute single axis position control	Singular, End	5000	2000	No.1	No.1	0	0

■ Operation pattern

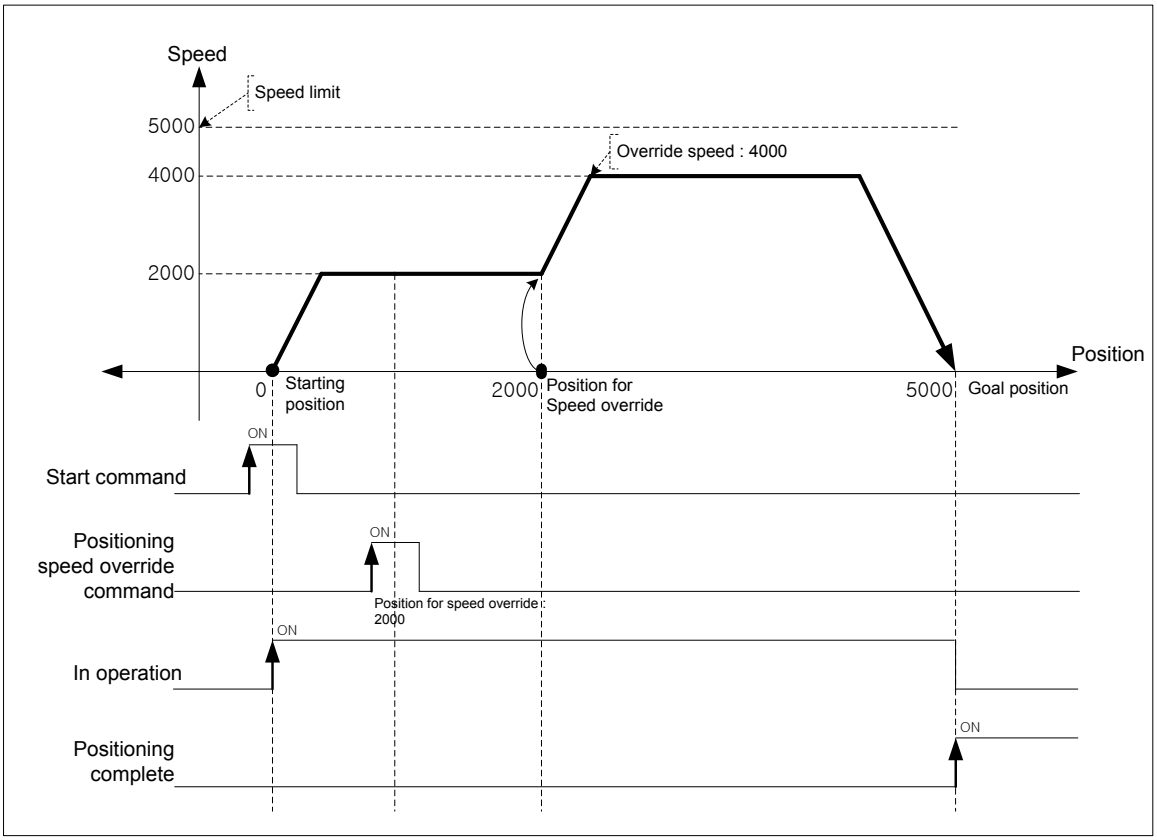

9.5.7 Current Position Preset

This command is for changing the current position value to the value at user's pleases.

(1) Characteristics of Control

(a) If user uses this command, the origin-undecided status becomes origin-decided status.

(b) When the current position is changed by position changing command, the mechanical origin position is changed. If user wants to use the mechanical origin again, has to execute homing command.

(c) The current position preset command may not be executed in operation.

(d) Auxiliary data setting of current position preset command.

Items	Setting value	Description
Position	-2147483648 ~ 2147483647	Set the position to change

(2) Operation timing

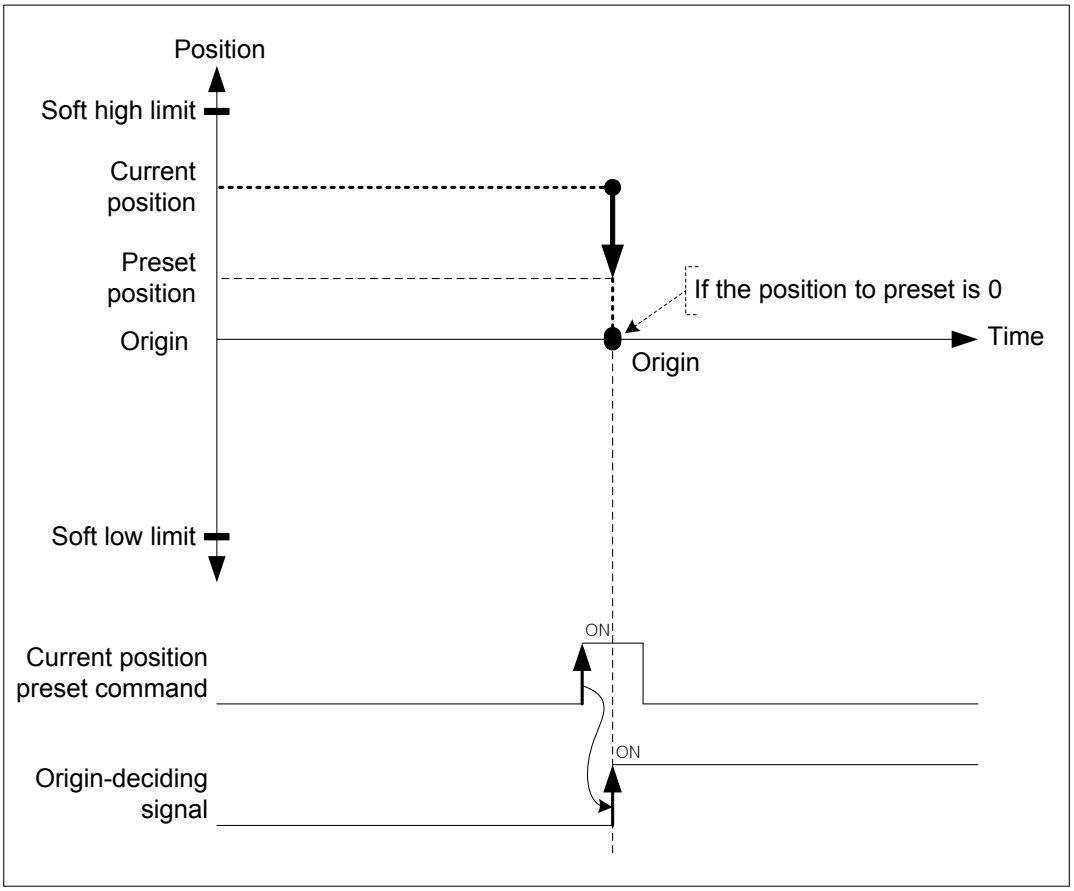

(3) Restrictions

In the cases below, current position preset is not executed and error arises.

(a) Setting value of current position preset exceeds soft high/low limit of extended parameter. (error code:452)

9.5.8 Encoder Preset

This command is for changing the value of current encoder position to the value at user's pleases.

(1) Characteristics of Control

(a) User may change the current position value.

(b) If there is an encoder being main axis, the speed of sub axis is possible to be changed dramatically, so encoder preset command may not be executed.

(c) Encoder preset command should be executed in the status that external encoder pulse input is not entered.

(d) Auxiliary data setting of encoder preset command

Items	Setting value	Description
Position	-2147483648 ~ 2147483647	Set the encoder position to change on selected encoder
Types	0 : Encoder	Select encoder to change (Must be 0)

(2) Operation timing

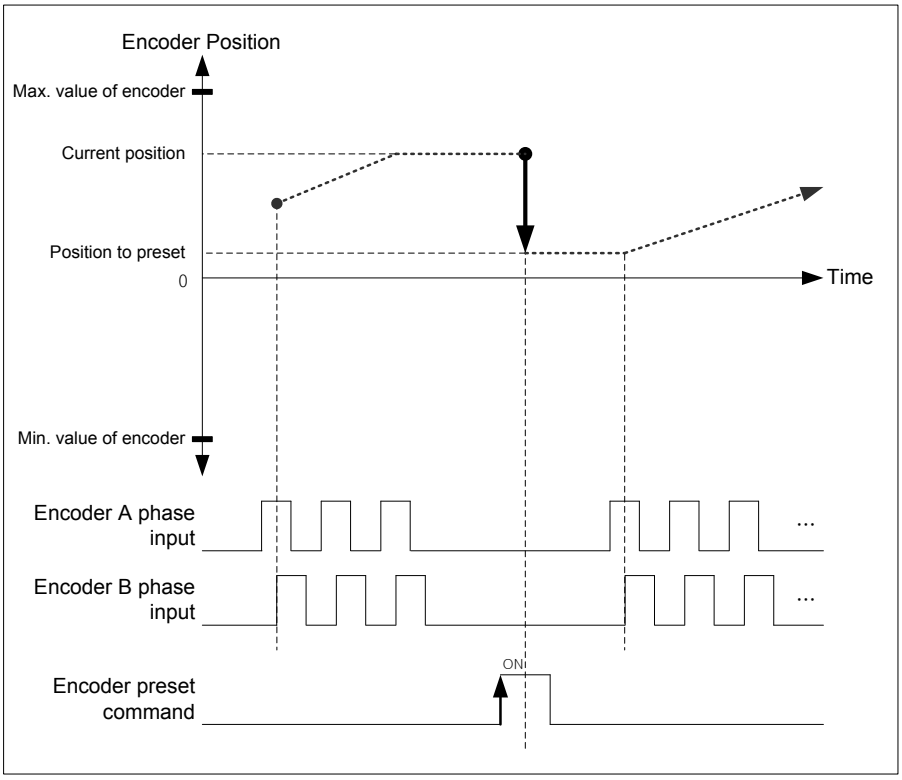

(3) Restrictions

In the cases below, encoder preset command may not be executed and error arises.

(a) There is an encoder as a main axis (error code: 532)

(b) Position value of encoder preset exceeds the max./min. value of encoder of common parameter. (error code:534)

9.5.9 Start Step no. Change

This command is for changing the current step no. when executing indirect start command.

(1) Characteristics of Control

(a) When starting with setting step no. as 0 in indirect start command, current operation step no. is executed. The current step no. may be changed by start step no. change command.

(b) This command may be only executed in stop motion or error arises.

(c) Auxiliary data setting of start step no. change command.

Items	Setting value	Description
Step	1 ~ 400	Set the step no. to change

(2) Operation timing

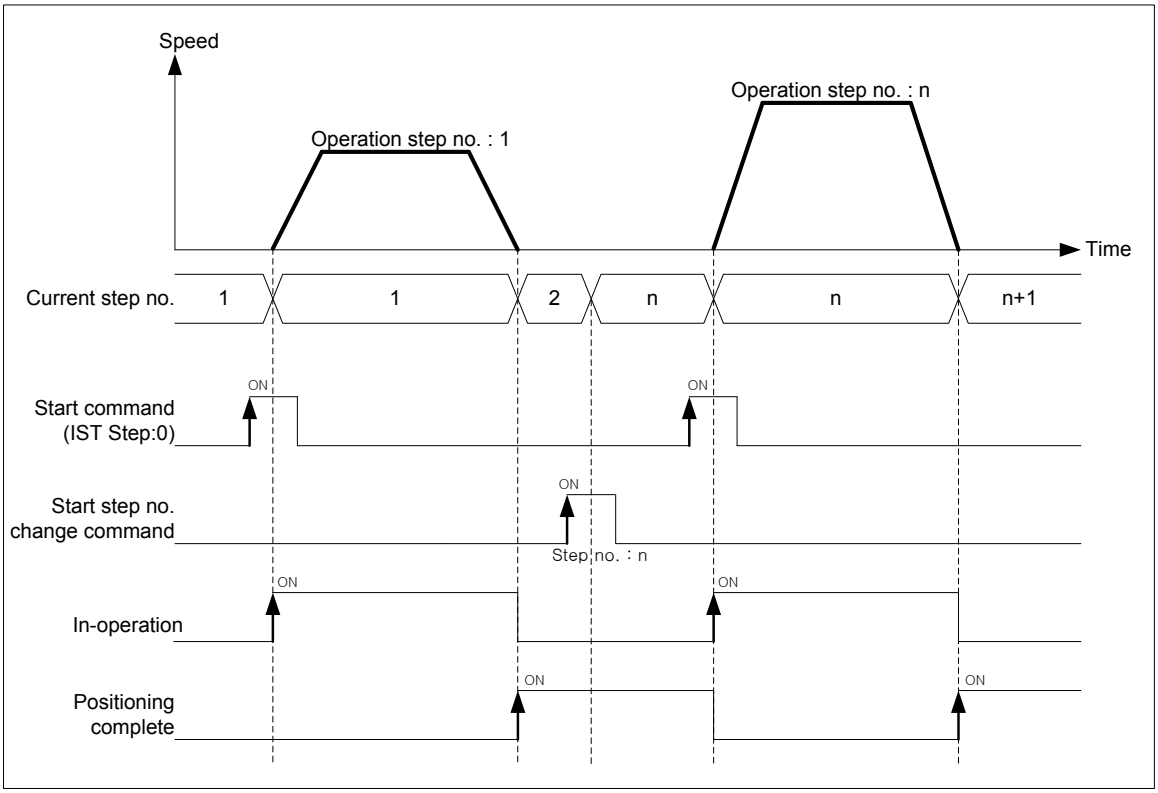

(3) Restrictions

In the case below, start step no. change command is not executed.

(a) Step no. to change is out of 0 ~ 400. (error code:442)

If step no. is 0, keep the current step no.

9.5.10 Repeat Operation Step no. Change

This command is for changing the repeat operation step no will be executed next.

(1) Characteristics of Control

(a) In case of repeat operation mode setting (End, Go-on, Continuous operation), the current operation step no. will be changed automatically to operate the step no.1 when repeat operation mode setting step completes the positioning operation but if start step no. change command is executed in repeat operation, the step no. will be changed with the assigned step no. not the step no.1 .

(b) The repeat operation step no. change command can be executed during positioning operation.

(c) Auxiliary data setting of repeat operation step no. change command

Items	Setting value	Description
Step	1 ~ 400	Set the repeat operation step no. to change

(2) Operation timing

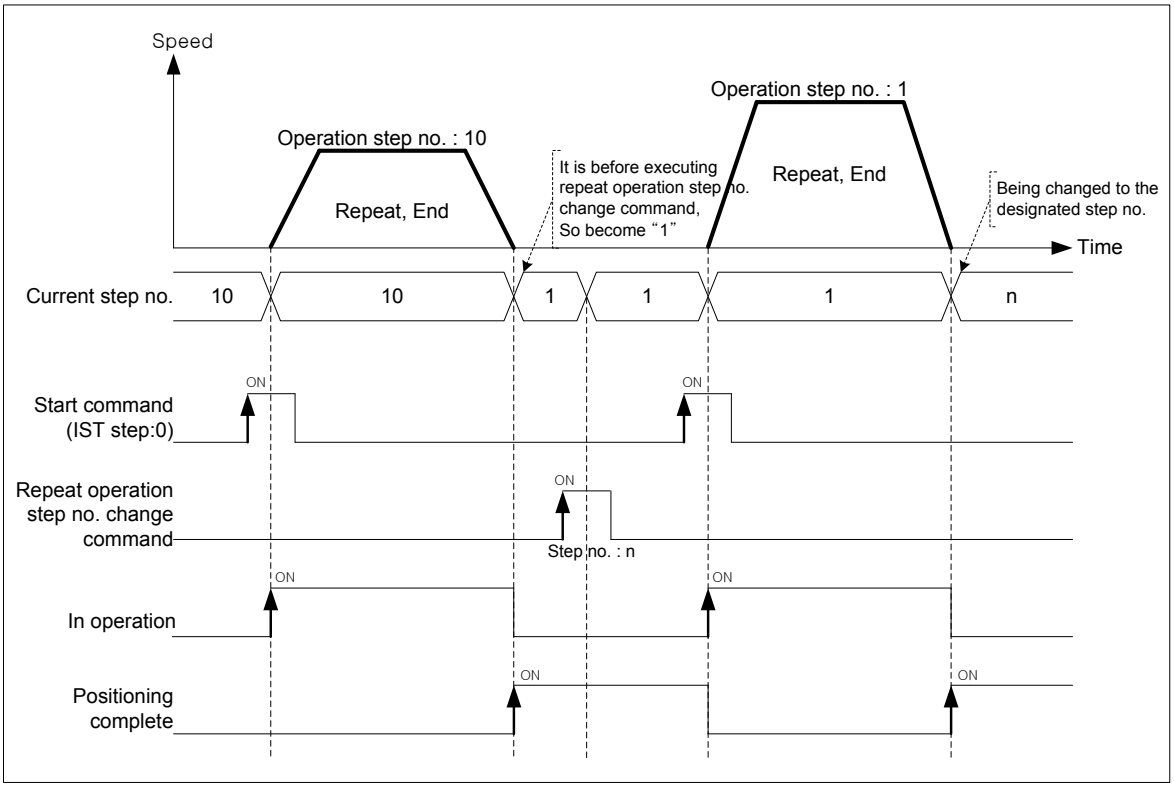

Note

The current operation step is not changed at the moment of executing the command. After "Repeat" positioning data operation is finished, it is changed to the step designated by repeat operation step no. change command.

(3) Restrictions

In the case below, repeat operation step no. change command is not executed.

(a) Step no. to change is out of 0 ~ 400. (error code:442)

If the step no. is 0, keep the previous step no.

[Example] Execute repeat operation step no. change command on axis1 operating by absolute, shortcut position control.

■ Current position of axis1 : 0
■ Setting example in XG-PM
▪ Operation data of axis1

Step no.	Control method	Operation method	Goal position [pls]	Operation speed [pls/s]	Acc. no.	Dec. no.	M code	Dwell time
1	Absolute single axis position control	Singular, Go on	1000	1000	No.1	No.1	0	0
2	Absolute single axis position control	Singular, continuous	2000	2000	No.1	No.1	0	0
3	Absolute single axis position control	Singular, continuous	4000	3000	No.1	No.1	0	0
4	Absolute single axis position control	**Repeat**, Continuous	2000	3000	No.1	No.1	0	0
5	Absolute single axis position control	Singular, End.	5000	2000	No.1	No.1	0	0

■ Operation pattern

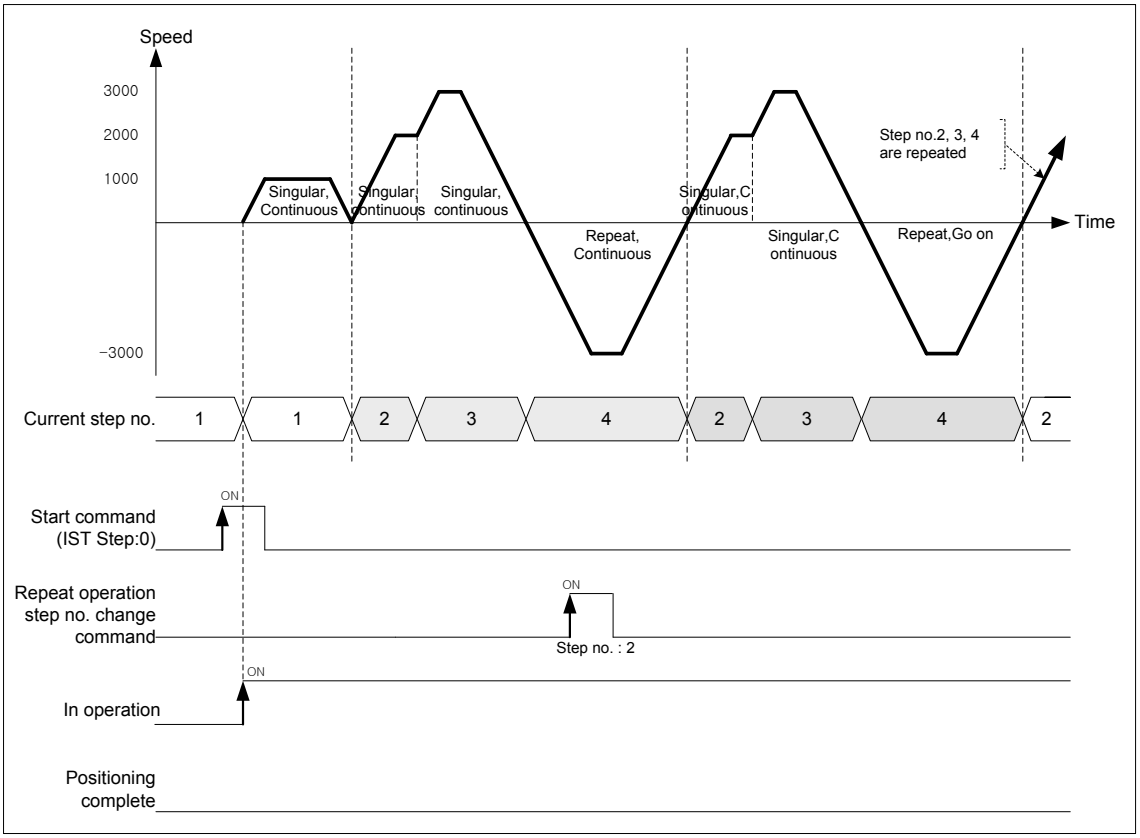

9.6 Auxiliary Function of Control

9.6.1 High/Low limit

Positioning module includes Hardware high/low limit and Software high/low limit.

(1) Hardware High/Low Limit

(a) This is used to stop the positioning module promptly before reaching Stroke limit/Stroke End of the Driver by installing the stroke limit of positioning module inside Stroke limit/Stroke end of the Driver. In this case, if it is out of the high limit, Error 492 will occur and if it is out of the low limit, Error 493 will occur.

(b) Input of high/low limit switch is connected to input/out terminal block.

(c) When positioning module is not in the controllable area, positioning operation is not executed.

(d) If it is stopped by hardware high/low limit detection, move it into the controllable area with Jog operation in reverse direction of detected signal.

(e) Hardware high/low limit is shown as follows.

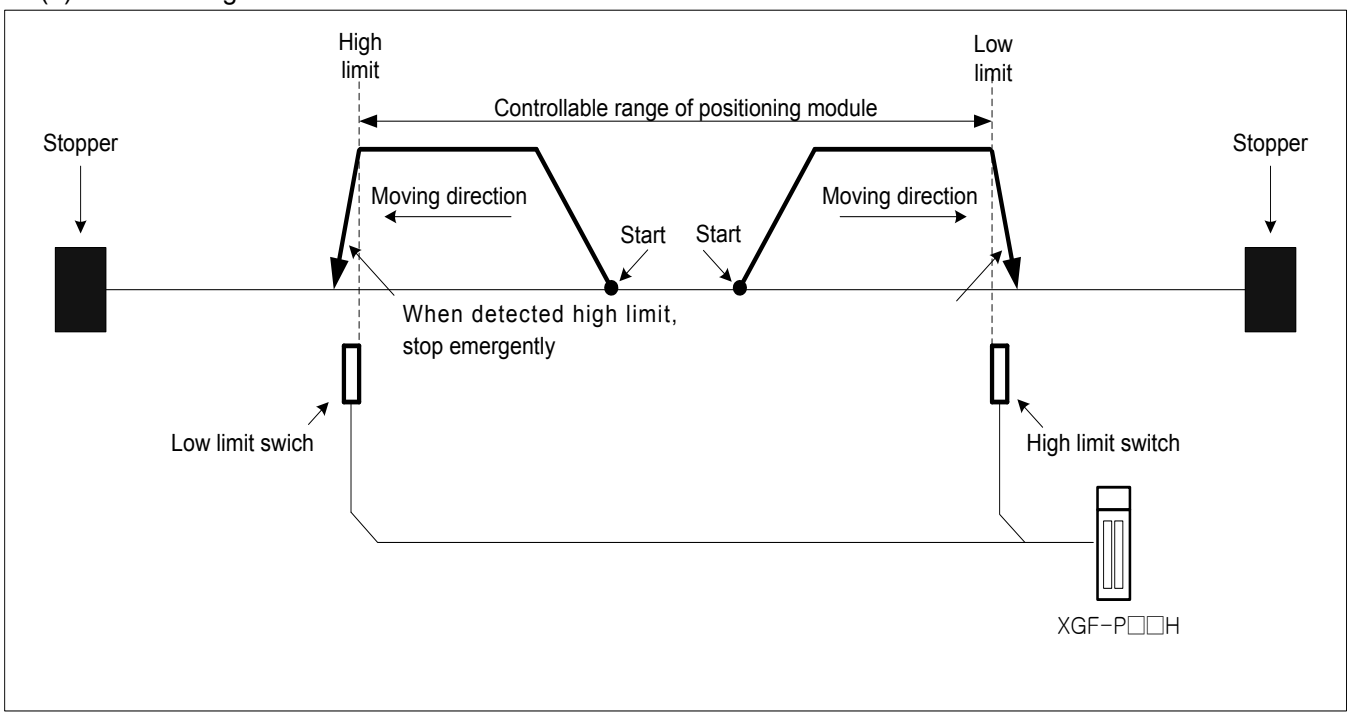

(f) Emergent stop when hardware high/low limit is detected

When hardware high/low limit is detected, stop the current positioning control and then decelerate within “Dec. time for Emergent stop”.

■ Related parameter setting (Basic parameter)

Items	Setting value	Description
Dec. time of Emergent stop	0 ~ 2147483647 [ms]	Set the dec. time for emergent stop. Dec. time for emergent stop means the time needed at decelerating by bias speed.

(2) Software High/Low Limit

(a) This command is for setting the movable range of machine as software high/low limit. If it is out of the range in operation, stop emergently within dec. time for emergency. In other words, this command is for preventing errors, malfunctions and being out of range.

(b) If it is out of the range of software high/low limit, set external input high/low limit for use.

(c) Checking range of software high/low limit is executed at the beginning.

(d) If software high/low limit is detected, error arises. (High limit error:501, Low limit error:502)

(e) User may set the position value of high/low limit on extended parameter.

■ Related parameter setting (Extended parameter)

Items	Setting value	Description
Soft High Limit	-2147483648 ~ 2147483647	Set the position of soft high limit
Soft Low Limit	-2147483648 ~ 2147483647	Set the position of soft low limit

(f) Software high/low limit is shown as follows.

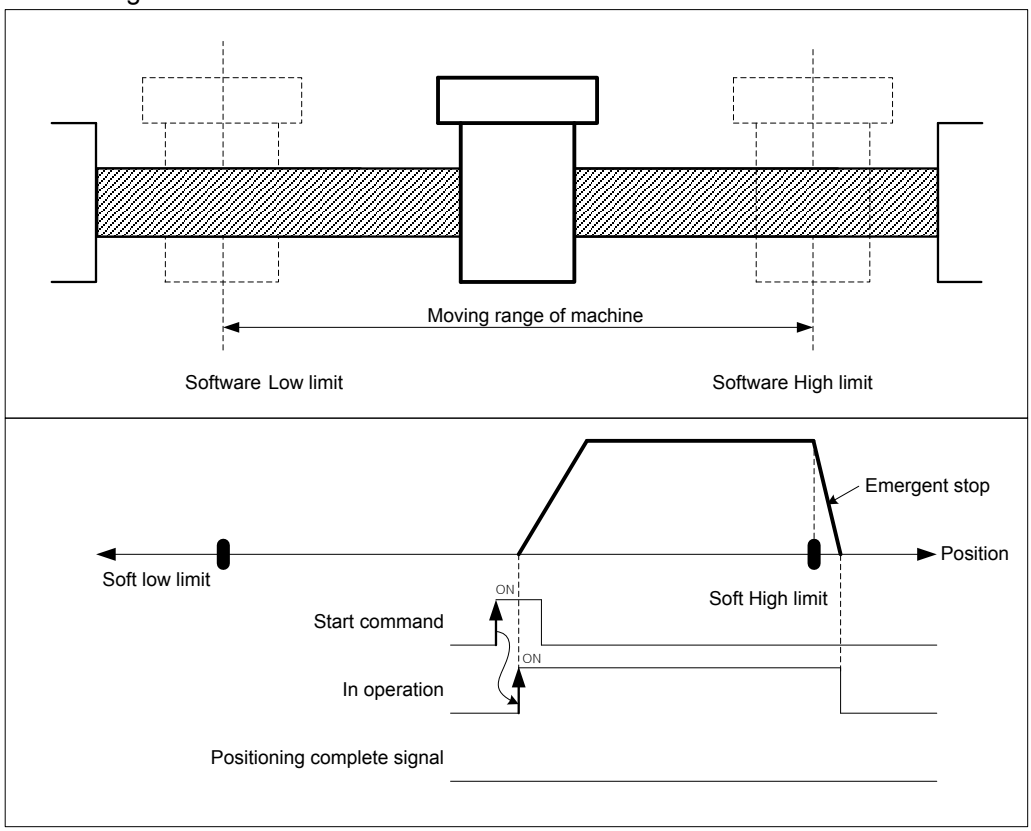

(g) In the case below, software high/low limit are not detected.

- The value of soft high limit 2147483647, the value of soft low limit is -2147483648
- The value of soft high and low limit are same. (High limit = Low limit)

Note

(1) It does not detect software high/low limit in origin-undecided state
(2) Not to detect software high/low limit
If the value of current position becomes 2147483647 in forward operation, the current position becomes -2147483646 and keeps operating in forward direction.
If the value of current position becomes -2147483647 in reverse operation, the current position becomes 2147483646 and keeps operating in reverse direction.

9.6.2 M code

This is used to confirm the current operation step no. and carry out the auxiliary work (Clamp, Drill rotation, Tool change etc.) by reading M Code from the program.

(1) Characteristics of Control

(a) M code should be set in the M code item of operation data.(Setting range : 1 ~ 65535)

(b) If M code is set as “0”, M code signal will not occur.

(c) If M code occurs, M code no.(1 ~ 65535) and M code signal (On) will occur simultaneously.

(d) In case of Go-on operation mode, if M code no. and M code signal occur, it becomes standby for the next step; if executing M code release (APM_MOF) command, it carries out Go-on operation to the next step without start command.

(e) In continuous operation mode, even if M code no. and M code On signal occur, not to wait but execute continuous operation to the next step.

(f) User may turn M code signal off and set M code no. to 0 with M code release command. M code release command can be used even during operation.

(g) M code mode is set from M code output item of extended parameter. (0 : NONE, 1 : WITH, 2 : AFTER)

■ Related parameter setting (Extended parameter)

Items	Setting value	Description
M code mode	0 : None	Not to output M code signal and M code no.
	1 : With	Start and turn M code signal on at the same time, then output M code no. set in operation data.
	2 : After	After finishing positioning by start command, turn M code signal on and then output M code no. set in operation data.

(2) Operation timing

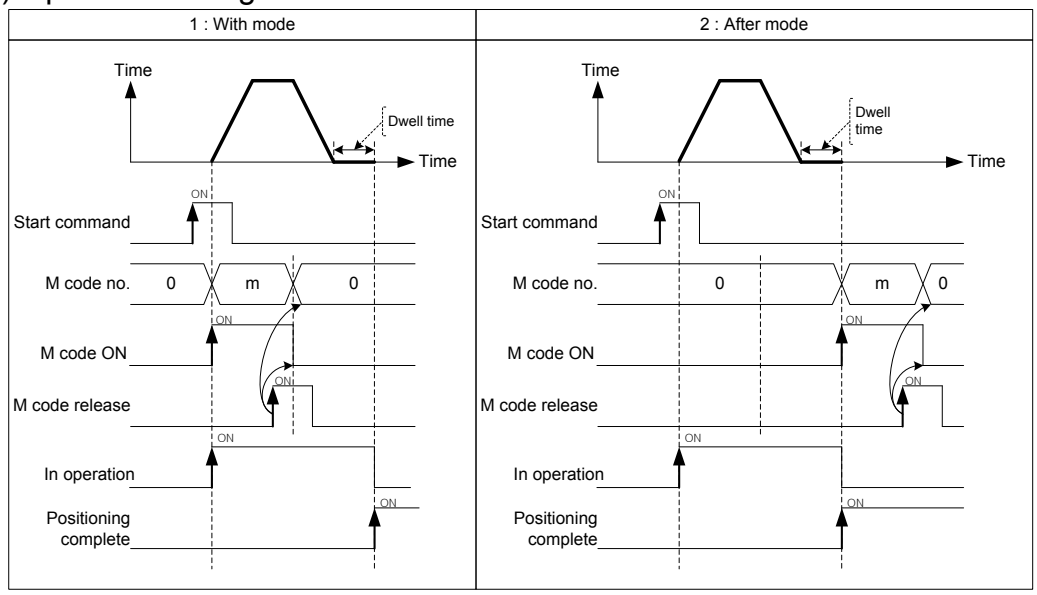

[Example] Set M code no. in operation data as follows and execute absolute, shortcut positioning control.

■ Current position of axis1 : 0
M code mode of basic parameter : With

■ Setting example in XG-PM

▪ Operation data of axis1

Step no.	Control method	Operation method	Goal position [pls]	Operation speed [pls/s]	Acc. no.	Dec. no.	M code	Dwell time
1	Absolute, shortcut positioning control	Singular, continuous	1000	2000	No.1	No.1	100	100
2	Absolute, shortcut positioning control	Singular, continuous	3000	2000	No.1	No.1	200	100
3	Absolute, shortcut positioning control	Singular, continuous	5000	2000	No.1	No.1	300	100

■ Operation pattern

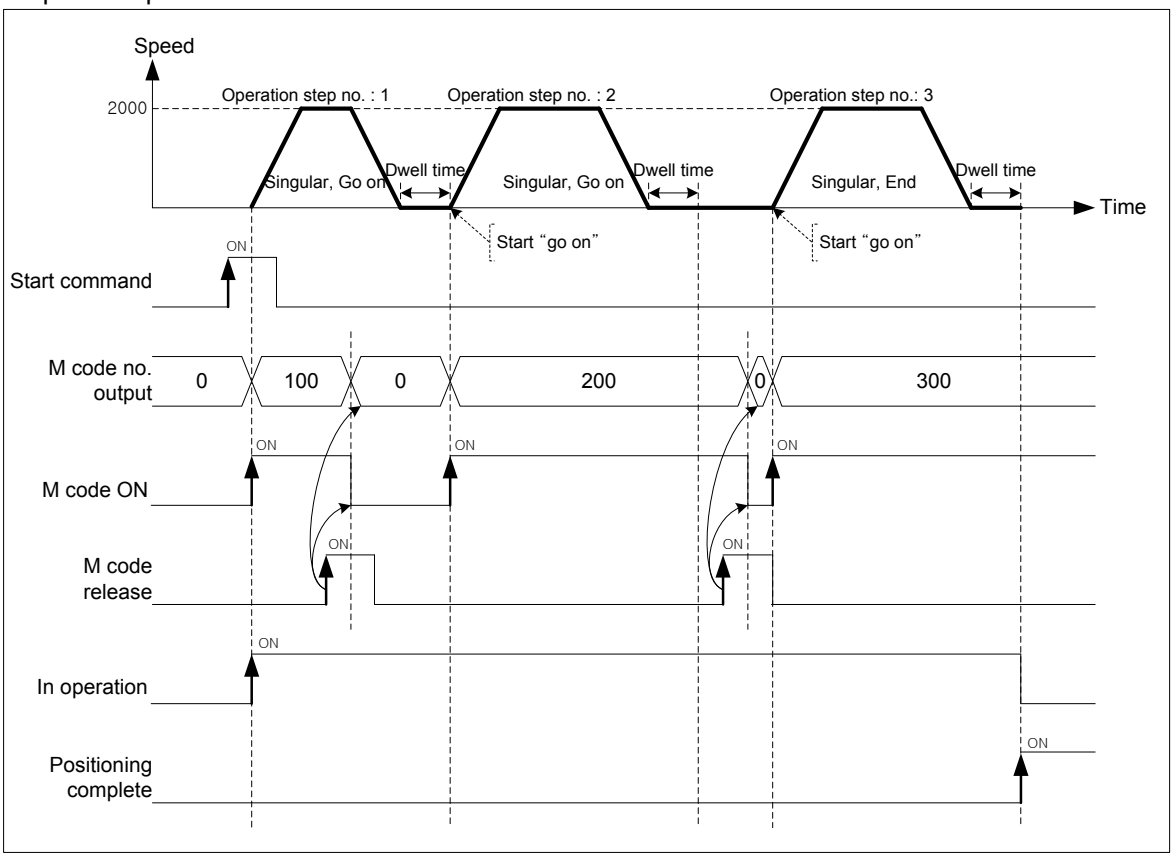

9.7 Data Modification Function

This function is for changing operation data and operation parameter of APM module.

9.7.1 Teaching Array

User may change the operating speed and the goal position of the step user designated with teaching command but without XG-PM.

(1) Characteristics of Control

(a) This command is for changing operating speed or the goal position on several steps.

(b) User may change maximum 16 data.

(c) RAM teaching and ROM teaching are available depending on the saving position.

■ RAM teaching

When executing teaching to operation data of APM module and operating APM module in power connection, user may change speed value or position value but the speed value and position value are not saved in non-power connection.

■ ROM teaching

When executing teaching to operation data of APM module and operating APM module in power connection, user may change speed value or position value and operation data is saved permanently even in non-power connection.

(d) The value of goal position being changed is position teaching, the value of operating speed being changed is speed teaching.

(e) The axis in operation may be the subject of position teaching or speed teaching.

(f) If user changes the value of goal position or operating speed frequently, this command is very useful for it.

(g) Auxiliary data setting of teaching array command

Items	Setting value	Description
Step	0 ~ 400	Set the step no. for teaching
Position	0 : RAM teaching 1 : ROM teaching	Set the method of teaching
Data	0 : Position 1 : Speed	Set the data items for teaching
The No.	1 ~ 16	Set the number of operating step

(h) Teaching Array command is available to be executed when the axis is operating. But teaching data of operating step do not apply instantly. Operating step data will apply end of present step operation

Note

The teaching data must be set in the data setting area for teaching array before teaching array command is executed. Refer to the teaching array command XTWR.

(2) Restrictions

Teaching array command may not be executed in the case as follows.

(a) The number of teaching array is out of the range (1~16). (Error code: 462)

(b) Teaching step no. is out of the range (1~400). (Error code: 465)

Total number (Teaching step no. + The number of Teaching) must be below 400.

9.7.2 Parameter Change from Program

User may modify the operation parameter set on XG-PM with teaching command for each parameter.

(1) Characteristics of Control

(a) There are 6 kinds of parameter teaching command. (Basic, Extended, Manual operation, Homing, External signal, common parameter teaching)

(b) Parameter teaching is not available in operation.

(c) RAM teaching and ROM teaching are available depending on the saving position.

■ RAM teaching

When executing teaching to operation data of APM module and operating APM module in power connection, user may change speed value or position value but the speed value and position value are not saved in non-power connection.

■ ROM teaching

When executing teaching to operation data of APM module and operating APM module in power connection, user may change speed value or position value and operation data is saved permanently even in non-power connection.

(2) Basic Parameter Teaching

(a) Change the setting value of designated item from basic parameter of APM module into teaching data.

(b) Auxiliary data setting of basic parameter teaching command

Item	Setting value		Description	
Teaching data	Refer to “setting range”		Set the teaching value of parameter selected	
			Setting range	
Teaching item	1	Speed limit	1 ~ 2147483647	Choose the parameter item to do execute teaching
	2	Acc.time 1	0 ~ 2147483647	
	3	Acc.time 2		
	4	Acc.time 3		
	5	Acc.time 4		
	6	Dec.time 1		
	7	Dec.time 2		
	8	Dec.time 3		
	9	Dec.time 4		
	10	Emergent Dec.time		
	11	Demultiply ouput pulse/rotation	1 ~ 200000000	
	12	Transferring distance/rotation	Depend on “Unit”	
	13	Unit	0:pulse 1:mm 2:inch 3:degree	
	14	Double precision of unit	0:x1 1:x10 2:x100 3:x1000	
	15	Speed unit	0: unit/time 1: rpm	
	16	Bias speed	1 ~ Speed limit	
	17	Pulse output mode	0:CW/CCW 1:PLS/DIR 2:PHASE	
Teaching method	0 : RAM Teaching 1 : ROM Teaching		Set the teaching method	

For the details about basic parameter items and setting value, refer to “Chapter 4 APM parameter and operation data”.

(3) Extended Parameter Teaching

(a) Change the setting value of designated item from extended parameter of APM module into teaching data.

(b) Auxiliary data setting of extended parameter teaching command

Items	Setting value		Description	
Teaching data	Refer to “Setting range”		Set the teaching value of parameter selected	
			Setting value	
Teaching items	1	Soft high limit	-2147483648 ~ 2147483647	Select the parameter item to execute teaching
	2	Soft low limit	-2147483648 ~ 2147483647	
	3	Backlash revision	0 ~ 65535	
	4	Positioning complete Output time	0 ~ 65535	
	5	Ratio of S-curve	1 ~ 100	
	6	Circular interpolating position of 2 axes linear interpolation continuous operation	0 ~ 2147483647	
	7	Acc./Dec. Pattern	0 : Trapezoid operation 1 : S-curve operation	
	8	M code mode	0 : None 1 : With 2 : After	
	9	Soft high/low limit In speed control	0 : Not to detect 1 : Detect	
	10	Condition for positioning complete	0 : Dwell time 1 : In-position signal 2 : Dwell time AND In-position signal 3 : Dwell time OR In-position signal	
	11	Positioning method of interpolation continuous operation	0 : Pass the goal position 1 : Pass near position	
	12	Circular interpoation of 2 axes linear interpolating continuous operation	0 : No circular interpolation 1 : Circular interpolating continuous operation	
	13	External speed /position control switching	0 : No allowance 1 : Allowance	
	14	External emergent/dec. stop	0 : Emergent stop 1 : Dec. stop	
	15	Coordinates of positioning speed override	0 : Absolte 1 : Relative	
	16	Pulse output direction	0: CW, 1: CCW	
	17	Infinite running repeat position	1 ~ 2147483647	
	18	Infinite running repeat enable/diable	0: Disable, 1: Enable	
	19	Speed/Position switching coordinate	0: Incremental 1: Absolute	
	20	Interpolation speed selection	0: Main axis speed 1: Synthetic speed	
Teaching method	0 : RAM teaching 1 : ROM teaching		Set the teaching method	

For the details about basic parameter items and setting value, refer to “Chapter 4 APM parameter and operation data”.

(4) Homing Parameter Teaching

(a) Change the setting value of designated item from homing parameter of APM module into teaching data.

(b) Auxiliary data setting of homing parameter teaching command

Items	Setting value		Description	
Teaching data	Refer to “setting range”		Set the teaching value of parameter selected	
			Setting range	
Teaching items	1	Position of origin	-2147483648 ~ 2147483647	Select the parameter item to execute teching
	2	High speed homing	Bias speed ~ Speed limit	
	3	Low speed homing	Bias speed ~ Speed of High speed homing	
	4	Acc.time for homing	0 ~ 2147483647	
	5	Dec.time for homing		
	6	Dwell time for homing	0 ~ 65535	
	7	Origin revision	-2147483648 ~ 2147483647	
	8	Restart time for homing	0 ~ 65535	
	9	Homing mode	0 : Near Origin/Origin (Off) 1 : Near Origin /Origin (On) 2 : High/Low limit Origin 3 : Near Origin 4 : High speed origin 5 : High/Low limit 6 : Origin	
	10	Direction for homing	0 : Forward 1 : Reverse	
Teaching method	0 : RAM teaching 1 : ROM teaching		Set the teaching method	

For the details about basic parameter items and setting value, refer to “Chapter 4 APM parameter and operation data”.

(5) Manual Operation Parameter Teaching

(a) Change the setting value of designated item from manual operation parameter of APM module into teaching data.

(b) Auxiliary data setting of manual operation parameter teaching command

Items	Setting value		Description	
Teaching data	Refer to “setting range”		Set the teaching value of parameter selected	
			Setting range	
Teaching items	1	Jog high speed	Bias speed ~ Speed limit	Select the parameter item to execute teching
	2	Jog low speed	Bias speed ~ Jog high speed	
	3	Jog acc. time	0 ~ 2147483647	
	4	Jog dec. time		
	5	Inching speed	Bias speed ~ Speed limit	
Teaching method	0 : RAM teaching 1 : ROM teaching		Set the teaching method	

For the details about basic parameter items and setting value, refer to “Chapter 4 APM parameter and operation data”.

(6) I/O Signal Parameter Teaching

(a) Change the setting value of designated item from I/O signal parameter of APM module into teaching data.

(b) Auxiliary data setting of I/O signal parameter teaching command

Items	Setting value		Description
Teaching data	Bit 0	High limit signal	Set the setting form of input signal parameter. If bit is 0, the corresponding signal is recognized as A contact, If it is 1, the signal is recognized as B contact.
	Bit 1	Low limit signal	
	Bit 2	Near origin signal	
	Bit 3	Origin signal	
	Bit 4	Emergent stop/Dec. stop signal	
	Bit 5	Speed/Position control switching signal	
	Bit 6	Drive ready signal	
	Bit 7	In-position signal	
	Bit 8	Deviation counter clear signal/ Position output signal	
	Bit 9 ~ Bit 15	-	
Teaching method	0 : RAM teaching 1 : ROM teaching		Set the teaching method

For the details about basic parameter items and setting value, refer to “Chapter 4 APM parameter and operation data”.

(7) Common Parameter Teaching

(a) Change the setting value of designated item from common parameter of XPM module into teaching data.

(b) Auxiliary data setting of common parameter teaching command

Items	Setting value		Description	
Teaching data	Refer to “setting range”		Set the teaching value of parameter selected	
			Setting range	
Teaching items	1	Speed override	0 : % setting 1 : speed setting	Select the parameter item to execute teching
	2	Encoder pulse input	0 : CW/CCW 1 multiplying 1 : PULSE/DIR 1 multiplying 2 : PULSE/DIR 2 multiplying 3 : PHASE A/B 1 multiplying 4 : PHASE A/B 2 multiplying 5 : PHASE A/B 4 multiplying	
	3	Maximum value of encoder	-2147483648 ~ 2147483647	
	4	Minimum value of encoder		
	5	Pulse output level	0 : Low Active 1 : High Active	
Teaching method	0 : RAM teaching 1 : ROM teaching		Set the teaching method	

For the details about basic parameter items and setting value, refer to “Chapter 4 XPM parameter and operation data”.

9.7.3 Operation Data Change from Program

User may modify the positioning operation data set on XG-PM with operation data teaching command.

(1) Characteristics of Control

(a) Change setting value of designated step and item from XPM module's operation data into teaching data.

(b) Operation data teaching command is available to be executed when the axis is operating. But teaching data of operating step do not apply instantly. Operating step data will apply end of present step operation.

(c) RAM teaching and ROM teaching are available depending on the saving position.

■ RAM teaching

When executing teaching to operation data of XPM module and operating XPM module in power connection, user may change speed value or position value but the speed value and position value are not saved in non-power connection.

■ ROM teaching

When executing teaching to operation data of XPM module and operating XPM module in power connection, user may change speed value or position value and operation data is saved permanently even in non-power connection.

(d) Auxiliary data setting of operation data teaching command

Items	Setting value		Description	
Teaching data	Refer to “Setting range”		Set the teaching value of parameter selected	
			Setting range	
Teaching items	1	Goal position	-2147483648 ~ 2147483647	Select the parameter item to execute teching
	2	Auxiliary point of Circular interpolation	-2147483648 ~ 2147483647	
	3	Operating speed	1 ~ Speed limit	
	4	Dwell time	0 ~ 65535	
	5	M code	0 ~ 65535	
	6	Set a sub axis	Set it on Bit 0 ~ Bit 3 0 : Not be set 1 : Be set	
	7	Helical interpolation	0 : Not use 1 ~ 4 : axis1 ~ axis4	
	8	No. of circular interpolation turn	0 ~ 65535	
	9	Coordinates	0 : Absolute 1 : Relative	
	10	Control method	0 : Shortcut position control 1 : Shortcut speed control 2 : Shortcut Feed control 3 : Linear interpolation control 4 : Circular interpolation control	
	11	Operating method	0 : Singular 1 : Repeat	
	12	Operating pattern	0 : End 1 : Go on 2 : Continuous	
	13	Size of circular arc	0 : Circular arc < 180 1 : Circular arc >= 180	
	14	Acc. no.	0 ~ 3	
	15	Dec. no.	0 ~ 3	
	16	Method of circular interpolation	0 : Middle point 1 : Center point 2 : Radius	
	17	Direction of circular interpolation	0 : CW 1 : CCW	
Step no.	0 ~ 400		Set the step no. of operation data to execute teaching	
Teaching method	0 : RAM Teaching 1 : ROM Teaching		Set the teaching method	

For the details about basic parameter items and setting value, refer to “Chapter 4 XPM parameter and operation data”.

9.7.4 Write/Read Variable Data

Parameter, operation data, CAM data can be read by “Read Variable Data” command and written by “Write Variable Data” command directly.

(1) Read Variable Data

(a) You read data you want by designating module internal memory address of parameter, operation data, CAM data directly.

(b) Reads data as many as “Block size” starting position set in “Read address” with WORD unit to CPU among parameter, operation data, CAM data. In case “CNT” is higher than 2, reads blocks with interval of “Block offset” starting “Read address” as many as “CNT”-1.

(c) Max. data size (block size x No. of block) you can read with one command is 128 WORD

(d) “Read Variable Data” command can be executed in operation.

(e) Auxiliary data setting of “Read Variable Data” command

Item	Setting value	Description
Read address	0 ~ 54217	Sets head address of Read Data
Block offset	0 ~ 54217	Sets offset between blocks of Read Data
Block size	1 ~ 128	Sets size of block
No. of block	1 ~ 128	Sets No. of Read Block

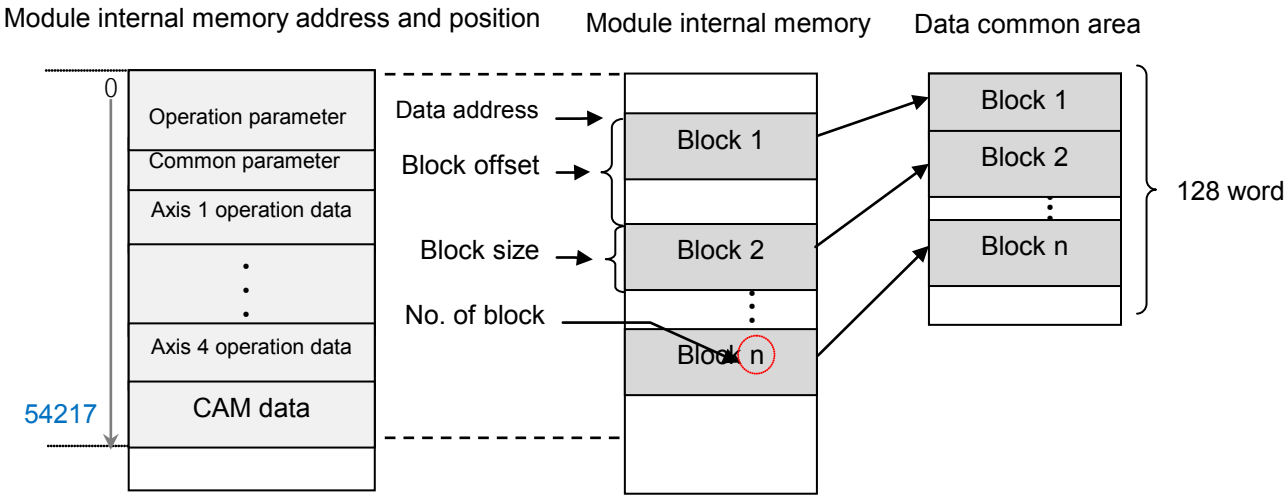

(f) Restriction

In the following case, error occurs and can’t execute “Read Variable Data” command

■ Data setting error (Error code: 711)

- Read data size (Block size x No. of block) is 0 or higher than 128 WORD.
- Read data address [Read address + {block offset x (No. of block -1)} + Block size is higher than last address value (54217)

Note

If you execute “Read Variable Data” command in XGK PLC, Read data from positioning module is saved in common area. To save in device for using in PLC program, use GETM command [Read address: 0, data size: Read data size (DWORD)]

In XGI/XGR PLC, Read data is saved in register set in Function Block automatically.

(2) Write Variable Data

(a) You write data you want by designating module internal memory address of parameter, operation data, CAM data directly.

(b) Writes data set in PLC program as many as “Block size” starting position set in “Write address” with WORD unit among parameter, operation data, CAM data of positioning module. In case “No. of block” is higher than 2, writes blocks with interval of “OFFSET” starting “Write address” as many as “CNT”-1.

(c) Max. data size (Block size x No. of block) you can write with one command is 128 WORD.

(d) “Read Variable Data” command can’t be executed in operation. But “Read Variable Data” command can be executed to User CAM data in User CAM operation.

(e) After executing “Write Variable Data” command, since the changed value is maintained while power is on, in order to keep the changed value, execute “Save parameter/Operation data” command

(f) Auxiliary data setting of “Write Variable Data” command

Item	Setting value	Description
Data device	0 ~ 54217	Sets device where data to write to module is saved
Write address	0 ~ 54217	Sets head address of positioning module internal memory
Block offset	0 ~ 54217	Sets offset between blocks of Write data
Block size	1 ~ 128	Sets size of block
No. of block	1 ~ 128	Sets No. of Write block

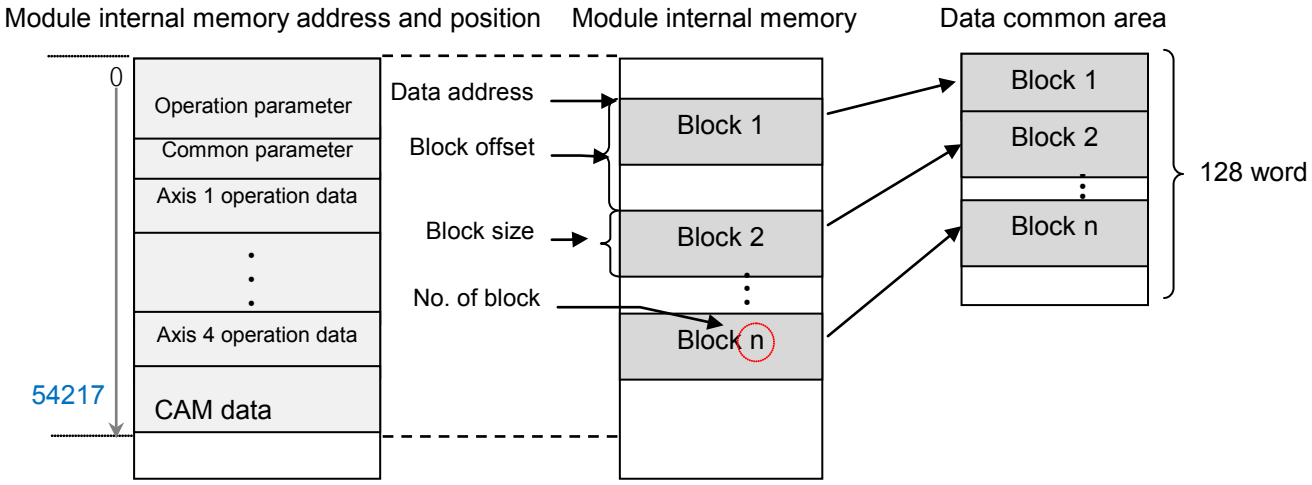

(g) Restriction

In the following case, error occurs and can’t execute “Read Variable Data” command

- Data range setting error (Error code: 711)
  - Write data size (Block size x No. of block) is 0 or higher than 128 WORD
  - Write data address [Write address + {Block offset x (No. of block -1)} + Block size] is higher than last address value (54217)
- Block overlap error (Error code: 713)
  - In case module internal block to write is overlapped each other (In case no. of block is higher than 2, block offset is smaller than block size)
- Execution inhibition error in operation (Error code: 712)
  - Any axis of positioning module is in operation

Appendix 1 Positioning Error Information & Solutions

Here describes the positioning error types and its solutions.

(1) Error Information of Basic Parameter

Error Code	Error Description	Solutions
101	Max. speed value of Basic Parameter exceeds the range for “0”	The speed limit of basic parameter for pulse units are bigger than bias speed and less than 500000 if it is Open collector, and bigger than bias speed less than 400000 if it is Line Driver.
102	Bias speed value of Basic Parameter exceeds the range.	Bias speed of Basic Parameter should be less than max. speed of Basic Parameter.
103	Pulse output mode value of Basic Parameter exceeds the range.	Pulse output mode of Basic Parameter is 0:CW/CCW 1: Pulse/Dir 2:Phase A/B. Select one among three.
104	Speed limit of basic parameter by degree is bigger than 180 out of range, so circular interpolation can not be executed.	Operate with lower speed limit of Circular Interpolation

(2) Error Information of Expanded Parameter

Error Code	Error Description	Solutions
111	Extended Parameter software high/low limit range error	S/W high limit of Extended Parameter should be greater than or equal to S/W low limit of Extended Parameter.
112	M Code Mode value of Extended Parameter exceeds the range.	M Code output of Extended Parameter is 0:None, 1:With, 2:After. Select one among three.
113	S-Curve rate of Extended Parameter exceeds the range.	Change S-Curve rate of Extended Parameter to be more than 1 and less than 100.

(3) Error Information of Manual Operation Parameter

Error Code	Error Description	Solutions
121	Jog high speed value of Manual operation parameter exceeds the range.	Set Jog high speed of Manual operation parameter to be greater than or equal to bias speed of Basic Parameter and less than or equal to max. speed of Basic Parameter.
122	Jog low speed value of Manual operation parameter exceeds the range.	Set Jog low speed of Manual operation parameter to be more than 1 and less than Jog high speed of Manual operation parameter.
123	Inching speed value of Manual operation parameter exceeds the range.	Set Inching speed of Manual operation parameter to be greater than or equal to bias speed of Basic Parameter and less than or equal to max. speed of Basic parameter.

(4) Error Information of Homing Origin Parameter

Error Code	Error Description	Solutions
131	Homing mode value of Homing parameter exceeds the range.	Homing method of Homing parameter is 0:Dog/Origin(Off), 1:Dog/Origin(On),2:High/low limit/Origin, 3: Near Point, 4:High speed origin, 5: High/low, 6:Origin Select one among seven.
132	Homing address of Homing parameter exceeds the range.	Set Homing address of Homing parameter to be greater than S/W low limit of Extended parameter and less than S/W high limit of Extended Parameter.
133	Homing high speed value of Homing parameter exceeds the range.	Set Homing high speed of Homing parameter to be greater than or equal to bias speed of Basic parameter and less than or equal to max. speed of Basic parameter.
134	Homing low speed value of Homing parameter exceeds the range.	Set Homing low speed of Homing parameter to be greater than or equal to bias speed of Basic parameter and less than or equal to Homing high speed of Homing parameter.

(5) Error Information of Common Parameter

Error Code	Error Description	Solutions
141	Encoder type value of Common parameter exceeds the range.	Set Encoder input signal of Common parameter to be between 0 and 5.
148	Encoder max/min value of common parameter Exceeds the range.	Set Encoder max value smaller than min value, also set encoder max/min value contains current position.

(6) Error Information of Operating Data

Error Code	Error Description	Solutions
151	Not available to set operation speed value of Operation data as “0”.	Set operation speed to be greater than “0”.
152	Operation speed of Operation data exceeds max. speed value.	Set operation speed to be less than or equal to max. speed set in the Basic Parameter.
153	Operation speed of Operation data is set less than bias speed.	Set operation speed to be greater than or equal to bias speed set in Basic Parameter.
155	Exceeds End/Go on/Continuous operation setting range of Operation data.	Set one from operation pattern (0:End, 1:Go on, 2: Continuous) of operation data to operate
156	Even the operation pattern settled continuous, next command cannot support continuous operation.	Set for abstract positioning control or speed control. If it is for current step command then next step command should be a interpolation command.
157	Even the operation pattern settled continuous, next command cannot support axis of current command.	If operation pattern is continuous, them set both Operation data and next step operation data equally
158	Even the operation pattern set continuous, current command cannot support continuous current command.	Continuous operation only can be operated when it is shortening position control, linear interpolation, and circular interpolation. In other commands, set operation option to end or continuous.
159	Goal position of operation data exceeds the range.	For positioning control operating change goal position more than 2,147,483,648 and less than 2,147,483,647.

(7) Error Information of Data Writing

Error Code	Error Description	Solutions
171	Parameter writing command cannot be done because of start command execution while XG-PM is sending common parameter.	Once current operation is done, eliminate error with error-reset command, then execute writing command again. Do not execute start operation while parameter sending.
172	Parameter writing command cannot be done because of start command execution while XG-PM is sending operating parameter.	Once current operation is done, eliminate error with error-reset command, then execute writing command again. Do not execute start operation while parameter sending.
173	Parameter writing command cannot be done because of start command execution while XG-PM is sending operating data.	Once current operation is done, eliminate error with error-reset command, then execute writing command again. Do not execute start operation while operating data sending.
174	Parameter writing command cannot be done because of start command execution while XG-PM is sending CAM data.	Once current operation is done, eliminate error with error-reset command, then execute writing command again. Do not execute start operation while CAM data sending.
175	Start command cannot be executed while writing sending-parameters or operating-data from XG-PM.	Execute again once writing of parameter or operating data are done.

(8) Error Information of Positioning command and Step control

Error Code	Error Description	Solutions
201	Not possible to carry out Homing command in the state of in operation.	Check if command axis is in operation when the Homing command is executed.
203	Not possible to carry out Homing command in the state of Servo Ready OFF.	Check if Driver Ready signal of command axis is OFF when Homing command is executed.
211	Not possible to carry out Floating origin setting command in the state of in operation.	Check if command axis is in operation when Floating origin setting command is executed.
212	Not possible to carry out Floating origin setting command in the state of Servo Ready OFF.	Check if Driver Ready signal of command axis is OFF when Floating origin setting command is executed.
221	Not possible to carry out Direct Start command in the state of in operation.	Check if command axis is in operation when Direct Start command is executed.
223	Not possible to carry out Direct Start command in the state of M Code ON.	Check if M code signal of command axis is ON when Direct Start command is executed. XMOF command can make M Code OFF.
224	Not possible to carry out Direct Start command at the absolute coordinate in the origin unsettled state.	Not possible to carry out absolute coordinate operation in the origin unsettled state. Check the coordinate of operation data to operate and the current origin determination. Available to carry out absolute coordinate operation after origin determination by Homing command or floating origin setting command.
225	Not possible to carry out Direct Start command in the state of Servo Ready OFF.	Check if Driver Ready signal of command axis is OFF when Direct Start command is executed.
226	Shortest Distance Control of Direct Start can't be executed in Incremental coordinate.	Change the coordinate from Absolute coordinate to Incremental coordinate.
227	Invalid target position in case of Shortest Distance Control at Unlimited Length Repeat mode.	For Shortest Distance Control at Unlimited Length Repeat mode, target position should be higher than 0 and smaller than "Unlimited Length Repeat Position" of Extended Parameter.
230	Not possible to carry out continuous operating out Indirect Start command in the state of feed control.	Execute indirect start with setting of feed control for operation control, continuous for operating pattern if it is set as continuous or end.
231	Not possible to carry out Indirect Start command in the state of in operation.	Check if command axis is in operation when Indirect Start command is executed.

Error Code	Error Description	Solutions
233	Not possible to carry out Indirect Start command in the state of M Code ON.	Check if M code signal of command axis is ON when Indirect Start command is executed Available to make M Code OFF by XMOF command.
234	Not possible to carry out Indirect Start command at the absolute coordinate in the origin unsettled state.	Not available to carry out absolute coordinate operation in the origin unsettled state. Check the coordinate of step to operate and the current origin determination state. Available to carry out absolute coordinate operation after origin determination by Homing command or floating origin setting command.
235	Not possible to carry out Indirect Start command in the state of Servo Ready OFF.	Check if Driver Ready signal of command axis is OFF when Indirect Start command is executed.
236	Not possible to carry out Continuous operation of Indirect Start at speed control.	Check if there is no step that control method is set as speed control in the middle of Continuous operation of position control among Operation data and operation pattern is set as Continuous.
237	Step no. of POINT start is limited up to 20.	Set the step no. for POINT start to be less than 20 and greater than 1
238	Not possible to carry out Continuous operation of Indirect Start at S-Curve acceleration / deceleration pattern.	Check if acc./dec. pattern of extended parameter of command axis is set as S-Curve.
239	Continuous Operation of Indirect Start can't be executed when Unlimited Length Repeat of main or sub axis is enabled.	Disable Unlimited Length Repeat setting of main or sub axis or change operation pattern to "End" or "Keep"
240	Interpolation Operation of Indirect Start can't be executed when Unlimited Length Repeat of main or sub axis is enabled.	Disable Unlimited Length Repeat setting of main or sub axis.
241	Not possible to carry out Linear interpolation Start in the state that main axis of linear interpolation is in operation.	Check if main axis is in operation when Linear interpolation command is executed.
242	Not possible to carry out Linear interpolation Start in the state that subordinate axis 1 of linear interpolation is in operation.	Check if subordinate axis 1 is in operation when Linear interpolation command is executed.
247	Not possible to carry out Linear interpolation Start in the state that M Code signal of main axis of Linear interpolation is ON.	Check if M Code signal of main axis is ON when Linear interpolation command is executed. Available to make M Code OFF by XMOF command.
248	Not possible to carry out Linear interpolation Start in the state that M Code signal of subordinate axis 1 of Linear interpolation is ON.	Check if M Code signal of subordinate axis 1 is ON when Linear interpolation command is executed. Available to make M Code OFF by XMOF command.
250	Not possible to carry out positioning operation of absolute coordinate in the state that main axis of Linear interpolation is origin unsettled.	Not available to carry out absolute coordinate operation in the origin unsettled state. Check the coordinate of step to operate and the current origin determination state. Available to carry out absolute coordinate operation after origin determination by Homing command or floating origin setting command.
251	Not possible to carry out positioning operation of absolute coordinate in the state that subordinate axis 1 of Linear interpolation is origin unsettled.	Not available to carry out absolute coordinate operation in the origin unsettled state. Check the coordinate of step to operate and the current origin determination state. Available to carry out absolute coordinate operation after origin determination by Homing command or floating origin setting command.
253	In case that main axis and subordinate axis is set wrong in Linear interpolation. (the case that the subordinate axis is not assigned, the case that only one axis is assigned, or the case that no axis is assigned)	Check if the subordinate axis is not assigned, or only one axis is assigned, or no axis is assigned when Linear interpolation command is executed.

Error Code	Error Description	Solutions
254	Not possible to carry out the operation as Servo Ready is OFF at the main axis of Linear interpolation	Check if Driver Ready signal of main axis is OFF when Linear interpolation command is executed.
255	Not possible to carry out the operation as Servo Ready is OFF at the subordinate axis 1 of Linear interpolation	Check if Driver Ready signal of subordinate axis 1 is OFF when Linear interpolation command is executed.
261	Main axis speed of linear interpolation exceeds its speed limit.	Set low for main axis speed so that linear interpolation speed limit would not exceeds.
262	Not possible to insert the circular because the position of 2axis continuous linear interpolation circular insertion are longer than goal position.	Set low for position of 2 axis linear interpolation continuous operating circular insertion from expanded parameter, smaller than goal position.
263	Not possible to insert the circular because two lines of 2axis continuous linear interpolation circular insertion are at the same position.	Set again for goal position or set “0:Not insert circular” for 2 axis linear interpolation continuous operating circular insertion.
264	Not possible to insert the circular because the radius of 2axis continuous linear interpolation circular insertion are bigger than 2147483647.	Set again for goal position so those two lines would not be at the same location or set “0:Not insert circular” for 2 axis linear interpolation continuous operating circular insertion then execute linear interpolation.
265	Not possible to insert the circular because the radius of 2axis continuous linear interpolation circular insertion are rarely small or its speed limits are too high.	Make bigger for circular insert position and less for speed limit or set “0:Not insert circular” for 2 axis linear interpolation continuous operating circular insertion then execute linear interpolation.
266	Not possible to insert the circular because the circular of 2axis continuous linear interpolation circular insertion are at the same position from where it is supposedly located.	Set again for goal position so those two lines would not be at the same location or set “0:Not insert circular” for 2 axis linear interpolation continuous operating circular insertion then execute linear interpolation.
270	Error of radius setting from radius circular interpolation.	Set radius setting from circular interpolation main axis operating data for 80% bigger than its half distance of beginning point to end point.
271	Not possible to carry circular interpolation start in the state that main axis of circular interpolation is in operation.	Check if main axis is in operation when circular interpolation command is executed.
272	Not possible to carry circular interpolation start in the state that subordinate axis of circular interpolation is in operation	Check if subordinate axis is in operation when circular interpolation command is executed.
275	Not possible to carry circular interpolation start in the state that M Code signal of main axis of circular interpolation is ON.	Check if M Code signal of main axis is ON when circular interpolation command is executed. Available to make M Code OFF by XMOF command.
276	Not possible to carry circular interpolation start in the state that M Code signal of subordinate axis of circular interpolation is ON.	Check if M Code signal of subordinate axis is ON when circular interpolation command is executed. Available to make M Code OFF by XMOF command.
277	Not possible to carry positioning operation of absolute coordinate in the state that main axis of circular interpolation is origin unsettled.	Not available to carry out absolute coordinate operation in the origin unsettled state. Check the coordinate of step to operate and the current origin determination state. Available to carry out absolute coordinate operation after origin determination by Homing command or floating origin setting command.
278	Not possible to carry positioning operation of absolute coordinate in the state that subordinate axis of circular interpolation is origin unsettled	Not available to carry out absolute coordinate operation in the origin unsettled state. Check the coordinate of step to operate and the current origin determination state. Available to carry out absolute coordinate operation after origin determination by Homing command or floating origin setting command.

Error Code	Error Description	Solutions
279	Incorrect setting of main axis from circular Interpolation. (Either, unset main axis, incorrect helical interpolation axis, exceeding number of current possible operating axis)	Execute circular interpolation after 1.Set one more operational axis from circular interpolation data except main axis 2. Set one more operate able axis from helical interpolation.
280	Not possible to carry out the operation as Drive Ready is OFF in main axis of circular interpolation.	Check if Driver Ready signal of main axis is OFF when circular interpolation command is executed.
281	Not possible to carry out the operation as Drive Ready is OFF in subordinate axis of circular interpolation.	Check if Driver Ready signal of subordinate axis 1 is OFF when circular interpolation command is executed.
282	Not possible to carry out degree operation in circular interpolation.	Check if the unit of Basic Parameter of main axis of circular interpolation command is set as degree.
283	Not possible to carry out degree operation in circular interpolation.	Check if the unit of Basic Parameter of subordinate axis of circular interpolation command is set as degree.
284	Not possible to carry out the operation if start point =center point (middle point) or center point (middle point) =end point in circular interpolation.	Check if the center point or middle point is set as the same point as start point or end point in circular interpolation.
285	The start point and end point is Not possible to be same in the middle point mode of circular interpolation.	Check if circular interpolation method of Common parameter is set as middle point and if the position of start point is not the same as end point.
286	Radius setting error in circular interpolation.	The radius of the circle to carry out circular interpolation operation is up to 2e31 pulse. Check if it is set in order to carry out the circular interpolation more than the size.
287	Not possible to carry out the operation as linear profile comes out of circular interpolation.	Check if circular interpolation method of Common parameter is set as Middle point and the middle point is set to be aligned with start point and end point.
290	Since angular velocity is greater than 90°, correct circle cannot be drawn.	Set operation speed lower than 90° for circular Interpolation angular velocity.
291	Not possible to carry out Synchronous Start command in the state of in operation.	Check if the Error occurred axis is included in Synchronous Start command and if there is no axis in operation when the command is executed.
293	Not possible to carry out Synchronous Start command in the state of M Code ON.	Check if the Error occurred axis is included in Synchronous Start command and if M Code signal is ON when the command is executed. Available to make M Code OFF by XMOF command
294	Not possible to carry out Synchronous Start command in case that there is no goal position.	Check if the Error occurred axis is included in Synchronous Start command, and if the goal position of operation data of the step to operate is not the same as the current position for absolute coordinate and is set as “0” for relative coordinate.
295	Not possible to carry out Synchronous Start command in the state that Servo Ready is OFF.	Check if the Error occurred axis is included in Synchronous Start command, and if Driver Ready signal is OFF when the command is executed.
296	In case that Synchronous Start command axis setting is wrong.	Check if only one axis of Synchronous Start command is assigned. The axis assignment address means 0 bit : X axis, 1 bit : Y axis, 2 bit : Z axis and each bit is set as “1” for axis assignment.
297	An error occurred from axis of synchronous start operating.	Execute synchronous start after eliminate an error element from error occurred axis.
301	Not possible to carry out Speed/Position control switching command not in the state of in operation.	Check if the axis is ‘stop’ state when speed/position control switching command is executed.
302	Not possible to carry out Speed/Position control switching command not in the state of speed control.	Check if the axis is ‘speed control’ state when speed/position control switching command is executed.

Error Code	Error Description	Solutions
303	Not possible to carry out Speed/Position control switching command at subordinate axis of Synchronous Start operation.	Check if the axis is in operation by subordinate axis of Synchronous Start operation when speed/position control switching command is executed.
304	Not possible to carry out Speed/Position control switching command if there is no goal position.	Check if the operation has the goal position when speed /position control switching command is executed.
306	For "position specified speed/position switching instruction", when "Unlimited length repetition= enable" and "Speed/position switching coordinate=absolute", the position value which makes the object go in the opposite direction is not valid.	For "position specified speed/position switching instruction", input the positive position value for the forward direction and the negative position value for the reverse direction.
311	Not possible to carry out Position/Speed control switching command not in the state of in operation.	Check if the axis is 'stop' state when position/speed control switching command is executed.
312	Not possible to carry out Position/Speed control switching command at subordinate axis of Synchronous Start operation.	Check if the axis is in operation by subordinate axis of Synchronous Start operation when position/speed control switching command is executed.
313	Not possible to carry out Position/Speed control switching command in the state of circular interpolation operation.	Check if the axis is in circular interpolation operation when position/speed control switching command is executed.
314	Not possible to carry out Position/Speed control switching command in the state of Linear interpolation operation.	Check if the axis is in linear interpolation operation when position/speed control switching command is executed.
316	Not possible to carry out Position/Speed switching command in the state of decreasing section.	Execute Position/Speed switching command before the decreasing of axis, while in increasing section or regular section.
317	Not possible to carry out Position/Speed switching command when it is not either at the positioning control or inching operation	Execute Position/Speed switching command while the commanding axis is positioning control or inching operation
322	Not possible to carry out deceleration stop command in the state of Jog operation.	Not possible to carry out deceleration stop command in the state of Jog operation.
324	Deceleration time setting from deceleration stop commands are out of range.	The range of deceleration time is between 0 and 2147483647. Execute deceleration command after set the value from its range.
331	Not possible to carry out Skip command not in the state of in operation.	Check if the axis is 'stop' state when Skip command is executed.
332	Not possible to carry out Skip command for subordinate axis of Linear interpolation operation.	Check if the axis is in operation by subordinate axis of Linear interpolation when Skip command is executed.
333	Not possible to carry out Skip command for subordinate axis of Synchronous Start operation.	Check if the axis is in operation by subordinate axis of Synchronous Start operation when Skip command is executed.
335	Not possible to carry out Skip command in the state of Jog operation.	Check if the axis is in Jog operation when Skip command is executed.
336	Not possible to carry out Skip command in the state of Direct Start operation.	Check if the axis is in Direct Start operation when Skip command is executed.
337	Not possible to carry out Skip command in the state of Inching operation.	Check if the axis is in Inching operation when Skip command is executed.
338	Not possible to carry out Skip command for subordinate axis of circular interpolation operation.	Check if the axis is in operation by subordinate axis of circular interpolation operation when Skip command is executed.
341	Not possible to carry out Synchronous Start by Position command in the state of in operation.	Check if the axis is in operation when Synchronous Start by Position command is executed.
343	Not possible to carry out Synchronous Start by Position command in the state of M Code ON.	Check if the M Code signal of the axis is ON when Synchronous Start by Position command is executed. Available to make M Code OFF by XMOF command.

Error Code	Error Description	Solutions
344	Not possible to carry out Synchronous Start by Position command at the absolute coordinate in the state of origin unsettled.	Not available to carry out absolute coordinate operation in the origin unsettled state. Check the coordinate of step to operate and the current origin determination state. Available to carry out absolute coordinate operation after origin determination by Homing command or floating origin setting command.
345	Not possible to carry out Synchronous Start by Position command in the state that Servo Ready is OFF.	Check if Driver Ready signal of the axis is OFF when Synchronous Start by Position command is executed.
346	Not possible to carry out Synchronous Start by Position command in the state that the origin of main axis is not settled.	Check if main axis is in the origin unsettled state when Synchronous Start command is executed.
347	There is error in setting main axis/subordinate axis of Synchronous Start by Position command.	Check if main axis of Synchronous Start by Position command is set as the same as command axis. Main axis is set by writing 0(X axis),1(Y axis),2(Z axis) to the setting address.
350	Not possible to carry out Synchronous Start by Speed command in the state of in operation of main axis.	Execute Synchronous Start by Speed command while main axis Is not operating when it is state of stop.
351	Not possible to carry out Synchronous Start by Speed command in the state of in operation.	Check if the axis is in operation when Synchronous Start by Speed command is executed.
353	Not possible to carry out Synchronous Start by Speed command in the state of M Code ON.	Check if the M Code signal of the axis is ON when Synchronous Start by Speed command is executed. Available to make M Code OFF by XMOF command.
354	Not possible to carry out Synchronous Start by Speed command in the state that Servo Ready is OFF.	Check if Driver Ready signal of the axis is OFF when Synchronous Start by speed command is executed.
355	There is error in setting main axis/subordinate axis of Synchronous Start by Speed command.	Check if main axis of Synchronous Start by Speed command is set as the same as command axis. Main axis is set by writing 0(X axis),1(Y axis),2(Z axis) to the setting address.
356	There is error in main axis rate (main axis rate=0) of Synchronous start by speed command.	Main axis rate of Synchronous start by speed can't be 0. Set as -32768 ~ 32767 except 0.
357	The speed of Synchronous Start by Speed command cannot exceeds its speed limit.	Set low for main axis ratio/second axis ratio values so The value would not exceed its limitation.
361	Not possible to carry out Position Override command not in the state of in operation (Busy).	Check if the axis is 'stop' state when Position Override command is executed.
362	Not possible to carry out Position Override command not in the state of in dwell.	Check if the axis is in dwell when Position Override command is executed..
363	Not possible to carry out Position Override command not in the state of positioning operation.	Check if the axis is in operation by position control when Position Override command is executed.
364	Not possible to carry out Position Override command for the axis of Linear interpolation operation.	Check if the axis is in Linear interpolation operation when Position Override command is executed.
365	Not possible to carry out Position Override command for the axis of circular interpolation operation.	Check if the axis is in circular interpolation operation when Position Override command is executed.
366	Not possible to carry out Position Override command for the subordinate axis of Synchronous operation.	Check if the axis is in operation by subordinate axis of Synchronous Start operation when Position Override command is executed.
371	Not possible to carry out Speed Override command not in the state of in operation (Busy).	Check if the axis is 'stop' state when Speed Override is executed.
372	Exceeds the range of speed override value.	Speed value of Speed Override command should be less than or equal to max. speed set in Basic Parameter. Check the speed value.

Error Code	Error Description	Solutions
373	Not possible to carry out Speed Override command for the subordinate axis of Linear interpolation operation.	Check if the axis is in operation by subordinate axis of Linear interpolation operation when Speed Override command is executed.
374	Not possible to carry out Speed Override command for the axis of circular interpolation operation.	Check if the axis is in operation by subordinate axis of circular interpolation operation when Speed Override command is executed.
375	Not possible to carry out Speed Override command for the subordinate axis of Synchronous operation.	Check if the axis is in operation by subordinate axis of Synchronous Start operation when Speed Override command is executed.
377	Not possible to carry out Speed Override command in the deceleration section.	Check if the axis is in the state of deceleration stop when Speed Override command is executed.
378	Not possible to carry out Speed Override command in S-curve acceleration/deceleration pattern.	Check if the acceleration/deceleration pattern of Extended Parameter of command axis is set as S-Curve.
381	Not possible to carry out Random position speed override command not in the state of in operation.	Check if the axis is 'stop' state when Random position speed override command is executed.
382	Not possible to carry out Random position speed override command not in positioning operation.	Check if the axis is in speed control operation when Random position speed override command is executed.
383	Exceeds the speed override value range of Random position speed override command.	Speed value of Random position speed override command should be less than or equal to max. speed set in Basic Parameter. Check the speed value.
384	Not possible to carry out Random position speed override command for the subordinate axis of Linear interpolation operation.	Check if the axis is in operation by subordinate axis of Linear interpolation operation when Random position speed override command is executed.
385	Not possible to carry out Random position speed override command for the axis of circular interpolation operation.	Check if the axis is in circular interpolation operation when Speed Override command is executed.
386	Not possible to carry out Random position speed override command for the subordinate axis of Synchronous operation.	Check if the axis is in operation by subordinate axis of Synchronous Start operation when Speed Override command is executed.
389	Not possible to carry out Random position speed override command in S-Curve acceleration / deceleration pattern.	Check if the acceleration/deceleration pattern of Extended Parameter of command axis is set as S-Curve
390	Not possible to carry out Continuous operation command in S-Curve acceleration/deceleration pattern.	Check if the acceleration/deceleration pattern of Extended Parameter of command axis is set as S-Curve
391	Not possible to carry out Continuous operation command not in the state of in operation.	Check if the axis is 'stop' state when Continuous operation command is executed.
392	Not possible to carry out Continuous operation command not in the state of in dwell.	Check if the axis is in dwell when Continuous operation command is executed.
393	Not possible to carry out Continuous operation command not in the settled of positioning operation.	Check if the axis is in speed control operation when Continuous operation command is executed.
394	Speed data value of Continuous operation command exceeds the allowable range.	Speed value of Continuous operation command should be less than or equal to max. speed set in Basic Parameter. Check the speed value.
395	Not possible to carry out Continuous operation command for the subordinate axis of Linear interpolation operation.	Check if the axis is in operation by subordinate axis of Linear interpolation operation when Continuous operation command is executed.
396	Not possible to carry out Continuous operation command for the axis of circular interpolation operation axis.	Check if the axis is in circular interpolation operation when Continuous operation command is executed.
397	Not possible to carry out Continuous operation command for the subordinate axis of Synchronous operation.	Check if the axis is in operation by subordinate axis of Synchronous Start operation when Continuous operation command is executed.
399	Not possible to carry out Continuous operation command at the last step of Operation data.	Check if the axis is in operation of 400th step when Continuous operation command is executed.
400	Not possible to carry out Continuous operation command in the state of Direct Start operation.	Check if the axis is in operation by Direct Start command that Continuous operation command is executed.

Error Code	Error Description	Solutions
401	Not possible to carry out Inching command in the state of in operation.	Check if the axis is in operation when Inching command is executed.
403	Not possible to carry out Inching command in the state that Drive Ready is OFF.	Check if Drive Ready signal of the axis is OFF when Inching command is executed.
411	Not possible to carry out Jog Start command in the state of in operation.	Check if the axis is in operation when Jog Start command is executed.
413	Not possible to carry out Jog Start command in the state that Servo Ready is OFF.	Check if Driver Ready signal of the axis is OFF when Jog Start command is executed.
431	Not possible to carry out Return to the Position before Manual Operation in the state of in operation.	Check if the axis is in operation when Return to the position before manual operation command is executed .
434	Not possible to carry out Return to the Position before Manual Operation in the state that Drive Ready is OFF.	Check if Driver Ready signal of the axis is ON when Return to the position before manual operation command is executed.
441	Not possible to carry out Start step no. Change/Repeat Operation Start step no. assignment command in the state of in operation.	Check if the axis is in operation when Start step no. change /repeat command is executed.
442	Exceeds the step assignment range of Start step no. Change/Repeat Operation Start step no. assignment command.	Check if the setting step value of Start step no. change command or repeat operation start step no. assignment command is greater than or equal to 1 and less than or equal to 400.
451	Not possible to carry out Current Position Preset command in the state of in operation.	Check if the axis is in operation when Current position preset command is executed.
452	Not possible to set the auxiliary position data value out of range of software high/low limit while Current Position Preset command is executed.	Check if the position value of current position preset command is within the range of soft high /low limit set in Extended Parameter.
461	Not possible to carry out Position Teaching command in the state of in operation.	Check if the axis is in operation when Position teaching command is executed.
462	Not possible to carry out Teaching Array command for the data over 16.	Check if the data no. of Teaching Array command is set in the range that is greater than or equal to 1 and less than or equal to 16.
463	Not possible to carry out Speed Teaching command in the state of in operation.	Check if the axis is in operation when Speed teaching command is executed.
465	Error from step number appointing which are about to execute teaching operation.	Make sure step for teaching operation is smaller than 400 or same as 400.
466	Teaching list error for multi teaching command.	Execute teaching command after set teaching data list as 0:position or 1:speed
467	Teaching method error for multi teaching command.	Execute teaching command after set teaching method as 0:position or 1:speed
471	Parameter teaching command cannot be Executed while its operating.	Check if the axis was operating when parameter teaching commands are executing
472	Operating data teaching command cannot be Executed while its operating.	Check if the axis was operating when operating Data teaching commands are executing
473	Set data cannot be teaching.	Execute teaching command after setting right value for parameter teaching data or operating data teaching list.
474	Parameter/Operation data saving commands cannot be done while the axis is operating.	Check if the axis is operating when Parameter/ Operation data saving commands are operating. Execute Parameter/Operation command when any axis are not operating.
475	Error of value for teaching data is out of range.	Execute teaching command after setting value of parameter teaching or operating data teaching data among its set range.
476	Error of value for teaching method is out of range.	Execute teaching command after setting value of parameter teaching or operating data teaching data for 1(RAM teaching) or 2(ROM teaching).
477	Parameter/operation data may be damaged because of power failure during saving parameter/operation data.	Write parameter/operation data by "Writing Project" instruction at XG-PM.

Error Code	Error Description	Solutions
478	CAM data may be damaged because of power failure during saving CAM data.	Write CAM data by "Writing Project" instruction at XG-PM.
481	Internal emergency stop	Eliminate reason of emergency stop and execute XCLR command to delete the error.
491	Error of external emergency stop	Eliminate reason of emergency stop and execute XCLR command to delete the error.
492	Hard Upper Error	Be out of limited external upper signal range by using counter direct jog command. Then execute XCLR command to delete the error.
493	Hard Lower Error	Be out of limited external lower signal range by using direct jog command. Then execute XCLR command to delete the error.
501	Soft Upper Error	Be out of limited soft upper range by using counter direct jog command. Then execute XCLR command to delete the error.
502	Soft Lower Error	Be out of limited soft upper range by using direct jog command. Then execute XCLR command to delete the error.
511	Inappropriate command	Check the commands are appropriate. Look up the references for COMMANDS.
512	Step number of auxiliary data is out of range.	Commands set for bigger than 400. Set it Between 1 and 400.
522	The command cannot be done when the signal of Drive Ready is OFF during the operation.	Execute again once Drive Ready is ON.
531	Error for Encoding number exceed from Encoder preset command.	Execute Encoder preset command after set “0” For encoder number.
532	Preset command cannot be done because of the axis which using encoder as a main axis	Execute Encoder preset when the encoder using axis is not operating
534	The position of Encoder preset exceeds from Max or Min value of encoder.	Execute Encoder preset command after set the value of encoder position preset as bigger than Min value and smaller than Max value.
541	Ellipse interpolation cannot be operated while main axis of circular interpolation is operating.	Execute the Ellipse interpolation command when main axis is not operating.
542	Ellipse interpolation cannot be operated while support axis of circular interpolation is operating.	Execute the circular interpolation command when subordinate axis is not operating
543	Ellipse interpolation start cannot be operated when M code from main axis circular interpolation is “ON.”	Execute Ellipse interpolation command after set M code from main axis Ellipse interpolation is “OFF” with XMOF command.
544	Ellipse interpolation start cannot be operated when M code from subordinate axis circular interpolation is “ON.”	Execute Ellipse interpolation command after set M code from subordinate axis Ellipse interpolation is “OFF” with XMOF command.
545	Unable to execute the determine absolute coordinate position operation when ellipse interpolation main axis is not positioned.	Execute ellipse interpolation command after turning off the M Code ON signal of the main axis with Release M Code (MOF) command.
546	Not possible to carry out absolute coordinate positioning operation in the state that the origin of main axis is not settled.	Execute Ellipse interpolation command after set main axis as a state of being origin with homing command or floating origin setting.
547	Incorrect setting for main and subordinate axis from Ellipse interpolation.(Unset for main/ subordinate axis Set as Helical interpolation Exceed number of possible current operating Axis.)	Execute Ellipse interpolation after set a axis From subordinate axis setting beside its main axis and unset Helical interpolation.
548	Ellipse interpolation cannot be operated with middle point setting and radius setting.	Ellipse interpolation only can operate in center point setting. Execute Ellipse interpolation after changing operating data Ellipse interpolation mode for center point setting.
549	Cannot be operated when Drive Ready of Ellipse interpolation main axis is “OFF.”	Execute Ellipse interpolation command after Drive Ready is “ON” of main axis.
550	Cannot be operated when Drive Ready of Ellipse interpolation subordinate axis is “OFF.”	Execute Ellipse interpolation command after Drive Ready is “ON” of subordinate axis.

Error Code	Error Description	Solutions
551	Cannot be operated when unit of Ellipse interpolation main axis is “degree.”	Execute Ellipse interpolation command after Basic parameter unit is “degree” of main axis.
552	Cannot be operated when unit of Ellipse interpolation subordinate axis is “degree.”	Execute Ellipse interpolation command after basic parameter unit is “degree” of subordinate axis.
553	Cannot be operated when three parameters of Ellipse interpolation are same. (start point=main point=end point)	Execute Ellipse interpolation command after set those parameters differently. (start point, main point, end point)
554	Radius setting error from Ellipse interpolation.	The range of possible execution for Ellipse Interpolation is between 0 and 2147483647. Set radius of circle from its range, smaller than 2147483647pulse.
555	Exact circle cannot be draw because of degree of Ellipse interpolation is bigger than 90°	Set lower for operation speed so that degree of Ellipse interpolation is smaller than 90°
556	Continuous operation cannot be done for Ellipse interpolation.	Execute Ellipse interpolation after terminate operation step of circular interpolation.
557	Ellipse interpolation only can be operated when control setting is circular interpolation.	Execute Ellipse interpolation after change control setting for drive step of Ellipse interpolation to circular interpolation.
558	Operation cannot be executed when beginning point and end point of ellipse interpolation are not same.	Execute Ellipse interpolation after set the goal Position of ellipse interpolation operating step Same as current position.
559	Operation cannot be executed when operating degree of ellipse interpolation is “0.”	Set the value of operating degree for ellipse interpolation, larger than “0.”(1~65535)
571	Operation cannot be executed because of error from sub-coordinate axis of main axis by current axis.	Check the error from subordinate axis of main axis by current axis whether it is occurred during the operation of current axis.
572	Operation cannot be executed because of error from sub coordinate axis of main axis by interpolated axis.	Check the error from subordinate axis of main axis by current axis whether it is occurred during the operation of interpolated axis.
701	Not possible to carry out CAM command in the state of in operation.	Execute CAM command when main axis is not operating.
702	Not possible to carry out CAM command in the state of M Code ON	Execute CAM command after set M Code OFF from commanding axis with XMOF.
703	Not possible to carry out CAM command in the state that Drive Ready is OFF.	Execute CAM command when Drive Ready is “ON.”
704	Error of setting main/subordinate axis from CAM command.	Set main axis for CAM command as other axis besides its command axis from connecting axis. Set parameters are 1axis through 4axis.
705	CAM command of main axis cannot be executed during the operation.	Execute CAM command when the main axis setting of CAM command is not operating.
706	Error of CAM block setting from CAM command.	Execute CAM command after set a CAM block from CAM command as bigger than 1 and smaller than 8.
707	Error for CAM data of appointed block from CAM command.	Execute CAM command after set right data for appointed block from CAM command.
708	The speed of subordinate axis from CAM command cannot exceed its speed limit.	Set lower speed for main axis so that speed of subordinate axis from CAM data which is calculated by subordinate position would not exceed its speed limit.
709	For CAM command, in case main axis is encoder, main axis unit if CAM data should be pulse.	When you set the main axis of CAM data as encoder, set the unit of main axis of CAM block as pulse.
710	The speed of the master axis of cam command is so high that moving position per control period exceeds the master axis scope.	After slow down the speed of the master axis then operate the axis.
711	Data area setting value (block size and no. of block) of Variable Data Read/Write command is out of range.	Set the block size and no. of block for [block size X no. of block] to be 1~128.
712	Variable Data Write command can’t be executed during operation.	Check whether any axis is under operation when executing the Variable Data Write command

Error Code	Error Description	Solutions
713	Block area of Variable Data Write command is overlapped so Writing is unavailable.	In case the number of block is more than 2, set the block set to be larger than block size. (Or set the block size to be smaller than block offset)
721	Re-starting command can excute only re-starting possible command.	Check if the command is re-starting possible command.
722	Re-starting command can't excute when module is running condition.	Check if module is running state before excute the re-staring command.
731	Enable/Disable setup position output" command is not effective when extended parameter module output selection is set as "Deviation count clear.	To use the "setup position output" function, set the "module output selection" item of the extended parameter as "1: setup position output" and execute the command.
732	The number of data for "Enable/Disable setup position output" command exceeded.	Set the number of data for "Enable/Disable setup position output" command as more than 0, less than 50 and execute the command.
733	Current module(H/W) doesn't supported "specified position signal output function".	Change the module(H/W) to support "specified position signal output function".
741	Torque control command can't execute from the condition which is in the process of operating other than torque control.	Check if the order axis is in stop status and is not the operation condition then executes the torque control command.
742	Torque control command can't execute from the condition where the M cord signal is On.	After change the error axis to M-code off state using the MOF command then excutes the torque control command.
743	Torque control command will not be able to execute from servo off condition.	After change the error axis to servo-on state using the servo-on command then excutes the torque control command.
801	Current module of command axis is set lager than number of possible operating axis.	Execute after set a possible operating number of command axis for current module.

Appendix 2 Difference Comparison with Formal Product

Appendix 2.1 Functional Difference

Items \ Model	XGF-PO1A,PO2A,PO3A XGF-PD1A,PD2A,PD3A	XGF-PO1H,PO2H,PO3H,PO4H XGF-PD1H,PD2H,PD3H,PD4H
Output	Open collector: 200kpps Line driver: 1Mpps	Open collector: 500kpps Line driver: 4Mpps
No. of control axis	1/2/3 axis	1/2/3/4 axis
Interpolation Operating	2/3 axis linear interpolation 2 axis circular interpolation	2/3/4 axis linear interpolation 2 axis circular interpolation 3 axis helical interpolation
Control Method	Position control, Speed control Position/Speed switching control Speed/Position switching control	Position control, Speed control Position/Speed switching control Speed/Position switching control FEED control, CAM control
Positioning Data	400 data/axis	400 data/axis
Position unit	Pulse, mm, inch, degree	Pulse, mm, inch, degree
Speed unit	Pulse/sec, mm/min, inch/min, Degree/min	Pulse/sec, mm/min, inch/min, Degree/min, RPM
Data backup	Flash ROM	Flash ROM FRAM(parameter, operation data, affordable fast ROM teaching)
Positioning range	-2,147,483,648~2,147,483,647	-2,147,483,648~2,147,483,647
Connection range	Open collector: 2m Line driver: 10m	Open collector: 5m Line driver: 10m
Acceleration/deceleration pattern	Trapezoid type, S-type	Trapezoid type, S-type
Acceleration/deceleration time	1~65,535ms Selection available from 4 types of acceleration/deceleration pattern, symmetry acceleration/deceleration possible	1~2,147483647ms Selection available from 4 types of acceleration/deceleration pattern, dissymmetry acceleration/deceleration possible
Sudden Stop Time	N/A	1~2,147483647ms

Items \ Model	XGF-PO1A,PO2A,PO3A XGF-PD1A,PD2A,PD3A	XGF-PO1H,PO2H,PO3H,PO4H XGF-PD1H,PD2H,PD3H,PD4H
Homing origin	6 ways •By near point(0ff)+origin, By near point(on)+origin •high/low limit + origin •By near point •high/low limit •High speed origin homing	7 ways •By near point(0ff)+origin, By near point(on)+origin •high/low limit + origin •By near point •high/low limit •High speed origin homing •Origin
Manual operation	Jog operation MPG operation Symmetry operation	Jog operation MPG operation Symmetry operation
MPG operation	Maximum Input: 200kpps	Maximum Input: 500kpps
M code	1~65,535	1~65,535
Speed change	Setting Function(absolute value)	Setting Function(absolute value/percent)
Position change	Available	Available
Synchronization Operation	First axis synchronization: N:M possible MPG synchronization: N:M impossible	First axis synchronization: N:M possible MPG synchronization: N:M possible
Cam control	N/A	Available
Teaching function	RAM teaching ROM teaching: long teaching time	RAM teaching ROM teaching: short teaching time
Command axis	1 axis: 0, 2 axis:1, 3 axis: 2	1 axis: 1, 2 axis:2, 3 axis: 3, 4 axis 4
Command	Ex) Homing origin command ORG(XGK) APM_ORG(XGI/XGR)	Ex) Homing origin command XORG(XGK) XPM_ORG(XGI/XGR)

Appendix 2.2 Pin Array of Connector

(1) Pin array of XGF-PO1H/PO2H/PO3H/PO4H/PD1H/ PD2H/ PD3H/ PD4H

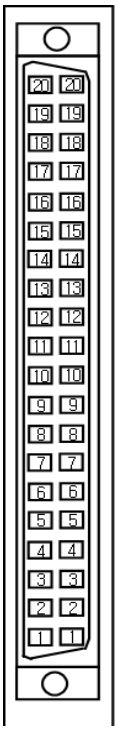

Axis 1/2

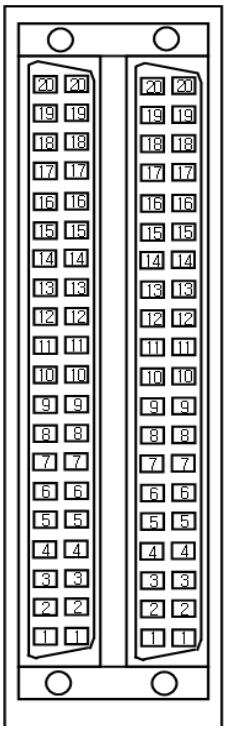

Axis 1/2/3/4

Axis 4	Axis 3	Axis 2	Axis 1
-	-	MPG A-	MPG A+
-	-	MPG B-	MPG B+
AX4_FP+	AX3_FP+	AX2_FP+	AX1_FP+
AX4_FP-	AX3_FP-	AX2_FP-	AX1_FP-
AX4_RP+	AX3_RP+	AX2_RP+	AX1_RP+
AX4_RP-	AX3_RP-	AX2_RP-	AX1_RP-
AX4_OV+	AX3_OV+	AX2_OV+	AX1_OV+
AX4_OV-	AX3_OV-	AX2_OV-	AX1_OV-
AX4_DOG	AX3_DOG	AX2_DOG	AX1_DOG
AX4_STOP	AX3_STOP	AX2_STOP	AX1_STOP
AX4_VTP	AX3_VTP	AX2_VTP	AX1_VTP
AX4_COM	AX3_COM	AX2_COM	AX1_COM
AX4_DR	AX3_DR	AX2_DR	AX1_DR
AX4_INP	AX3_INP	AX2_INP	AX1_INP
AX4_DR/INP COM	AX3_DR/INPCOM	AX2_DR/INP COM	AX1_DR/INP COM
AX4_CLR	AX3_CLR	AX2_CLR	AX1_CLR
AX4_CLR COM	AX3_CLR COM	AX2_CLR COM	AX1_CLR COM
AX4_HOME +5V	AX3_HOME +5V	AX2_HOME +5V	AX1_HOME +5V
AX4_HOME COM	AX3_HOME COM	AX2_HOME COM	AX1_HOME COM
24V COM	24V	24V COM	24V

(2) Pin Array of XGF- PO1A/PO2A/PO3A/PD1A/PD2A/PDA

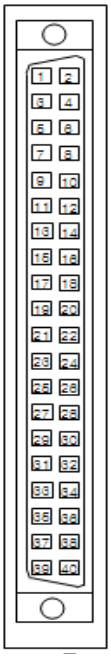

Axis 1

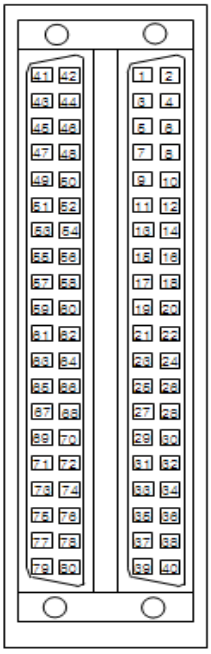

Axis 1/2/3

Axis 2/3		Common/Axis 1	
Y_FP+	Y_FP-	MPG A+	MPG A-
Y_RP+	Y_RP-	MPG B+	MPG B-
Y_OV+	Y_OV-	-	-
Y_STOP	Y_DOG	CON	EMG
Y_VTP	Y_ECMD	-	COM(CON,EMG)
Y_ZOG-	COM	-	-
DR/INP	DR/INP COM	-	-
HOME +24V	-	-	-
HOME +5V	HOME COM	-	-
24V	24V COM	-	-
Z_FP+	Z_FP-	X_FP+	X_FP-
Z_RP+	Z_RP-	X_RP+	X_RP-
Z_OV+	Z_OV-	X_OV+	X_OV-
Z_STOP	Z_DOG	X_STOP	X_DOG
Z_VTP	Z_ECMD	X_VTP	X_ECMD
Z_ZOG-	COM	X_ZOG-	COM
DR/INP	DR/INP COM	DR/INP	DR/INP COM
HOME +24V	-	HOME +24V	-
HOME +5V	HOME COM	HOME +5V	HOME COM
24V	24V COM	24V	24V COM

Appendix 3 Module Internal Memory Address of “Read/Write Variable Data” command

Appendix 3.1 Parameter memory address

	Axis 1		Axis 2		Axis 3		Axis 4		
	DEC	HEX	DEC	HEX	DEC	HEX	DEC	HEX	
Basic Parameter	0	0	70	46	140	8C	210	D2	Speed limit (Low)
	1	1	71	47	141	8D	211	D3	Speed limit (High)
	2	2	72	48	142	8E	212	D4	Bias speed (Low)
	3	3	73	49	143	8F	213	D5	Bias speed (High)
	4	4	74	4A	144	90	214	D6	Acc. time1 (Low)
	5	5	75	4B	145	91	215	D7	Acc. time1 (High)
	6	6	76	4C	146	92	216	D8	Acc. time2 (Low)
	7	7	77	4D	147	93	217	D9	Acc. time2 (High)
	8	8	78	4E	148	94	218	DA	Acc. time3 (Low)
	9	9	79	4F	149	95	219	DB	Acc. time3 (High)
	10	A	80	50	150	96	220	DC	Acc. time4 (Low)
	11	B	81	51	151	97	221	DD	Acc. time4 (High)
	12	C	82	52	152	98	222	DE	Dec. time1 (Low)
	13	D	83	53	153	99	223	DF	Dec. time1 (High)
	14	E	84	54	154	9A	224	E0	Dec. time2 (Low)
	15	F	85	55	155	9B	225	E1	Dec. time2 (High)
	16	10	86	56	156	9C	226	E2	Dec. time3 (Low)
	17	11	87	57	157	9D	227	E3	Dec. time3 (High)
	18	12	88	58	158	9E	228	E4	Dec. time4 (Low)
	19	13	89	59	159	9F	229	E5	Dec. time4 (High)
	20	14	90	5A	160	A0	230	E6	Dec. time for EMG stop (Low)
	21	15	91	5B	161	A1	231	E7	Dec. time for EMG stop (High)
	22	16	92	5C	162	A2	232	E8	Pulse per rotation (Low)
	23	17	93	5D	163	A3	233	E9	Pulse per rotation (High)
	24	18	94	5E	164	A4	234	EA	Distance per rotation (Low)
	25	19	95	5F	165	A5	235	EB	Distance per rotation (High)
	26	1A	96	60	166	A6	236	EC	CONTROL WORD
	27	1B	97	61	167	A7	237	ED	-
Extended parameter	28	1C	98	62	168	A8	238	EE	S/W upper limit (Low)
	29	1D	99	63	169	A9	239	EF	S/W upper limit (High)
	30	1E	100	64	170	AA	240	F0	S/W lower limit (Low)
	31	1F	101	65	171	AB	241	F1	S/W lower limit (High)
	32	20	102	66	172	AC	242	F2	Backlash compensation
	33	21	103	67	173	AD	243	F3	Position completion time
	34	22	104	68	174	AE	244	F4	S-curve ratio
	35	23	105	69	175	AF	245	F5	-
	36	24	106	6A	176	B0	246	F6	-
	37	25	107	6B	177	B1	247	F7	-
	38	26	108	6C	178	B2	248	F8	Arc insertion position (Low)
	39	27	109	6D	179	B3	249	F9	Arc insertion position (High)
	40	28	110	6E	180	B4	250	FA	CONTROL WORD

	Axis 1		Axis 2		Axis 3		Axis 4		
	DEC	HEX	DEC	HEX	DEC	HEX	DEC	HEX	
Manual operation parameter	42	2A	112	70	182	B6	252	FC	JOG high speed (Low)
	43	2B	113	71	183	B7	253	FD	JOG high speed (High)
	44	2C	114	72	184	B8	254	FE	JOG low speed (Low)
	45	2D	115	73	185	B9	255	FF	JOG low speed (High)
	46	2E	116	74	186	BA	256	100	JOG acc. time (Low)
	47	2F	117	75	187	BB	257	101	JOG acc. time (High)
	48	30	118	76	188	BC	258	102	JOG dec. time (Low)
	49	31	119	77	189	BD	259	103	JOG dec. time (High)
	50	32	120	78	190	BE	260	104	Inching speed
	51	33	121	79	191	BF	261	105	-
Homing parameter	52	34	122	7A	192	C0	262	106	Home position (Low)
	53	35	123	7B	193	C1	263	107	Home position (High)
	54	36	124	7C	194	C2	264	108	Home high speed (Low)
	55	37	125	7D	195	C3	265	109	Home high speed (High)
	56	38	126	7E	196	C4	266	10A	Home low speed (Low)
	57	39	127	7F	197	C5	267	10B	Home low speed (High)
	58	3A	128	80	198	C6	268	10C	Home acc. time (Low)
	59	3B	129	81	199	C7	269	10D	Home acc. time (High)
	60	3C	130	82	200	C8	270	10E	Home dec. time (Low)
	61	3D	131	83	201	C9	271	10F	Home dec. time (High)
	62	3E	132	84	202	CA	272	110	Home compensation (Low)
	63	3F	133	85	203	CB	273	111	Home compensation (High)
	64	40	134	86	204	CC	274	112	Home restart time
	65	41	135	87	205	CD	275	113	Home dwell time
	66	42	136	88	206	CE	276	114	CONTROL WORD
	67	43	137	89	207	CF	277	115	-
I/O signal parameter	68	44	138	8A	208	D0	278	116	
	69	45	139	8B	209	D1	279	117	-
Common parameter	-						280	118	CONTROL WORD
							281	119	-
							282	11A	Encoder max. value (Low)
							283	11B	Encoder max. value (High)
							284	11C	Encoder min. value (Low)
							285	11D	Encoder min. value (High)
							286	11E	-
							287	11F	-
							288	120	-
							289	121	-

(1) Basic parameter Control Word

Bit position	Contents
Pulse output mode (bit 0 ~ 1)	0: CW/CCW
	1: PLS/DIR
	2: PHASE
Unit (bit 2 ~ 3)	0: pulse
	1: mm
	2: inch
	3: degree
Unit multiplier (bit 4 ~ 5)	0: x1
	1: x10
	2: x100
	3: x1000
Speed command unit (bit 6)	0:Unit/Time
	1:rpm

(2) Extended parameter Control Word

Bit position	Contents
Pulse output direction (bit 0)	0: CW, 1: CCW
Acc./Dec. pattern (bit 1)	0: Trapezoid, 1: S-curve
M code mode (bit 2 ~ 3)	0: None, 1: With, 2: After
Soft limit detect (bit 5)	0: Don’t detect, 1: Detect
External VTP (bit 6)	0: Disable, 1: Enable
External stop selection (bit 7)	0: EMG stop, 1: DEC stop
Position complete condition (bit 10 ~ 11)	0: Dwell, 1: In-position, 2: Dwell AND In-position, 3: Dwell OR In-position
Int. continuous opr. type (bit 13)	0: Pass target pos, 1: Pass near pos
Arc insertion (bit 14)	0: Don’t insert, 1: Insert arc cont.
Spd. Override with pos. coordi. (bit 15)	0: ABS, 1: INC

(3) Homing parameter Control Word

Bit position	Contents
Home method (bit 0 ~ 2)	0: DOG/HOME(OFF)
	1: DOG/HOME(ON)
	2: U.L. Limit/HOME
	3: DOG
	4: High speed
	5: Upper/lower limit
	6: Home
Home direction (bit 3)	0: CW
	1: CCW

(4) I/O signal parameter Control Word

Bit position and contents
bit0: upper limit signal bit1: lower limit signal bit2: DOG bit3: HOME
bit4: EMG signal, bit5: VTP signal bit6: Driver ready signal bit7: In-position signal
bit8: Deviation cnt. clear output

(5) Common parameter Control Word

Bit position	Contents
Enc pulse input (bit 0 ~ 2)	0: CW/CCW (x1)
	1: PULSE/DIR (x1)
	2: PULSE/DIR (x2)
	3: PHASE A/B (x1)
	4: PHASE A/B (x2)
	5: PHASE A/B (x3)
Speed override (bit 8)	0: Specify %
	1: Specify speed
Pulse output level (bit 15)	0: Low Active
	1: High Active

Appendix 3.2 Axis 1 operation data memory address

Step	Target position		Cir. int. auxiliary point		Operation speed		Dwell time	M code	Sub. Axis setting	Helical int.	Circular int. turns	Control word
	Low	High	Low	High	Low	High						
1	290	291	292	293	294	295	296	297	298	299	300	301
2	302	303	304	305	306	307	308	309	310	311	312	313
3	314	315	316	317	318	319	320	321	322	323	324	325
4	326	327	328	329	330	331	332	333	334	335	336	337
5	338	339	340	341	342	343	344	345	346	347	348	349
6	350	351	352	353	354	355	356	357	358	359	360	361
7	362	363	364	365	366	367	368	369	370	371	372	373
8	374	375	376	377	378	379	380	381	382	383	384	385
9	386	387	388	389	390	391	392	393	394	395	396	397
10	398	399	400	401	402	403	404	405	406	407	408	409
11	410	411	412	413	414	415	416	417	418	419	420	421
12	422	423	424	425	426	427	428	429	430	431	432	433
13	434	435	436	437	438	439	440	441	442	443	444	445
14	446	447	448	449	450	451	452	453	454	455	456	457
15	458	459	460	461	462	463	464	465	466	467	468	469
16	470	471	472	473	474	475	476	477	478	479	480	481
17	482	483	484	485	486	487	488	489	490	491	492	493
18	494	495	496	497	498	499	500	501	502	503	504	505
19	506	507	508	509	510	511	512	513	514	515	516	517
20	518	519	520	521	522	523	524	525	526	527	528	529
21	530	531	532	533	534	535	536	537	538	539	540	541
22	542	543	544	545	546	547	548	549	550	551	552	553
23	554	555	556	557	558	559	560	561	562	563	564	565
24	566	567	568	569	570	571	572	573	574	575	576	577
25	578	579	580	581	582	583	584	585	586	587	588	589
26	590	591	592	593	594	595	596	597	598	599	600	601
27	602	603	604	605	606	607	608	609	610	611	612	613
28	614	615	616	617	618	619	620	621	622	623	624	625
29	626	627	628	629	630	631	632	633	634	635	636	637
30	638	639	640	641	642	643	644	645	646	647	648	649
31	650	651	652	653	654	655	656	657	658	659	660	661
32	662	663	664	665	666	667	668	669	670	671	672	673
33	674	675	676	677	678	679	680	681	682	683	684	685
34	686	687	688	689	690	691	692	693	694	695	696	697
35	698	699	700	701	702	703	704	705	706	707	708	709
36	710	711	712	713	714	715	716	717	718	719	720	721
37	722	723	724	725	726	727	728	729	730	731	732	733
38	734	735	736	737	738	739	740	741	742	743	744	745
39	746	747	748	749	750	751	752	753	754	755	756	757
40	758	759	760	761	762	763	764	765	766	767	768	769
41	770	771	772	773	774	775	776	777	778	779	780	781
42	782	783	784	785	786	787	788	789	790	791	792	793
43	794	795	796	797	798	799	800	801	802	803	804	805
44	806	807	808	809	810	811	812	813	814	815	816	817
45	818	819	820	821	822	823	824	825	826	827	828	829
46	830	831	832	833	834	835	836	837	838	839	840	841
47	842	843	844	845	846	847	848	849	850	851	852	853
48	854	855	856	857	858	859	860	861	862	863	864	865
49	866	867	868	869	870	871	872	873	874	875	876	877
50	878	879	880	881	882	883	884	885	886	887	888	889

Module Internal Memory Address of “Read/Write Variable Data” command

Step	Target position		Cir. int. auxiliary point		Operation speed		Dwell time	M code	Sub. Axis setting	Helical int.	Circular int. turns	Control word
	Low	High	Low	High	Low	High						
51	890	891	892	893	894	895	896	897	898	899	900	901
52	902	903	904	905	906	907	908	909	910	911	912	913
53	914	915	916	917	918	919	920	921	922	923	924	925
54	926	927	928	929	930	931	932	933	934	935	936	937
55	938	939	940	941	942	943	944	945	946	947	948	949
56	950	951	952	953	954	955	956	957	958	959	960	961
57	962	963	964	965	966	967	968	969	970	971	972	973
58	974	975	976	977	978	979	980	981	982	983	984	985
59	986	987	988	989	990	991	992	993	994	995	996	997
60	998	999	1000	1001	1002	1003	1004	1005	1006	1007	1008	1009
61	1010	1011	1012	1013	1014	1015	1016	1017	1018	1019	1020	1021
62	1022	1023	1024	1025	1026	1027	1028	1029	1030	1031	1032	1033
63	1034	1035	1036	1037	1038	1039	1040	1041	1042	1043	1044	1045
64	1046	1047	1048	1049	1050	1051	1052	1053	1054	1055	1056	1057
65	1058	1059	1060	1061	1062	1063	1064	1065	1066	1067	1068	1069
66	1070	1071	1072	1073	1074	1075	1076	1077	1078	1079	1080	1081
67	1082	1083	1084	1085	1086	1087	1088	1089	1090	1091	1092	1093
68	1094	1095	1096	1097	1098	1099	1100	1101	1102	1103	1104	1105
69	1106	1107	1108	1109	1110	1111	1112	1113	1114	1115	1116	1117
70	1118	1119	1120	1121	1122	1123	1124	1125	1126	1127	1128	1129
71	1130	1131	1132	1133	1134	1135	1136	1137	1138	1139	1140	1141
72	1142	1143	1144	1145	1146	1147	1148	1149	1150	1151	1152	1153
73	1154	1155	1156	1157	1158	1159	1160	1161	1162	1163	1164	1165
74	1166	1167	1168	1169	1170	1171	1172	1173	1174	1175	1176	1177
75	1178	1179	1180	1181	1182	1183	1184	1185	1186	1187	1188	1189
76	1190	1191	1192	1193	1194	1195	1196	1197	1198	1199	1200	1201
77	1202	1203	1204	1205	1206	1207	1208	1209	1210	1211	1212	1213
78	1214	1215	1216	1217	1218	1219	1220	1221	1222	1223	1224	1225
79	1226	1227	1228	1229	1230	1231	1232	1233	1234	1235	1236	1237
80	1238	1239	1240	1241	1242	1243	1244	1245	1246	1247	1248	1249
81	1250	1251	1252	1253	1254	1255	1256	1257	1258	1259	1260	1261
82	1262	1263	1264	1265	1266	1267	1268	1269	1270	1271	1272	1273
83	1274	1275	1276	1277	1278	1279	1280	1281	1282	1283	1284	1285
84	1286	1287	1288	1289	1290	1291	1292	1293	1294	1295	1296	1297
85	1298	1299	1300	1301	1302	1303	1304	1305	1306	1307	1308	1309
86	1310	1311	1312	1313	1314	1315	1316	1317	1318	1319	1320	1321
87	1322	1323	1324	1325	1326	1327	1328	1329	1330	1331	1332	1333
88	1334	1335	1336	1337	1338	1339	1340	1341	1342	1343	1344	1345
89	1346	1347	1348	1349	1350	1351	1352	1353	1354	1355	1356	1357
90	1358	1359	1360	1361	1362	1363	1364	1365	1366	1367	1368	1369
91	1370	1371	1372	1373	1374	1375	1376	1377	1378	1379	1380	1381
92	1382	1383	1384	1385	1386	1387	1388	1389	1390	1391	1392	1393
93	1394	1395	1396	1397	1398	1399	1400	1401	1402	1403	1404	1405
94	1406	1407	1408	1409	1410	1411	1412	1413	1414	1415	1416	1417
95	1418	1419	1420	1421	1422	1423	1424	1425	1426	1427	1428	1429
96	1430	1431	1432	1433	1434	1435	1436	1437	1438	1439	1440	1441
97	1442	1443	1444	1445	1446	1447	1448	1449	1450	1451	1452	1453
98	1454	1455	1456	1457	1458	1459	1460	1461	1462	1463	1464	1465
99	1466	1467	1468	1469	1470	1471	1472	1473	1474	1475	1476	1477
100	1478	1479	1480	1481	1482	1483	1484	1485	1486	1487	1488	1489

Step	Target position		Cir. int. auxiliary point		Operation speed		Dwell time	M code	Sub. Axis setting	Helical int.	Circular int. turns	Control word
	Low	High	Low	High	Low	High						
101	1490	1491	1492	1493	1494	1495	1496	1497	1498	1499	1500	1501
102	1502	1503	1504	1505	1506	1507	1508	1509	1510	1511	1512	1513
103	1514	1515	1516	1517	1518	1519	1520	1521	1522	1523	1524	1525
104	1526	1527	1528	1529	1530	1531	1532	1533	1534	1535	1536	1537
105	1538	1539	1540	1541	1542	1543	1544	1545	1546	1547	1548	1549
106	1550	1551	1552	1553	1554	1555	1556	1557	1558	1559	1560	1561
107	1562	1563	1564	1565	1566	1567	1568	1569	1570	1571	1572	1573
108	1574	1575	1576	1577	1578	1579	1580	1581	1582	1583	1584	1585
109	1586	1587	1588	1589	1590	1591	1592	1593	1594	1595	1596	1597
110	1598	1599	1600	1601	1602	1603	1604	1605	1606	1607	1608	1609
111	1610	1611	1612	1613	1614	1615	1616	1617	1618	1619	1620	1621
112	1622	1623	1624	1625	1626	1627	1628	1629	1630	1631	1632	1633
113	1634	1635	1636	1637	1638	1639	1640	1641	1642	1643	1644	1645
114	1646	1647	1648	1649	1650	1651	1652	1653	1654	1655	1656	1657
115	1658	1659	1660	1661	1662	1663	1664	1665	1666	1667	1668	1669
116	1670	1671	1672	1673	1674	1675	1676	1677	1678	1679	1680	1681
117	1682	1683	1684	1685	1686	1687	1688	1689	1690	1691	1692	1693
118	1694	1695	1696	1697	1698	1699	1700	1701	1702	1703	1704	1705
119	1706	1707	1708	1709	1710	1711	1712	1713	1714	1715	1716	1717
120	1718	1719	1720	1721	1722	1723	1724	1725	1726	1727	1728	1729
121	1730	1731	1732	1733	1734	1735	1736	1737	1738	1739	1740	1741
122	1742	1743	1744	1745	1746	1747	1748	1749	1750	1751	1752	1753
123	1754	1755	1756	1757	1758	1759	1760	1761	1762	1763	1764	1765
124	1766	1767	1768	1769	1770	1771	1772	1773	1774	1775	1776	1777
125	1778	1779	1780	1781	1782	1783	1784	1785	1786	1787	1788	1789
126	1790	1791	1792	1793	1794	1795	1796	1797	1798	1799	1800	1801
127	1802	1803	1804	1805	1806	1807	1808	1809	1810	1811	1812	1813
128	1814	1815	1816	1817	1818	1819	1820	1821	1822	1823	1824	1825
129	1826	1827	1828	1829	1830	1831	1832	1833	1834	1835	1836	1837
130	1838	1839	1840	1841	1842	1843	1844	1845	1846	1847	1848	1849
131	1850	1851	1852	1853	1854	1855	1856	1857	1858	1859	1860	1861
132	1862	1863	1864	1865	1866	1867	1868	1869	1870	1871	1872	1873
133	1874	1875	1876	1877	1878	1879	1880	1881	1882	1883	1884	1885
134	1886	1887	1888	1889	1890	1891	1892	1893	1894	1895	1896	1897
135	1898	1899	1900	1901	1902	1903	1904	1905	1906	1907	1908	1909
136	1910	1911	1912	1913	1914	1915	1916	1917	1918	1919	1920	1921
137	1922	1923	1924	1925	1926	1927	1928	1929	1930	1931	1932	1933
138	1934	1935	1936	1937	1938	1939	1940	1941	1942	1943	1944	1945
139	1946	1947	1948	1949	1950	1951	1952	1953	1954	1955	1956	1957
140	1958	1959	1960	1961	1962	1963	1964	1965	1966	1967	1968	1969
141	1970	1971	1972	1973	1974	1975	1976	1977	1978	1979	1980	1981
142	1982	1983	1984	1985	1986	1987	1988	1989	1990	1991	1992	1993
143	1994	1995	1996	1997	1998	1999	2000	2001	2002	2003	2004	2005
144	2006	2007	2008	2009	2010	2011	2012	2013	2014	2015	2016	2017
145	2018	2019	2020	2021	2022	2023	2024	2025	2026	2027	2028	2029
146	2030	2031	2032	2033	2034	2035	2036	2037	2038	2039	2040	2041
147	2042	2043	2044	2045	2046	2047	2048	2049	2050	2051	2052	2053
148	2054	2055	2056	2057	2058	2059	2060	2061	2062	2063	2064	2065
149	2066	2067	2068	2069	2070	2071	2072	2073	2074	2075	2076	2077
150	2078	2079	2080	2081	2082	2083	2084	2085	2086	2087	2088	2089

Step	Target position		Cir. int. auxiliary point		Operation speed		Dwell time	M code	Sub. Axis setting	Helical int.	Circular int. turns	Control word
	Low	High	Low	High	Low	High						
151	2090	2091	2092	2093	2094	2095	2096	2097	2098	2099	2100	2101
152	2102	2103	2104	2105	2106	2107	2108	2109	2110	2111	2112	2113
153	2114	2115	2116	2117	2118	2119	2120	2121	2122	2123	2124	2125
154	2126	2127	2128	2129	2130	2131	2132	2133	2134	2135	2136	2137
155	2138	2139	2140	2141	2142	2143	2144	2145	2146	2147	2148	2149
156	2150	2151	2152	2153	2154	2155	2156	2157	2158	2159	2160	2161
157	2162	2163	2164	2165	2166	2167	2168	2169	2170	2171	2172	2173
158	2174	2175	2176	2177	2178	2179	2180	2181	2182	2183	2184	2185
159	2186	2187	2188	2189	2190	2191	2192	2193	2194	2195	2196	2197
160	2198	2199	2200	2201	2202	2203	2204	2205	2206	2207	2208	2209
161	2210	2211	2212	2213	2214	2215	2216	2217	2218	2219	2220	2221
162	2222	2223	2224	2225	2226	2227	2228	2229	2230	2231	2232	2233
163	2234	2235	2236	2237	2238	2239	2240	2241	2242	2243	2244	2245
164	2246	2247	2248	2249	2250	2251	2252	2253	2254	2255	2256	2257
165	2258	2259	2260	2261	2262	2263	2264	2265	2266	2267	2268	2269
166	2270	2271	2272	2273	2274	2275	2276	2277	2278	2279	2280	2281
167	2282	2283	2284	2285	2286	2287	2288	2289	2290	2291	2292	2293
168	2294	2295	2296	2297	2298	2299	2300	2301	2302	2303	2304	2305
169	2306	2307	2308	2309	2310	2311	2312	2313	2314	2315	2316	2317
170	2318	2319	2320	2321	2322	2323	2324	2325	2326	2327	2328	2329
171	2330	2331	2332	2333	2334	2335	2336	2337	2338	2339	2340	2341
172	2342	2343	2344	2345	2346	2347	2348	2349	2350	2351	2352	2353
173	2354	2355	2356	2357	2358	2359	2360	2361	2362	2363	2364	2365
174	2366	2367	2368	2369	2370	2371	2372	2373	2374	2375	2376	2377
175	2378	2379	2380	2381	2382	2383	2384	2385	2386	2387	2388	2389
176	2390	2391	2392	2393	2394	2395	2396	2397	2398	2399	2400	2401
177	2402	2403	2404	2405	2406	2407	2408	2409	2410	2411	2412	2413
178	2414	2415	2416	2417	2418	2419	2420	2421	2422	2423	2424	2425
179	2426	2427	2428	2429	2430	2431	2432	2433	2434	2435	2436	2437
180	2438	2439	2440	2441	2442	2443	2444	2445	2446	2447	2448	2449
181	2450	2451	2452	2453	2454	2455	2456	2457	2458	2459	2460	2461
182	2462	2463	2464	2465	2466	2467	2468	2469	2470	2471	2472	2473
183	2474	2475	2476	2477	2478	2479	2480	2481	2482	2483	2484	2485
184	2486	2487	2488	2489	2490	2491	2492	2493	2494	2495	2496	2497
185	2498	2499	2500	2501	2502	2503	2504	2505	2506	2507	2508	2509
186	2510	2511	2512	2513	2514	2515	2516	2517	2518	2519	2520	2521
187	2522	2523	2524	2525	2526	2527	2528	2529	2530	2531	2532	2533
188	2534	2535	2536	2537	2538	2539	2540	2541	2542	2543	2544	2545
189	2546	2547	2548	2549	2550	2551	2552	2553	2554	2555	2556	2557
190	2558	2559	2560	2561	2562	2563	2564	2565	2566	2567	2568	2569
191	2570	2571	2572	2573	2574	2575	2576	2577	2578	2579	2580	2581
192	2582	2583	2584	2585	2586	2587	2588	2589	2590	2591	2592	2593
193	2594	2595	2596	2597	2598	2599	2600	2601	2602	2603	2604	2605
194	2606	2607	2608	2609	2610	2611	2612	2613	2614	2615	2616	2617
195	2618	2619	2620	2621	2622	2623	2624	2625	2626	2627	2628	2629
196	2630	2631	2632	2633	2634	2635	2636	2637	2638	2639	2640	2641
197	2642	2643	2644	2645	2646	2647	2648	2649	2650	2651	2652	2653
198	2654	2655	2656	2657	2658	2659	2660	2661	2662	2663	2664	2665
199	2666	2667	2668	2669	2670	2671	2672	2673	2674	2675	2676	2677
200	2678	2679	2680	2681	2682	2683	2684	2685	2686	2687	2688	2689

Step	Target position		Cir. int. auxiliary point		Operation speed		Dwell time	M code	Sub. Axis setting	Helical int.	Circular int. turns	Control word
	Low	High	Low	High	Low	High						
201	2690	2691	2692	2693	2694	2695	2696	2697	2698	2699	2700	2701
202	2702	2703	2704	2705	2706	2707	2708	2709	2710	2711	2712	2713
203	2714	2715	2716	2717	2718	2719	2720	2721	2722	2723	2724	2725
204	2726	2727	2728	2729	2730	2731	2732	2733	2734	2735	2736	2737
205	2738	2739	2740	2741	2742	2743	2744	2745	2746	2747	2748	2749
206	2750	2751	2752	2753	2754	2755	2756	2757	2758	2759	2760	2761
207	2762	2763	2764	2765	2766	2767	2768	2769	2770	2771	2772	2773
208	2774	2775	2776	2777	2778	2779	2780	2781	2782	2783	2784	2785
209	2786	2787	2788	2789	2790	2791	2792	2793	2794	2795	2796	2797
210	2798	2799	2800	2801	2802	2803	2804	2805	2806	2807	2808	2809
211	2810	2811	2812	2813	2814	2815	2816	2817	2818	2819	2820	2821
212	2822	2823	2824	2825	2826	2827	2828	2829	2830	2831	2832	2833
213	2834	2835	2836	2837	2838	2839	2840	2841	2842	2843	2844	2845
214	2846	2847	2848	2849	2850	2851	2852	2853	2854	2855	2856	2857
215	2858	2859	2860	2861	2862	2863	2864	2865	2866	2867	2868	2869
216	2870	2871	2872	2873	2874	2875	2876	2877	2878	2879	2880	2881
217	2882	2883	2884	2885	2886	2887	2888	2889	2890	2891	2892	2893
218	2894	2895	2896	2897	2898	2899	2900	2901	2902	2903	2904	2905
219	2906	2907	2908	2909	2910	2911	2912	2913	2914	2915	2916	2917
220	2918	2919	2920	2921	2922	2923	2924	2925	2926	2927	2928	2929
221	2930	2931	2932	2933	2934	2935	2936	2937	2938	2939	2940	2941
222	2942	2943	2944	2945	2946	2947	2948	2949	2950	2951	2952	2953
223	2954	2955	2956	2957	2958	2959	2960	2961	2962	2963	2964	2965
224	2966	2967	2968	2969	2970	2971	2972	2973	2974	2975	2976	2977
225	2978	2979	2980	2981	2982	2983	2984	2985	2986	2987	2988	2989
226	2990	2991	2992	2993	2994	2995	2996	2997	2998	2999	3000	3001
227	3002	3003	3004	3005	3006	3007	3008	3009	3010	3011	3012	3013
228	3014	3015	3016	3017	3018	3019	3020	3021	3022	3023	3024	3025
229	3026	3027	3028	3029	3030	3031	3032	3033	3034	3035	3036	3037
230	3038	3039	3040	3041	3042	3043	3044	3045	3046	3047	3048	3049
231	3050	3051	3052	3053	3054	3055	3056	3057	3058	3059	3060	3061
232	3062	3063	3064	3065	3066	3067	3068	3069	3070	3071	3072	3073
233	3074	3075	3076	3077	3078	3079	3080	3081	3082	3083	3084	3085
234	3086	3087	3088	3089	3090	3091	3092	3093	3094	3095	3096	3097
235	3098	3099	3100	3101	3102	3103	3104	3105	3106	3107	3108	3109
236	3110	3111	3112	3113	3114	3115	3116	3117	3118	3119	3120	3121
237	3122	3123	3124	3125	3126	3127	3128	3129	3130	3131	3132	3133
238	3134	3135	3136	3137	3138	3139	3140	3141	3142	3143	3144	3145
239	3146	3147	3148	3149	3150	3151	3152	3153	3154	3155	3156	3157
240	3158	3159	3160	3161	3162	3163	3164	3165	3166	3167	3168	3169
241	3170	3171	3172	3173	3174	3175	3176	3177	3178	3179	3180	3181
242	3182	3183	3184	3185	3186	3187	3188	3189	3190	3191	3192	3193
243	3194	3195	3196	3197	3198	3199	3200	3201	3202	3203	3204	3205
244	3206	3207	3208	3209	3210	3211	3212	3213	3214	3215	3216	3217
245	3218	3219	3220	3221	3222	3223	3224	3225	3226	3227	3228	3229
246	3230	3231	3232	3233	3234	3235	3236	3237	3238	3239	3240	3241
247	3242	3243	3244	3245	3246	3247	3248	3249	3250	3251	3252	3253
248	3254	3255	3256	3257	3258	3259	3260	3261	3262	3263	3264	3265
249	3266	3267	3268	3269	3270	3271	3272	3273	3274	3275	3276	3277
250	3278	3279	3280	3281	3282	3283	3284	3285	3286	3287	3288	3289

Step	Target position		Cir. int. auxiliary point		Operation speed		Dwell time	M code	Sub. Axis setting	Helical int.	Circular int. turns	Control word
	Low	High	Low	High	Low	High						
251	3290	3291	3292	3293	3294	3295	3296	3297	3298	3299	3300	3301
252	3302	3303	3304	3305	3306	3307	3308	3309	3310	3311	3312	3313
253	3314	3315	3316	3317	3318	3319	3320	3321	3322	3323	3324	3325
254	3326	3327	3328	3329	3330	3331	3332	3333	3334	3335	3336	3337
255	3338	3339	3340	3341	3342	3343	3344	3345	3346	3347	3348	3349
256	3350	3351	3352	3353	3354	3355	3356	3357	3358	3359	3360	3361
257	3362	3363	3364	3365	3366	3367	3368	3369	3370	3371	3372	3373
258	3374	3375	3376	3377	3378	3379	3380	3381	3382	3383	3384	3385
259	3386	3387	3388	3389	3390	3391	3392	3393	3394	3395	3396	3397
260	3398	3399	3400	3401	3402	3403	3404	3405	3406	3407	3408	3409
261	3410	3411	3412	3413	3414	3415	3416	3417	3418	3419	3420	3421
262	3422	3423	3424	3425	3426	3427	3428	3429	3430	3431	3432	3433
263	3434	3435	3436	3437	3438	3439	3440	3441	3442	3443	3444	3445
264	3446	3447	3448	3449	3450	3451	3452	3453	3454	3455	3456	3457
265	3458	3459	3460	3461	3462	3463	3464	3465	3466	3467	3468	3469
266	3470	3471	3472	3473	3474	3475	3476	3477	3478	3479	3480	3481
267	3482	3483	3484	3485	3486	3487	3488	3489	3490	3491	3492	3493
268	3494	3495	3496	3497	3498	3499	3500	3501	3502	3503	3504	3505
269	3506	3507	3508	3509	3510	3511	3512	3513	3514	3515	3516	3517
270	3518	3519	3520	3521	3522	3523	3524	3525	3526	3527	3528	3529
271	3530	3531	3532	3533	3534	3535	3536	3537	3538	3539	3540	3541
272	3542	3543	3544	3545	3546	3547	3548	3549	3550	3551	3552	3553
273	3554	3555	3556	3557	3558	3559	3560	3561	3562	3563	3564	3565
274	3566	3567	3568	3569	3570	3571	3572	3573	3574	3575	3576	3577
275	3578	3579	3580	3581	3582	3583	3584	3585	3586	3587	3588	3589
276	3590	3591	3592	3593	3594	3595	3596	3597	3598	3599	3600	3601
277	3602	3603	3604	3605	3606	3607	3608	3609	3610	3611	3612	3613
278	3614	3615	3616	3617	3618	3619	3620	3621	3622	3623	3624	3625
279	3626	3627	3628	3629	3630	3631	3632	3633	3634	3635	3636	3637
280	3638	3639	3640	3641	3642	3643	3644	3645	3646	3647	3648	3649
281	3650	3651	3652	3653	3654	3655	3656	3657	3658	3659	3660	3661
282	3662	3663	3664	3665	3666	3667	3668	3669	3670	3671	3672	3673
283	3674	3675	3676	3677	3678	3679	3680	3681	3682	3683	3684	3685
284	3686	3687	3688	3689	3690	3691	3692	3693	3694	3695	3696	3697
285	3698	3699	3700	3701	3702	3703	3704	3705	3706	3707	3708	3709
286	3710	3711	3712	3713	3714	3715	3716	3717	3718	3719	3720	3721
287	3722	3723	3724	3725	3726	3727	3728	3729	3730	3731	3732	3733
288	3734	3735	3736	3737	3738	3739	3740	3741	3742	3743	3744	3745
289	3746	3747	3748	3749	3750	3751	3752	3753	3754	3755	3756	3757
290	3758	3759	3760	3761	3762	3763	3764	3765	3766	3767	3768	3769
291	3770	3771	3772	3773	3774	3775	3776	3777	3778	3779	3780	3781
292	3782	3783	3784	3785	3786	3787	3788	3789	3790	3791	3792	3793
293	3794	3795	3796	3797	3798	3799	3800	3801	3802	3803	3804	3805
294	3806	3807	3808	3809	3810	3811	3812	3813	3814	3815	3816	3817
295	3818	3819	3820	3821	3822	3823	3824	3825	3826	3827	3828	3829
296	3830	3831	3832	3833	3834	3835	3836	3837	3838	3839	3840	3841
297	3842	3843	3844	3845	3846	3847	3848	3849	3850	3851	3852	3853
298	3854	3855	3856	3857	3858	3859	3860	3861	3862	3863	3864	3865
299	3866	3867	3868	3869	3870	3871	3872	3873	3874	3875	3876	3877
300	3878	3879	3880	3881	3882	3883	3884	3885	3886	3887	3888	3889

Step	Target position		Cir. int. auxiliary point		Operation speed		Dwell time	M code	Sub. Axis setting	Helical int.	Circular int. turns	Control word
	Low	High	Low	High	Low	High						
301	3890	3891	3892	3893	3894	3895	3896	3897	3898	3899	3900	3901
302	3902	3903	3904	3905	3906	3907	3908	3909	3910	3911	3912	3913
303	3914	3915	3916	3917	3918	3919	3920	3921	3922	3923	3924	3925
304	3926	3927	3928	3929	3930	3931	3932	3933	3934	3935	3936	3937
305	3938	3939	3940	3941	3942	3943	3944	3945	3946	3947	3948	3949
306	3950	3951	3952	3953	3954	3955	3956	3957	3958	3959	3960	3961
307	3962	3963	3964	3965	3966	3967	3968	3969	3970	3971	3972	3973
308	3974	3975	3976	3977	3978	3979	3980	3981	3982	3983	3984	3985
309	3986	3987	3988	3989	3990	3991	3992	3993	3994	3995	3996	3997
310	3998	3999	4000	4001	4002	4003	4004	4005	4006	4007	4008	4009
311	4010	4011	4012	4013	4014	4015	4016	4017	4018	4019	4020	4021
312	4022	4023	4024	4025	4026	4027	4028	4029	4030	4031	4032	4033
313	4034	4035	4036	4037	4038	4039	4040	4041	4042	4043	4044	4045
314	4046	4047	4048	4049	4050	4051	4052	4053	4054	4055	4056	4057
315	4058	4059	4060	4061	4062	4063	4064	4065	4066	4067	4068	4069
316	4070	4071	4072	4073	4074	4075	4076	4077	4078	4079	4080	4081
317	4082	4083	4084	4085	4086	4087	4088	4089	4090	4091	4092	4093
318	4094	4095	4096	4097	4098	4099	4100	4101	4102	4103	4104	4105
319	4106	4107	4108	4109	4110	4111	4112	4113	4114	4115	4116	4117
320	4118	4119	4120	4121	4122	4123	4124	4125	4126	4127	4128	4129
321	4130	4131	4132	4133	4134	4135	4136	4137	4138	4139	4140	4141
322	4142	4143	4144	4145	4146	4147	4148	4149	4150	4151	4152	4153
323	4154	4155	4156	4157	4158	4159	4160	4161	4162	4163	4164	4165
324	4166	4167	4168	4169	4170	4171	4172	4173	4174	4175	4176	4177
325	4178	4179	4180	4181	4182	4183	4184	4185	4186	4187	4188	4189
326	4190	4191	4192	4193	4194	4195	4196	4197	4198	4199	4200	4201
327	4202	4203	4204	4205	4206	4207	4208	4209	4210	4211	4212	4213
328	4214	4215	4216	4217	4218	4219	4220	4221	4222	4223	4224	4225
329	4226	4227	4228	4229	4230	4231	4232	4233	4234	4235	4236	4237
330	4238	4239	4240	4241	4242	4243	4244	4245	4246	4247	4248	4249
331	4250	4251	4252	4253	4254	4255	4256	4257	4258	4259	4260	4261
332	4262	4263	4264	4265	4266	4267	4268	4269	4270	4271	4272	4273
333	4274	4275	4276	4277	4278	4279	4280	4281	4282	4283	4284	4285
334	4286	4287	4288	4289	4290	4291	4292	4293	4294	4295	4296	4297
335	4298	4299	4300	4301	4302	4303	4304	4305	4306	4307	4308	4309
336	4310	4311	4312	4313	4314	4315	4316	4317	4318	4319	4320	4321
337	4322	4323	4324	4325	4326	4327	4328	4329	4330	4331	4332	4333
338	4334	4335	4336	4337	4338	4339	4340	4341	4342	4343	4344	4345
339	4346	4347	4348	4349	4350	4351	4352	4353	4354	4355	4356	4357
340	4358	4359	4360	4361	4362	4363	4364	4365	4366	4367	4368	4369
341	4370	4371	4372	4373	4374	4375	4376	4377	4378	4379	4380	4381
342	4382	4383	4384	4385	4386	4387	4388	4389	4390	4391	4392	4393
343	4394	4395	4396	4397	4398	4399	4400	4401	4402	4403	4404	4405
344	4406	4407	4408	4409	4410	4411	4412	4413	4414	4415	4416	4417
345	4418	4419	4420	4421	4422	4423	4424	4425	4426	4427	4428	4429
346	4430	4431	4432	4433	4434	4435	4436	4437	4438	4439	4440	4441
347	4442	4443	4444	4445	4446	4447	4448	4449	4450	4451	4452	4453
348	4454	4455	4456	4457	4458	4459	4460	4461	4462	4463	4464	4465
349	4466	4467	4468	4469	4470	4471	4472	4473	4474	4475	4476	4477
350	4478	4479	4480	4481	4482	4483	4484	4485	4486	4487	4488	4489

Module Internal Memory Address of “Read/Write Variable Data” command

Step	Target position		Cir. int. auxiliary point		Operation speed		Dwell time	M code	Sub. Axis setting	Helical int.	Circular int. turns	Control word
	Low	High	Low	High	Low	High						
351	4490	4491	4492	4493	4494	4495	4496	4497	4498	4499	4500	4501
352	4502	4503	4504	4505	4506	4507	4508	4509	4510	4511	4512	4513
353	4514	4515	4516	4517	4518	4519	4520	4521	4522	4523	4524	4525
354	4526	4527	4528	4529	4530	4531	4532	4533	4534	4535	4536	4537
355	4538	4539	4540	4541	4542	4543	4544	4545	4546	4547	4548	4549
356	4550	4551	4552	4553	4554	4555	4556	4557	4558	4559	4560	4561
357	4562	4563	4564	4565	4566	4567	4568	4569	4570	4571	4572	4573
358	4574	4575	4576	4577	4578	4579	4580	4581	4582	4583	4584	4585
359	4586	4587	4588	4589	4590	4591	4592	4593	4594	4595	4596	4597
360	4598	4599	4600	4601	4602	4603	4604	4605	4606	4607	4608	4609
361	4610	4611	4612	4613	4614	4615	4616	4617	4618	4619	4620	4621
362	4622	4623	4624	4625	4626	4627	4628	4629	4630	4631	4632	4633
363	4634	4635	4636	4637	4638	4639	4640	4641	4642	4643	4644	4645
364	4646	4647	4648	4649	4650	4651	4652	4653	4654	4655	4656	4657
365	4658	4659	4660	4661	4662	4663	4664	4665	4666	4667	4668	4669
366	4670	4671	4672	4673	4674	4675	4676	4677	4678	4679	4680	4681
367	4682	4683	4684	4685	4686	4687	4688	4689	4690	4691	4692	4693
368	4694	4695	4696	4697	4698	4699	4700	4701	4702	4703	4704	4705
369	4706	4707	4708	4709	4710	4711	4712	4713	4714	4715	4716	4717
370	4718	4719	4720	4721	4722	4723	4724	4725	4726	4727	4728	4729
371	4730	4731	4732	4733	4734	4735	4736	4737	4738	4739	4740	4741
372	4742	4743	4744	4745	4746	4747	4748	4749	4750	4751	4752	4753
373	4754	4755	4756	4757	4758	4759	4760	4761	4762	4763	4764	4765
374	4766	4767	4768	4769	4770	4771	4772	4773	4774	4775	4776	4777
375	4778	4779	4780	4781	4782	4783	4784	4785	4786	4787	4788	4789
376	4790	4791	4792	4793	4794	4795	4796	4797	4798	4799	4800	4801
377	4802	4803	4804	4805	4806	4807	4808	4809	4810	4811	4812	4813
378	4814	4815	4816	4817	4818	4819	4820	4821	4822	4823	4824	4825
379	4826	4827	4828	4829	4830	4831	4832	4833	4834	4835	4836	4837
380	4838	4839	4840	4841	4842	4843	4844	4845	4846	4847	4848	4849
381	4850	4851	4852	4853	4854	4855	4856	4857	4858	4859	4860	4861
382	4862	4863	4864	4865	4866	4867	4868	4869	4870	4871	4872	4873
383	4874	4875	4876	4877	4878	4879	4880	4881	4882	4883	4884	4885
384	4886	4887	4888	4889	4890	4891	4892	4893	4894	4895	4896	4897
385	4898	4899	4900	4901	4902	4903	4904	4905	4906	4907	4908	4909
386	4910	4911	4912	4913	4914	4915	4916	4917	4918	4919	4920	4921
387	4922	4923	4924	4925	4926	4927	4928	4929	4930	4931	4932	4933
388	4934	4935	4936	4937	4938	4939	4940	4941	4942	4943	4944	4945
389	4946	4947	4948	4949	4950	4951	4952	4953	4954	4955	4956	4957
390	4958	4959	4960	4961	4962	4963	4964	4965	4966	4967	4968	4969
391	4970	4971	4972	4973	4974	4975	4976	4977	4978	4979	4980	4981
392	4982	4983	4984	4985	4986	4987	4988	4989	4990	4991	4992	4993
393	4994	4995	4996	4997	4998	4999	5000	5001	5002	5003	5004	5005
394	5006	5007	5008	5009	5010	5011	5012	5013	5014	5015	5016	5017
395	5018	5019	5020	5021	5022	5023	5024	5025	5026	5027	5028	5029
396	5030	5031	5032	5033	5034	5035	5036	5037	5038	5039	5040	5041
397	5042	5043	5044	5045	5046	5047	5048	5049	5050	5051	5052	5053
398	5054	5055	5056	5057	5058	5059	5060	5061	5062	5063	5064	5065
399	5066	5067	5068	5069	5070	5071	5072	5073	5074	5075	5076	5077
400	5078	5079	5080	5081	5082	5083	5084	5085	5086	5087	5088	5089

Appendix 3.3 Axis 2 operation data memory address

Step	Target position		Cir. int. auxiliary point		Operation speed		Dwell time	M code	Sub. Axis setting	Helical int.	Circular int. turns	Control word
	Low	High	Low	High	Low	High						
1	5090	5091	5092	5093	5094	5095	5096	5097	5098	5099	5100	5101
2	5102	5103	5104	5105	5106	5107	5108	5109	5110	5111	5112	5113
3	5114	5115	5116	5117	5118	5119	5120	5121	5122	5123	5124	5125
4	5126	5127	5128	5129	5130	5131	5132	5133	5134	5135	5136	5137
5	5138	5139	5140	5141	5142	5143	5144	5145	5146	5147	5148	5149
6	5150	5151	5152	5153	5154	5155	5156	5157	5158	5159	5160	5161
7	5162	5163	5164	5165	5166	5167	5168	5169	5170	5171	5172	5173
8	5174	5175	5176	5177	5178	5179	5180	5181	5182	5183	5184	5185
9	5186	5187	5188	5189	5190	5191	5192	5193	5194	5195	5196	5197
10	5198	5199	5200	5201	5202	5203	5204	5205	5206	5207	5208	5209
11	5210	5211	5212	5213	5214	5215	5216	5217	5218	5219	5220	5221
12	5222	5223	5224	5225	5226	5227	5228	5229	5230	5231	5232	5233
13	5234	5235	5236	5237	5238	5239	5240	5241	5242	5243	5244	5245
14	5246	5247	5248	5249	5250	5251	5252	5253	5254	5255	5256	5257
15	5258	5259	5260	5261	5262	5263	5264	5265	5266	5267	5268	5269
16	5270	5271	5272	5273	5274	5275	5276	5277	5278	5279	5280	5281
17	5282	5283	5284	5285	5286	5287	5288	5289	5290	5291	5292	5293
18	5294	5295	5296	5297	5298	5299	5300	5301	5302	5303	5304	5305
19	5306	5307	5308	5309	5310	5311	5312	5313	5314	5315	5316	5317
20	5318	5319	5320	5321	5322	5323	5324	5325	5326	5327	5328	5329
21	5330	5331	5332	5333	5334	5335	5336	5337	5338	5339	5340	5341
22	5342	5343	5344	5345	5346	5347	5348	5349	5350	5351	5352	5353
23	5354	5355	5356	5357	5358	5359	5360	5361	5362	5363	5364	5365
24	5366	5367	5368	5369	5370	5371	5372	5373	5374	5375	5376	5377
25	5378	5379	5380	5381	5382	5383	5384	5385	5386	5387	5388	5389
26	5390	5391	5392	5393	5394	5395	5396	5397	5398	5399	5400	5401
27	5402	5403	5404	5405	5406	5407	5408	5409	5410	5411	5412	5413
28	5414	5415	5416	5417	5418	5419	5420	5421	5422	5423	5424	5425
29	5426	5427	5428	5429	5430	5431	5432	5433	5434	5435	5436	5437
30	5438	5439	5440	5441	5442	5443	5444	5445	5446	5447	5448	5449
31	5450	5451	5452	5453	5454	5455	5456	5457	5458	5459	5460	5461
32	5462	5463	5464	5465	5466	5467	5468	5469	5470	5471	5472	5473
33	5474	5475	5476	5477	5478	5479	5480	5481	5482	5483	5484	5485
34	5486	5487	5488	5489	5490	5491	5492	5493	5494	5495	5496	5497
35	5498	5499	5500	5501	5502	5503	5504	5505	5506	5507	5508	5509
36	5510	5511	5512	5513	5514	5515	5516	5517	5518	5519	5520	5521
37	5522	5523	5524	5525	5526	5527	5528	5529	5530	5531	5532	5533
38	5534	5535	5536	5537	5538	5539	5540	5541	5542	5543	5544	5545
39	5546	5547	5548	5549	5550	5551	5552	5553	5554	5555	5556	5557
40	5558	5559	5560	5561	5562	5563	5564	5565	5566	5567	5568	5569
41	5570	5571	5572	5573	5574	5575	5576	5577	5578	5579	5580	5581
42	5582	5583	5584	5585	5586	5587	5588	5589	5590	5591	5592	5593
43	5594	5595	5596	5597	5598	5599	5600	5601	5602	5603	5604	5605
44	5606	5607	5608	5609	5610	5611	5612	5613	5614	5615	5616	5617
45	5618	5619	5620	5621	5622	5623	5624	5625	5626	5627	5628	5629
46	5630	5631	5632	5633	5634	5635	5636	5637	5638	5639	5640	5641
47	5642	5643	5644	5645	5646	5647	5648	5649	5650	5651	5652	5653
48	5654	5655	5656	5657	5658	5659	5660	5661	5662	5663	5664	5665
49	5666	5667	5668	5669	5670	5671	5672	5673	5674	5675	5676	5677
50	5678	5679	5680	5681	5682	5683	5684	5685	5686	5687	5688	5689

Module Internal Memory Address of "Read/Write Variable Data" command

Step	Target position		Cir. int. auxiliary point		Operation speed		Dwell time	M code	Sub. Axis setting	Helical int.	Circular int. turns	Control word
	Low	High	Low	High	Low	High						
51	5690	5691	5692	5693	5694	5695	5696	5697	5698	5699	5700	5701
52	5702	5703	5704	5705	5706	5707	5708	5709	5710	5711	5712	5713
53	5714	5715	5716	5717	5718	5719	5720	5721	5722	5723	5724	5725
54	5726	5727	5728	5729	5730	5731	5732	5733	5734	5735	5736	5737
55	5738	5739	5740	5741	5742	5743	5744	5745	5746	5747	5748	5749
56	5750	5751	5752	5753	5754	5755	5756	5757	5758	5759	5760	5761
57	5762	5763	5764	5765	5766	5767	5768	5769	5770	5771	5772	5773
58	5774	5775	5776	5777	5778	5779	5780	5781	5782	5783	5784	5785
59	5786	5787	5788	5789	5790	5791	5792	5793	5794	5795	5796	5797
60	5798	5799	5800	5801	5802	5803	5804	5805	5806	5807	5808	5809
61	5810	5811	5812	5813	5814	5815	5816	5817	5818	5819	5820	5821
62	5822	5823	5824	5825	5826	5827	5828	5829	5830	5831	5832	5833
63	5834	5835	5836	5837	5838	5839	5840	5841	5842	5843	5844	5845
64	5846	5847	5848	5849	5850	5851	5852	5853	5854	5855	5856	5857
65	5858	5859	5860	5861	5862	5863	5864	5865	5866	5867	5868	5869
66	5870	5871	5872	5873	5874	5875	5876	5877	5878	5879	5880	5881
67	5882	5883	5884	5885	5886	5887	5888	5889	5890	5891	5892	5893
68	5894	5895	5896	5897	5898	5899	5900	5901	5902	5903	5904	5905
69	5906	5907	5908	5909	5910	5911	5912	5913	5914	5915	5916	5917
70	5918	5919	5920	5921	5922	5923	5924	5925	5926	5927	5928	5929
71	5930	5931	5932	5933	5934	5935	5936	5937	5938	5939	5940	5941
72	5942	5943	5944	5945	5946	5947	5948	5949	5950	5951	5952	5953
73	5954	5955	5956	5957	5958	5959	5960	5961	5962	5963	5964	5965
74	5966	5967	5968	5969	5970	5971	5972	5973	5974	5975	5976	5977
75	5978	5979	5980	5981	5982	5983	5984	5985	5986	5987	5988	5989
76	5990	5991	5992	5993	5994	5995	5996	5997	5998	5999	6000	6001
77	6002	6003	6004	6005	6006	6007	6008	6009	6010	6011	6012	6013
78	6014	6015	6016	6017	6018	6019	6020	6021	6022	6023	6024	6025
79	6026	6027	6028	6029	6030	6031	6032	6033	6034	6035	6036	6037
80	6038	6039	6040	6041	6042	6043	6044	6045	6046	6047	6048	6049
81	6050	6051	6052	6053	6054	6055	6056	6057	6058	6059	6060	6061
82	6062	6063	6064	6065	6066	6067	6068	6069	6070	6071	6072	6073
83	6074	6075	6076	6077	6078	6079	6080	6081	6082	6083	6084	6085
84	6086	6087	6088	6089	6090	6091	6092	6093	6094	6095	6096	6097
85	6098	6099	6100	6101	6102	6103	6104	6105	6106	6107	6108	6109
86	6110	6111	6112	6113	6114	6115	6116	6117	6118	6119	6120	6121
87	6122	6123	6124	6125	6126	6127	6128	6129	6130	6131	6132	6133
88	6134	6135	6136	6137	6138	6139	6140	6141	6142	6143	6144	6145
89	6146	6147	6148	6149	6150	6151	6152	6153	6154	6155	6156	6157
90	6158	6159	6160	6161	6162	6163	6164	6165	6166	6167	6168	6169
91	6170	6171	6172	6173	6174	6175	6176	6177	6178	6179	6180	6181
92	6182	6183	6184	6185	6186	6187	6188	6189	6190	6191	6192	6193
93	6194	6195	6196	6197	6198	6199	6200	6201	6202	6203	6204	6205
94	6206	6207	6208	6209	6210	6211	6212	6213	6214	6215	6216	6217
95	6218	6219	6220	6221	6222	6223	6224	6225	6226	6227	6228	6229
96	6230	6231	6232	6233	6234	6235	6236	6237	6238	6239	6240	6241
97	6242	6243	6244	6245	6246	6247	6248	6249	6250	6251	6252	6253
98	6254	6255	6256	6257	6258	6259	6260	6261	6262	6263	6264	6265
99	6266	6267	6268	6269	6270	6271	6272	6273	6274	6275	6276	6277
100	6278	6279	6280	6281	6282	6283	6284	6285	6286	6287	6288	6289

Step	Target position		Cir. int. auxiliary point		Operation speed		Dwell time	M code	Sub. Axis setting	Helical int.	Circular int. turns	Control word
	Low	High	Low	High	Low	High						
101	6290	6291	6292	6293	6294	6295	6296	6297	6298	6299	6300	6301
102	6302	6303	6304	6305	6306	6307	6308	6309	6310	6311	6312	6313
103	6314	6315	6316	6317	6318	6319	6320	6321	6322	6323	6324	6325
104	6326	6327	6328	6329	6330	6331	6332	6333	6334	6335	6336	6337
105	6338	6339	6340	6341	6342	6343	6344	6345	6346	6347	6348	6349
106	6350	6351	6352	6353	6354	6355	6356	6357	6358	6359	6360	6361
107	6362	6363	6364	6365	6366	6367	6368	6369	6370	6371	6372	6373
108	6374	6375	6376	6377	6378	6379	6380	6381	6382	6383	6384	6385
109	6386	6387	6388	6389	6390	6391	6392	6393	6394	6395	6396	6397
110	6398	6399	6400	6401	6402	6403	6404	6405	6406	6407	6408	6409
111	6410	6411	6412	6413	6414	6415	6416	6417	6418	6419	6420	6421
112	6422	6423	6424	6425	6426	6427	6428	6429	6430	6431	6432	6433
113	6434	6435	6436	6437	6438	6439	6440	6441	6442	6443	6444	6445
114	6446	6447	6448	6449	6450	6451	6452	6453	6454	6455	6456	6457
115	6458	6459	6460	6461	6462	6463	6464	6465	6466	6467	6468	6469
116	6470	6471	6472	6473	6474	6475	6476	6477	6478	6479	6480	6481
117	6482	6483	6484	6485	6486	6487	6488	6489	6490	6491	6492	6493
118	6494	6495	6496	6497	6498	6499	6500	6501	6502	6503	6504	6505
119	6506	6507	6508	6509	6510	6511	6512	6513	6514	6515	6516	6517
120	6518	6519	6520	6521	6522	6523	6524	6525	6526	6527	6528	6529
121	6530	6531	6532	6533	6534	6535	6536	6537	6538	6539	6540	6541
122	6542	6543	6544	6545	6546	6547	6548	6549	6550	6551	6552	6553
123	6554	6555	6556	6557	6558	6559	6560	6561	6562	6563	6564	6565
124	6566	6567	6568	6569	6570	6571	6572	6573	6574	6575	6576	6577
125	6578	6579	6580	6581	6582	6583	6584	6585	6586	6587	6588	6589
126	6590	6591	6592	6593	6594	6595	6596	6597	6598	6599	6600	6601
127	6602	6603	6604	6605	6606	6607	6608	6609	6610	6611	6612	6613
128	6614	6615	6616	6617	6618	6619	6620	6621	6622	6623	6624	6625
129	6626	6627	6628	6629	6630	6631	6632	6633	6634	6635	6636	6637
130	6638	6639	6640	6641	6642	6643	6644	6645	6646	6647	6648	6649
131	6650	6651	6652	6653	6654	6655	6656	6657	6658	6659	6660	6661
132	6662	6663	6664	6665	6666	6667	6668	6669	6670	6671	6672	6673
133	6674	6675	6676	6677	6678	6679	6680	6681	6682	6683	6684	6685
134	6686	6687	6688	6689	6690	6691	6692	6693	6694	6695	6696	6697
135	6698	6699	6700	6701	6702	6703	6704	6705	6706	6707	6708	6709
136	6710	6711	6712	6713	6714	6715	6716	6717	6718	6719	6720	6721
137	6722	6723	6724	6725	6726	6727	6728	6729	6730	6731	6732	6733
138	6734	6735	6736	6737	6738	6739	6740	6741	6742	6743	6744	6745
139	6746	6747	6748	6749	6750	6751	6752	6753	6754	6755	6756	6757
140	6758	6759	6760	6761	6762	6763	6764	6765	6766	6767	6768	6769
141	6770	6771	6772	6773	6774	6775	6776	6777	6778	6779	6780	6781
142	6782	6783	6784	6785	6786	6787	6788	6789	6790	6791	6792	6793
143	6794	6795	6796	6797	6798	6799	6800	6801	6802	6803	6804	6805
144	6806	6807	6808	6809	6810	6811	6812	6813	6814	6815	6816	6817
145	6818	6819	6820	6821	6822	6823	6824	6825	6826	6827	6828	6829
146	6830	6831	6832	6833	6834	6835	6836	6837	6838	6839	6840	6841
147	6842	6843	6844	6845	6846	6847	6848	6849	6850	6851	6852	6853
148	6854	6855	6856	6857	6858	6859	6860	6861	6862	6863	6864	6865
149	6866	6867	6868	6869	6870	6871	6872	6873	6874	6875	6876	6877
150	6878	6879	6880	6881	6882	6883	6884	6885	6886	6887	6888	6889

Module Internal Memory Address of "Read/Write Variable Data" command

Step	Target position		Cir. int. auxiliary point		Operation speed		Dwell time	M code	Sub. Axis setting	Helical int.	Circular int. turns	Control word
	Low	High	Low	High	Low	High						
151	6890	6891	6892	6893	6894	6895	6896	6897	6898	6899	6900	6901
152	6902	6903	6904	6905	6906	6907	6908	6909	6910	6911	6912	6913
153	6914	6915	6916	6917	6918	6919	6920	6921	6922	6923	6924	6925
154	6926	6927	6928	6929	6930	6931	6932	6933	6934	6935	6936	6937
155	6938	6939	6940	6941	6942	6943	6944	6945	6946	6947	6948	6949
156	6950	6951	6952	6953	6954	6955	6956	6957	6958	6959	6960	6961
157	6962	6963	6964	6965	6966	6967	6968	6969	6970	6971	6972	6973
158	6974	6975	6976	6977	6978	6979	6980	6981	6982	6983	6984	6985
159	6986	6987	6988	6989	6990	6991	6992	6993	6994	6995	6996	6997
160	6998	6999	7000	7001	7002	7003	7004	7005	7006	7007	7008	7009
161	7010	7011	7012	7013	7014	7015	7016	7017	7018	7019	7020	7021
162	7022	7023	7024	7025	7026	7027	7028	7029	7030	7031	7032	7033
163	7034	7035	7036	7037	7038	7039	7040	7041	7042	7043	7044	7045
164	7046	7047	7048	7049	7050	7051	7052	7053	7054	7055	7056	7057
165	7058	7059	7060	7061	7062	7063	7064	7065	7066	7067	7068	7069
166	7070	7071	7072	7073	7074	7075	7076	7077	7078	7079	7080	7081
167	7082	7083	7084	7085	7086	7087	7088	7089	7090	7091	7092	7093
168	7094	7095	7096	7097	7098	7099	7100	7101	7102	7103	7104	7105
169	7106	7107	7108	7109	7110	7111	7112	7113	7114	7115	7116	7117
170	7118	7119	7120	7121	7122	7123	7124	7125	7126	7127	7128	7129
171	7130	7131	7132	7133	7134	7135	7136	7137	7138	7139	7140	7141
172	7142	7143	7144	7145	7146	7147	7148	7149	7150	7151	7152	7153
173	7154	7155	7156	7157	7158	7159	7160	7161	7162	7163	7164	7165
174	7166	7167	7168	7169	7170	7171	7172	7173	7174	7175	7176	7177
175	7178	7179	7180	7181	7182	7183	7184	7185	7186	7187	7188	7189
176	7190	7191	7192	7193	7194	7195	7196	7197	7198	7199	7200	7201
177	7202	7203	7204	7205	7206	7207	7208	7209	7210	7211	7212	7213
178	7214	7215	7216	7217	7218	7219	7220	7221	7222	7223	7224	7225
179	7226	7227	7228	7229	7230	7231	7232	7233	7234	7235	7236	7237
180	7238	7239	7240	7241	7242	7243	7244	7245	7246	7247	7248	7249
181	7250	7251	7252	7253	7254	7255	7256	7257	7258	7259	7260	7261
182	7262	7263	7264	7265	7266	7267	7268	7269	7270	7271	7272	7273
183	7274	7275	7276	7277	7278	7279	7280	7281	7282	7283	7284	7285
184	7286	7287	7288	7289	7290	7291	7292	7293	7294	7295	7296	7297
185	7298	7299	7300	7301	7302	7303	7304	7305	7306	7307	7308	7309
186	7310	7311	7312	7313	7314	7315	7316	7317	7318	7319	7320	7321
187	7322	7323	7324	7325	7326	7327	7328	7329	7330	7331	7332	7333
188	7334	7335	7336	7337	7338	7339	7340	7341	7342	7343	7344	7345
189	7346	7347	7348	7349	7350	7351	7352	7353	7354	7355	7356	7357
190	7358	7359	7360	7361	7362	7363	7364	7365	7366	7367	7368	7369
191	7370	7371	7372	7373	7374	7375	7376	7377	7378	7379	7380	7381
192	7382	7383	7384	7385	7386	7387	7388	7389	7390	7391	7392	7393
193	7394	7395	7396	7397	7398	7399	7400	7401	7402	7403	7404	7405
194	7406	7407	7408	7409	7410	7411	7412	7413	7414	7415	7416	7417
195	7418	7419	7420	7421	7422	7423	7424	7425	7426	7427	7428	7429
196	7430	7431	7432	7433	7434	7435	7436	7437	7438	7439	7440	7441
197	7442	7443	7444	7445	7446	7447	7448	7449	7450	7451	7452	7453
198	7454	7455	7456	7457	7458	7459	7460	7461	7462	7463	7464	7465
199	7466	7467	7468	7469	7470	7471	7472	7473	7474	7475	7476	7477
200	7478	7479	7480	7481	7482	7483	7484	7485	7486	7487	7488	7489

Step	Target position		Cir. int. auxiliary point		Operation speed		Dwell time	M code	Sub. Axis setting	Helical int.	Circular int. turns	Control word
	Low	High	Low	High	Low	High						
201	7490	7491	7492	7493	7494	7495	7496	7497	7498	7499	7500	7501
202	7502	7503	7504	7505	7506	7507	7508	7509	7510	7511	7512	7513
203	7514	7515	7516	7517	7518	7519	7520	7521	7522	7523	7524	7525
204	7526	7527	7528	7529	7530	7531	7532	7533	7534	7535	7536	7537
205	7538	7539	7540	7541	7542	7543	7544	7545	7546	7547	7548	7549
206	7550	7551	7552	7553	7554	7555	7556	7557	7558	7559	7560	7561
207	7562	7563	7564	7565	7566	7567	7568	7569	7570	7571	7572	7573
208	7574	7575	7576	7577	7578	7579	7580	7581	7582	7583	7584	7585
209	7586	7587	7588	7589	7590	7591	7592	7593	7594	7595	7596	7597
210	7598	7599	7600	7601	7602	7603	7604	7605	7606	7607	7608	7609
211	7610	7611	7612	7613	7614	7615	7616	7617	7618	7619	7620	7621
212	7622	7623	7624	7625	7626	7627	7628	7629	7630	7631	7632	7633
213	7634	7635	7636	7637	7638	7639	7640	7641	7642	7643	7644	7645
214	7646	7647	7648	7649	7650	7651	7652	7653	7654	7655	7656	7657
215	7658	7659	7660	7661	7662	7663	7664	7665	7666	7667	7668	7669
216	7670	7671	7672	7673	7674	7675	7676	7677	7678	7679	7680	7681
217	7682	7683	7684	7685	7686	7687	7688	7689	7690	7691	7692	7693
218	7694	7695	7696	7697	7698	7699	7700	7701	7702	7703	7704	7705
219	7706	7707	7708	7709	7710	7711	7712	7713	7714	7715	7716	7717
220	7718	7719	7720	7721	7722	7723	7724	7725	7726	7727	7728	7729
221	7730	7731	7732	7733	7734	7735	7736	7737	7738	7739	7740	7741
222	7742	7743	7744	7745	7746	7747	7748	7749	7750	7751	7752	7753
223	7754	7755	7756	7757	7758	7759	7760	7761	7762	7763	7764	7765
224	7766	7767	7768	7769	7770	7771	7772	7773	7774	7775	7776	7777
225	7778	7779	7780	7781	7782	7783	7784	7785	7786	7787	7788	7789
226	7790	7791	7792	7793	7794	7795	7796	7797	7798	7799	7800	7801
227	7802	7803	7804	7805	7806	7807	7808	7809	7810	7811	7812	7813
228	7814	7815	7816	7817	7818	7819	7820	7821	7822	7823	7824	7825
229	7826	7827	7828	7829	7830	7831	7832	7833	7834	7835	7836	7837
230	7838	7839	7840	7841	7842	7843	7844	7845	7846	7847	7848	7849
231	7850	7851	7852	7853	7854	7855	7856	7857	7858	7859	7860	7861
232	7862	7863	7864	7865	7866	7867	7868	7869	7870	7871	7872	7873
233	7874	7875	7876	7877	7878	7879	7880	7881	7882	7883	7884	7885
234	7886	7887	7888	7889	7890	7891	7892	7893	7894	7895	7896	7897
235	7898	7899	7900	7901	7902	7903	7904	7905	7906	7907	7908	7909
236	7910	7911	7912	7913	7914	7915	7916	7917	7918	7919	7920	7921
237	7922	7923	7924	7925	7926	7927	7928	7929	7930	7931	7932	7933
238	7934	7935	7936	7937	7938	7939	7940	7941	7942	7943	7944	7945
239	7946	7947	7948	7949	7950	7951	7952	7953	7954	7955	7956	7957
240	7958	7959	7960	7961	7962	7963	7964	7965	7966	7967	7968	7969
241	7970	7971	7972	7973	7974	7975	7976	7977	7978	7979	7980	7981
242	7982	7983	7984	7985	7986	7987	7988	7989	7990	7991	7992	7993
243	7994	7995	7996	7997	7998	7999	8000	8001	8002	8003	8004	8005
244	8006	8007	8008	8009	8010	8011	8012	8013	8014	8015	8016	8017
245	8018	8019	8020	8021	8022	8023	8024	8025	8026	8027	8028	8029
246	8030	8031	8032	8033	8034	8035	8036	8037	8038	8039	8040	8041
247	8042	8043	8044	8045	8046	8047	8048	8049	8050	8051	8052	8053
248	8054	8055	8056	8057	8058	8059	8060	8061	8062	8063	8064	8065
249	8066	8067	8068	8069	8070	8071	8072	8073	8074	8075	8076	8077
250	8078	8079	8080	8081	8082	8083	8084	8085	8086	8087	8088	8089

Module Internal Memory Address of "Read/Write Variable Data" command

Step	Target position		Cir. int. auxiliary point		Operation speed		Dwell time	M code	Sub. Axis setting	Helical int.	Circular int. turns	Control word
	Low	High	Low	High	Low	High						
251	8090	8091	8092	8093	8094	8095	8096	8097	8098	8099	8100	8101
252	8102	8103	8104	8105	8106	8107	8108	8109	8110	8111	8112	8113
253	8114	8115	8116	8117	8118	8119	8120	8121	8122	8123	8124	8125
254	8126	8127	8128	8129	8130	8131	8132	8133	8134	8135	8136	8137
255	8138	8139	8140	8141	8142	8143	8144	8145	8146	8147	8148	8149
256	8150	8151	8152	8153	8154	8155	8156	8157	8158	8159	8160	8161
257	8162	8163	8164	8165	8166	8167	8168	8169	8170	8171	8172	8173
258	8174	8175	8176	8177	8178	8179	8180	8181	8182	8183	8184	8185
259	8186	8187	8188	8189	8190	8191	8192	8193	8194	8195	8196	8197
260	8198	8199	8200	8201	8202	8203	8204	8205	8206	8207	8208	8209
261	8210	8211	8212	8213	8214	8215	8216	8217	8218	8219	8220	8221
262	8222	8223	8224	8225	8226	8227	8228	8229	8230	8231	8232	8233
263	8234	8235	8236	8237	8238	8239	8240	8241	8242	8243	8244	8245
264	8246	8247	8248	8249	8250	8251	8252	8253	8254	8255	8256	8257
265	8258	8259	8260	8261	8262	8263	8264	8265	8266	8267	8268	8269
266	8270	8271	8272	8273	8274	8275	8276	8277	8278	8279	8280	8281
267	8282	8283	8284	8285	8286	8287	8288	8289	8290	8291	8292	8293
268	8294	8295	8296	8297	8298	8299	8300	8301	8302	8303	8304	8305
269	8306	8307	8308	8309	8310	8311	8312	8313	8314	8315	8316	8317
270	8318	8319	8320	8321	8322	8323	8324	8325	8326	8327	8328	8329
271	8330	8331	8332	8333	8334	8335	8336	8337	8338	8339	8340	8341
272	8342	8343	8344	8345	8346	8347	8348	8349	8350	8351	8352	8353
273	8354	8355	8356	8357	8358	8359	8360	8361	8362	8363	8364	8365
274	8366	8367	8368	8369	8370	8371	8372	8373	8374	8375	8376	8377
275	8378	8379	8380	8381	8382	8383	8384	8385	8386	8387	8388	8389
276	8390	8391	8392	8393	8394	8395	8396	8397	8398	8399	8400	8401
277	8402	8403	8404	8405	8406	8407	8408	8409	8410	8411	8412	8413
278	8414	8415	8416	8417	8418	8419	8420	8421	8422	8423	8424	8425
279	8426	8427	8428	8429	8430	8431	8432	8433	8434	8435	8436	8437
280	8438	8439	8440	8441	8442	8443	8444	8445	8446	8447	8448	8449
281	8450	8451	8452	8453	8454	8455	8456	8457	8458	8459	8460	8461
282	8462	8463	8464	8465	8466	8467	8468	8469	8470	8471	8472	8473
283	8474	8475	8476	8477	8478	8479	8480	8481	8482	8483	8484	8485
284	8486	8487	8488	8489	8490	8491	8492	8493	8494	8495	8496	8497
285	8498	8499	8500	8501	8502	8503	8504	8505	8506	8507	8508	8509
286	8510	8511	8512	8513	8514	8515	8516	8517	8518	8519	8520	8521
287	8522	8523	8524	8525	8526	8527	8528	8529	8530	8531	8532	8533
288	8534	8535	8536	8537	8538	8539	8540	8541	8542	8543	8544	8545
289	8546	8547	8548	8549	8550	8551	8552	8553	8554	8555	8556	8557
290	8558	8559	8560	8561	8562	8563	8564	8565	8566	8567	8568	8569
291	8570	8571	8572	8573	8574	8575	8576	8577	8578	8579	8580	8581
292	8582	8583	8584	8585	8586	8587	8588	8589	8590	8591	8592	8593
293	8594	8595	8596	8597	8598	8599	8600	8601	8602	8603	8604	8605
294	8606	8607	8608	8609	8610	8611	8612	8613	8614	8615	8616	8617
295	8618	8619	8620	8621	8622	8623	8624	8625	8626	8627	8628	8629
296	8630	8631	8632	8633	8634	8635	8636	8637	8638	8639	8640	8641
297	8642	8643	8644	8645	8646	8647	8648	8649	8650	8651	8652	8653
298	8654	8655	8656	8657	8658	8659	8660	8661	8662	8663	8664	8665
299	8666	8667	8668	8669	8670	8671	8672	8673	8674	8675	8676	8677
300	8678	8679	8680	8681	8682	8683	8684	8685	8686	8687	8688	8689

Step	Target position		Cir. int. auxiliary point		Operation speed		Dwell time	M code	Sub. Axis setting	Helical int.	Circular int. turns	Control word
	Low	High	Low	High	Low	High						
301	8690	8691	8692	8693	8694	8695	8696	8697	8698	8699	8700	8701
302	8702	8703	8704	8705	8706	8707	8708	8709	8710	8711	8712	8713
303	8714	8715	8716	8717	8718	8719	8720	8721	8722	8723	8724	8725
304	8726	8727	8728	8729	8730	8731	8732	8733	8734	8735	8736	8737
305	8738	8739	8740	8741	8742	8743	8744	8745	8746	8747	8748	8749
306	8750	8751	8752	8753	8754	8755	8756	8757	8758	8759	8760	8761
307	8762	8763	8764	8765	8766	8767	8768	8769	8770	8771	8772	8773
308	8774	8775	8776	8777	8778	8779	8780	8781	8782	8783	8784	8785
309	8786	8787	8788	8789	8790	8791	8792	8793	8794	8795	8796	8797
310	8798	8799	8800	8801	8802	8803	8804	8805	8806	8807	8808	8809
311	8810	8811	8812	8813	8814	8815	8816	8817	8818	8819	8820	8821
312	8822	8823	8824	8825	8826	8827	8828	8829	8830	8831	8832	8833
313	8834	8835	8836	8837	8838	8839	8840	8841	8842	8843	8844	8845
314	8846	8847	8848	8849	8850	8851	8852	8853	8854	8855	8856	8857
315	8858	8859	8860	8861	8862	8863	8864	8865	8866	8867	8868	8869
316	8870	8871	8872	8873	8874	8875	8876	8877	8878	8879	8880	8881
317	8882	8883	8884	8885	8886	8887	8888	8889	8890	8891	8892	8893
318	8894	8895	8896	8897	8898	8899	8900	8901	8902	8903	8904	8905
319	8906	8907	8908	8909	8910	8911	8912	8913	8914	8915	8916	8917
320	8918	8919	8920	8921	8922	8923	8924	8925	8926	8927	8928	8929
321	8930	8931	8932	8933	8934	8935	8936	8937	8938	8939	8940	8941
322	8942	8943	8944	8945	8946	8947	8948	8949	8950	8951	8952	8953
323	8954	8955	8956	8957	8958	8959	8960	8961	8962	8963	8964	8965
324	8966	8967	8968	8969	8970	8971	8972	8973	8974	8975	8976	8977
325	8978	8979	8980	8981	8982	8983	8984	8985	8986	8987	8988	8989
326	8990	8991	8992	8993	8994	8995	8996	8997	8998	8999	9000	9001
327	9002	9003	9004	9005	9006	9007	9008	9009	9010	9011	9012	9013
328	9014	9015	9016	9017	9018	9019	9020	9021	9022	9023	9024	9025
329	9026	9027	9028	9029	9030	9031	9032	9033	9034	9035	9036	9037
330	9038	9039	9040	9041	9042	9043	9044	9045	9046	9047	9048	9049
331	9050	9051	9052	9053	9054	9055	9056	9057	9058	9059	9060	9061
332	9062	9063	9064	9065	9066	9067	9068	9069	9070	9071	9072	9073
333	9074	9075	9076	9077	9078	9079	9080	9081	9082	9083	9084	9085
334	9086	9087	9088	9089	9090	9091	9092	9093	9094	9095	9096	9097
335	9098	9099	9100	9101	9102	9103	9104	9105	9106	9107	9108	9109
336	9110	9111	9112	9113	9114	9115	9116	9117	9118	9119	9120	9121
337	9122	9123	9124	9125	9126	9127	9128	9129	9130	9131	9132	9133
338	9134	9135	9136	9137	9138	9139	9140	9141	9142	9143	9144	9145
339	9146	9147	9148	9149	9150	9151	9152	9153	9154	9155	9156	9157
340	9158	9159	9160	9161	9162	9163	9164	9165	9166	9167	9168	9169
341	9170	9171	9172	9173	9174	9175	9176	9177	9178	9179	9180	9181
342	9182	9183	9184	9185	9186	9187	9188	9189	9190	9191	9192	9193
343	9194	9195	9196	9197	9198	9199	9200	9201	9202	9203	9204	9205
344	9206	9207	9208	9209	9210	9211	9212	9213	9214	9215	9216	9217
345	9218	9219	9220	9221	9222	9223	9224	9225	9226	9227	9228	9229
346	9230	9231	9232	9233	9234	9235	9236	9237	9238	9239	9240	9241
347	9242	9243	9244	9245	9246	9247	9248	9249	9250	9251	9252	9253
348	9254	9255	9256	9257	9258	9259	9260	9261	9262	9263	9264	9265
349	9266	9267	9268	9269	9270	9271	9272	9273	9274	9275	9276	9277
350	9278	9279	9280	9281	9282	9283	9284	9285	9286	9287	9288	9289

Module Internal Memory Address of "Read/Write Variable Data" command

Step	Target position		Cir. int. auxiliary point		Operation speed		Dwell time	M code	Sub. Axis setting	Helical int.	Circular int. turns	Control word
	Low	High	Low	High	Low	High						
351	9290	9291	9292	9293	9294	9295	9296	9297	9298	9299	9300	9301
352	9302	9303	9304	9305	9306	9307	9308	9309	9310	9311	9312	9313
353	9314	9315	9316	9317	9318	9319	9320	9321	9322	9323	9324	9325
354	9326	9327	9328	9329	9330	9331	9332	9333	9334	9335	9336	9337
355	9338	9339	9340	9341	9342	9343	9344	9345	9346	9347	9348	9349
356	9350	9351	9352	9353	9354	9355	9356	9357	9358	9359	9360	9361
357	9362	9363	9364	9365	9366	9367	9368	9369	9370	9371	9372	9373
358	9374	9375	9376	9377	9378	9379	9380	9381	9382	9383	9384	9385
359	9386	9387	9388	9389	9390	9391	9392	9393	9394	9395	9396	9397
360	9398	9399	9400	9401	9402	9403	9404	9405	9406	9407	9408	9409
361	9410	9411	9412	9413	9414	9415	9416	9417	9418	9419	9420	9421
362	9422	9423	9424	9425	9426	9427	9428	9429	9430	9431	9432	9433
363	9434	9435	9436	9437	9438	9439	9440	9441	9442	9443	9444	9445
364	9446	9447	9448	9449	9450	9451	9452	9453	9454	9455	9456	9457
365	9458	9459	9460	9461	9462	9463	9464	9465	9466	9467	9468	9469
366	9470	9471	9472	9473	9474	9475	9476	9477	9478	9479	9480	9481
367	9482	9483	9484	9485	9486	9487	9488	9489	9490	9491	9492	9493
368	9494	9495	9496	9497	9498	9499	9500	9501	9502	9503	9504	9505
369	9506	9507	9508	9509	9510	9511	9512	9513	9514	9515	9516	9517
370	9518	9519	9520	9521	9522	9523	9524	9525	9526	9527	9528	9529
371	9530	9531	9532	9533	9534	9535	9536	9537	9538	9539	9540	9541
372	9542	9543	9544	9545	9546	9547	9548	9549	9550	9551	9552	9553
373	9554	9555	9556	9557	9558	9559	9560	9561	9562	9563	9564	9565
374	9566	9567	9568	9569	9570	9571	9572	9573	9574	9575	9576	9577
375	9578	9579	9580	9581	9582	9583	9584	9585	9586	9587	9588	9589
376	9590	9591	9592	9593	9594	9595	9596	9597	9598	9599	9600	9601
377	9602	9603	9604	9605	9606	9607	9608	9609	9610	9611	9612	9613
378	9614	9615	9616	9617	9618	9619	9620	9621	9622	9623	9624	9625
379	9626	9627	9628	9629	9630	9631	9632	9633	9634	9635	9636	9637
380	9638	9639	9640	9641	9642	9643	9644	9645	9646	9647	9648	9649
381	9650	9651	9652	9653	9654	9655	9656	9657	9658	9659	9660	9661
382	9662	9663	9664	9665	9666	9667	9668	9669	9670	9671	9672	9673
383	9674	9675	9676	9677	9678	9679	9680	9681	9682	9683	9684	9685
384	9686	9687	9688	9689	9690	9691	9692	9693	9694	9695	9696	9697
385	9698	9699	9700	9701	9702	9703	9704	9705	9706	9707	9708	9709
386	9710	9711	9712	9713	9714	9715	9716	9717	9718	9719	9720	9721
387	9722	9723	9724	9725	9726	9727	9728	9729	9730	9731	9732	9733
388	9734	9735	9736	9737	9738	9739	9740	9741	9742	9743	9744	9745
389	9746	9747	9748	9749	9750	9751	9752	9753	9754	9755	9756	9757
390	9758	9759	9760	9761	9762	9763	9764	9765	9766	9767	9768	9769
391	9770	9771	9772	9773	9774	9775	9776	9777	9778	9779	9780	9781
392	9782	9783	9784	9785	9786	9787	9788	9789	9790	9791	9792	9793
393	9794	9795	9796	9797	9798	9799	9800	9801	9802	9803	9804	9805
394	9806	9807	9808	9809	9810	9811	9812	9813	9814	9815	9816	9817
395	9818	9819	9820	9821	9822	9823	9824	9825	9826	9827	9828	9829
396	9830	9831	9832	9833	9834	9835	9836	9837	9838	9839	9840	9841
397	9842	9843	9844	9845	9846	9847	9848	9849	9850	9851	9852	9853
398	9854	9855	9856	9857	9858	9859	9860	9861	9862	9863	9864	9865
399	9866	9867	9868	9869	9870	9871	9872	9873	9874	9875	9876	9877
400	9878	9879	9880	9881	9882	9883	9884	9885	9886	9887	9888	9889

Appendix 3.4 Axis 3 operation data memory address

Step	Target position		Cir. int. auxiliary point		Operation speed		Dwell time	M code	Sub. Axis setting	Helical int.	Circular int. turns	Control word
	Low	High	Low	High	Low	High						
1	9890	9891	9892	9893	9894	9895	9896	9897	9898	9899	9900	9901
2	9902	9903	9904	9905	9906	9907	9908	9909	9910	9911	9912	9913
3	9914	9915	9916	9917	9918	9919	9920	9921	9922	9923	9924	9925
4	9926	9927	9928	9929	9930	9931	9932	9933	9934	9935	9936	9937
5	9938	9939	9940	9941	9942	9943	9944	9945	9946	9947	9948	9949
6	9950	9951	9952	9953	9954	9955	9956	9957	9958	9959	9960	9961
7	9962	9963	9964	9965	9966	9967	9968	9969	9970	9971	9972	9973
8	9974	9975	9976	9977	9978	9979	9980	9981	9982	9983	9984	9985
9	9986	9987	9988	9989	9990	9991	9992	9993	9994	9995	9996	9997
10	9998	9999	10000	10001	10002	10003	10004	10005	10006	10007	10008	10009
11	10010	10011	10012	10013	10014	10015	10016	10017	10018	10019	10020	10021
12	10022	10023	10024	10025	10026	10027	10028	10029	10030	10031	10032	10033
13	10034	10035	10036	10037	10038	10039	10040	10041	10042	10043	10044	10045
14	10046	10047	10048	10049	10050	10051	10052	10053	10054	10055	10056	10057
15	10058	10059	10060	10061	10062	10063	10064	10065	10066	10067	10068	10069
16	10070	10071	10072	10073	10074	10075	10076	10077	10078	10079	10080	10081
17	10082	10083	10084	10085	10086	10087	10088	10089	10090	10091	10092	10093
18	10094	10095	10096	10097	10098	10099	10100	10101	10102	10103	10104	10105
19	10106	10107	10108	10109	10110	10111	10112	10113	10114	10115	10116	10117
20	10118	10119	10120	10121	10122	10123	10124	10125	10126	10127	10128	10129
21	10130	10131	10132	10133	10134	10135	10136	10137	10138	10139	10140	10141
22	10142	10143	10144	10145	10146	10147	10148	10149	10150	10151	10152	10153
23	10154	10155	10156	10157	10158	10159	10160	10161	10162	10163	10164	10165
24	10166	10167	10168	10169	10170	10171	10172	10173	10174	10175	10176	10177
25	10178	10179	10180	10181	10182	10183	10184	10185	10186	10187	10188	10189
26	10190	10191	10192	10193	10194	10195	10196	10197	10198	10199	10200	10201
27	10202	10203	10204	10205	10206	10207	10208	10209	10210	10211	10212	10213
28	10214	10215	10216	10217	10218	10219	10220	10221	10222	10223	10224	10225
29	10226	10227	10228	10229	10230	10231	10232	10233	10234	10235	10236	10237
30	10238	10239	10240	10241	10242	10243	10244	10245	10246	10247	10248	10249
31	10250	10251	10252	10253	10254	10255	10256	10257	10258	10259	10260	10261
32	10262	10263	10264	10265	10266	10267	10268	10269	10270	10271	10272	10273
33	10274	10275	10276	10277	10278	10279	10280	10281	10282	10283	10284	10285
34	10286	10287	10288	10289	10290	10291	10292	10293	10294	10295	10296	10297
35	10298	10299	10300	10301	10302	10303	10304	10305	10306	10307	10308	10309
36	10310	10311	10312	10313	10314	10315	10316	10317	10318	10319	10320	10321
37	10322	10323	10324	10325	10326	10327	10328	10329	10330	10331	10332	10333
38	10334	10335	10336	10337	10338	10339	10340	10341	10342	10343	10344	10345
39	10346	10347	10348	10349	10350	10351	10352	10353	10354	10355	10356	10357
40	10358	10359	10360	10361	10362	10363	10364	10365	10366	10367	10368	10369
41	10370	10371	10372	10373	10374	10375	10376	10377	10378	10379	10380	10381
42	10382	10383	10384	10385	10386	10387	10388	10389	10390	10391	10392	10393
43	10394	10395	10396	10397	10398	10399	10400	10401	10402	10403	10404	10405
44	10406	10407	10408	10409	10410	10411	10412	10413	10414	10415	10416	10417
45	10418	10419	10420	10421	10422	10423	10424	10425	10426	10427	10428	10429
46	10430	10431	10432	10433	10434	10435	10436	10437	10438	10439	10440	10441
47	10442	10443	10444	10445	10446	10447	10448	10449	10450	10451	10452	10453
48	10454	10455	10456	10457	10458	10459	10460	10461	10462	10463	10464	10465
49	10466	10467	10468	10469	10470	10471	10472	10473	10474	10475	10476	10477
50	10478	10479	10480	10481	10482	10483	10484	10485	10486	10487	10488	10489

Module Internal Memory Address of "Read/Write Variable Data" command

Step	Target position		Cir. int. auxiliary point		Operation speed		Dwell time	M code	Sub. Axis setting	Helical int.	Circular int. turns	Control word
	Low	High	Low	High	Low	High						
51	10490	10491	10492	10493	10494	10495	10496	10497	10498	10499	10500	10501
52	10502	10503	10504	10505	10506	10507	10508	10509	10510	10511	10512	10513
53	10514	10515	10516	10517	10518	10519	10520	10521	10522	10523	10524	10525
54	10526	10527	10528	10529	10530	10531	10532	10533	10534	10535	10536	10537
55	10538	10539	10540	10541	10542	10543	10544	10545	10546	10547	10548	10549
56	10550	10551	10552	10553	10554	10555	10556	10557	10558	10559	10560	10561
57	10562	10563	10564	10565	10566	10567	10568	10569	10570	10571	10572	10573
58	10574	10575	10576	10577	10578	10579	10580	10581	10582	10583	10584	10585
59	10586	10587	10588	10589	10590	10591	10592	10593	10594	10595	10596	10597
60	10598	10599	10600	10601	10602	10603	10604	10605	10606	10607	10608	10609
61	10610	10611	10612	10613	10614	10615	10616	10617	10618	10619	10620	10621
62	10622	10623	10624	10625	10626	10627	10628	10629	10630	10631	10632	10633
63	10634	10635	10636	10637	10638	10639	10640	10641	10642	10643	10644	10645
64	10646	10647	10648	10649	10650	10651	10652	10653	10654	10655	10656	10657
65	10658	10659	10660	10661	10662	10663	10664	10665	10666	10667	10668	10669
66	10670	10671	10672	10673	10674	10675	10676	10677	10678	10679	10680	10681
67	10682	10683	10684	10685	10686	10687	10688	10689	10690	10691	10692	10693
68	10694	10695	10696	10697	10698	10699	10700	10701	10702	10703	10704	10705
69	10706	10707	10708	10709	10710	10711	10712	10713	10714	10715	10716	10717
70	10718	10719	10720	10721	10722	10723	10724	10725	10726	10727	10728	10729
71	10730	10731	10732	10733	10734	10735	10736	10737	10738	10739	10740	10741
72	10742	10743	10744	10745	10746	10747	10748	10749	10750	10751	10752	10753
73	10754	10755	10756	10757	10758	10759	10760	10761	10762	10763	10764	10765
74	10766	10767	10768	10769	10770	10771	10772	10773	10774	10775	10776	10777
75	10778	10779	10780	10781	10782	10783	10784	10785	10786	10787	10788	10789
76	10790	10791	10792	10793	10794	10795	10796	10797	10798	10799	10800	10801
77	10802	10803	10804	10805	10806	10807	10808	10809	10810	10811	10812	10813
78	10814	10815	10816	10817	10818	10819	10820	10821	10822	10823	10824	10825
79	10826	10827	10828	10829	10830	10831	10832	10833	10834	10835	10836	10837
80	10838	10839	10840	10841	10842	10843	10844	10845	10846	10847	10848	10849
81	10850	10851	10852	10853	10854	10855	10856	10857	10858	10859	10860	10861
82	10862	10863	10864	10865	10866	10867	10868	10869	10870	10871	10872	10873
83	10874	10875	10876	10877	10878	10879	10880	10881	10882	10883	10884	10885
84	10886	10887	10888	10889	10890	10891	10892	10893	10894	10895	10896	10897
85	10898	10899	10900	10901	10902	10903	10904	10905	10906	10907	10908	10909
86	10910	10911	10912	10913	10914	10915	10916	10917	10918	10919	10920	10921
87	10922	10923	10924	10925	10926	10927	10928	10929	10930	10931	10932	10933
88	10934	10935	10936	10937	10938	10939	10940	10941	10942	10943	10944	10945
89	10946	10947	10948	10949	10950	10951	10952	10953	10954	10955	10956	10957
90	10958	10959	10960	10961	10962	10963	10964	10965	10966	10967	10968	10969
91	10970	10971	10972	10973	10974	10975	10976	10977	10978	10979	10980	10981
92	10982	10983	10984	10985	10986	10987	10988	10989	10990	10991	10992	10993
93	10994	10995	10996	10997	10998	10999	11000	11001	11002	11003	11004	11005
94	11006	11007	11008	11009	11010	11011	11012	11013	11014	11015	11016	11017
95	11018	11019	11020	11021	11022	11023	11024	11025	11026	11027	11028	11029
96	11030	11031	11032	11033	11034	11035	11036	11037	11038	11039	11040	11041
97	11042	11043	11044	11045	11046	11047	11048	11049	11050	11051	11052	11053
98	11054	11055	11056	11057	11058	11059	11060	11061	11062	11063	11064	11065
99	11066	11067	11068	11069	11070	11071	11072	11073	11074	11075	11076	11077
100	11078	11079	11080	11081	11082	11083	11084	11085	11086	11087	11088	11089

Step	Target position		Cir. int. auxiliary point		Operation speed		Dwell time	M code	Sub. Axis setting	Helical int.	Circular int. turns	Control word
	Low	High	Low	High	Low	High						
101	11090	11091	11092	11093	11094	11095	11096	11097	11098	11099	11100	11101
102	11102	11103	11104	11105	11106	11107	11108	11109	11110	11111	11112	11113
103	11114	11115	11116	11117	11118	11119	11120	11121	11122	11123	11124	11125
104	11126	11127	11128	11129	11130	11131	11132	11133	11134	11135	11136	11137
105	11138	11139	11140	11141	11142	11143	11144	11145	11146	11147	11148	11149
106	11150	11151	11152	11153	11154	11155	11156	11157	11158	11159	11160	11161
107	11162	11163	11164	11165	11166	11167	11168	11169	11170	11171	11172	11173
108	11174	11175	11176	11177	11178	11179	11180	11181	11182	11183	11184	11185
109	11186	11187	11188	11189	11190	11191	11192	11193	11194	11195	11196	11197
110	11198	11199	11200	11201	11202	11203	11204	11205	11206	11207	11208	11209
111	11210	11211	11212	11213	11214	11215	11216	11217	11218	11219	11220	11221
112	11222	11223	11224	11225	11226	11227	11228	11229	11230	11231	11232	11233
113	11234	11235	11236	11237	11238	11239	11240	11241	11242	11243	11244	11245
114	11246	11247	11248	11249	11250	11251	11252	11253	11254	11255	11256	11257
115	11258	11259	11260	11261	11262	11263	11264	11265	11266	11267	11268	11269
116	11270	11271	11272	11273	11274	11275	11276	11277	11278	11279	11280	11281
117	11282	11283	11284	11285	11286	11287	11288	11289	11290	11291	11292	11293
118	11294	11295	11296	11297	11298	11299	11300	11301	11302	11303	11304	11305
119	11306	11307	11308	11309	11310	11311	11312	11313	11314	11315	11316	11317
120	11318	11319	11320	11321	11322	11323	11324	11325	11326	11327	11328	11329
121	11330	11331	11332	11333	11334	11335	11336	11337	11338	11339	11340	11341
122	11342	11343	11344	11345	11346	11347	11348	11349	11350	11351	11352	11353
123	11354	11355	11356	11357	11358	11359	11360	11361	11362	11363	11364	11365
124	11366	11367	11368	11369	11370	11371	11372	11373	11374	11375	11376	11377
125	11378	11379	11380	11381	11382	11383	11384	11385	11386	11387	11388	11389
126	11390	11391	11392	11393	11394	11395	11396	11397	11398	11399	11400	11401
127	11402	11403	11404	11405	11406	11407	11408	11409	11410	11411	11412	11413
128	11414	11415	11416	11417	11418	11419	11420	11421	11422	11423	11424	11425
129	11426	11427	11428	11429	11430	11431	11432	11433	11434	11435	11436	11437
130	11438	11439	11440	11441	11442	11443	11444	11445	11446	11447	11448	11449
131	11450	11451	11452	11453	11454	11455	11456	11457	11458	11459	11460	11461
132	11462	11463	11464	11465	11466	11467	11468	11469	11470	11471	11472	11473
133	11474	11475	11476	11477	11478	11479	11480	11481	11482	11483	11484	11485
134	11486	11487	11488	11489	11490	11491	11492	11493	11494	11495	11496	11497
135	11498	11499	11500	11501	11502	11503	11504	11505	11506	11507	11508	11509
136	11510	11511	11512	11513	11514	11515	11516	11517	11518	11519	11520	11521
137	11522	11523	11524	11525	11526	11527	11528	11529	11530	11531	11532	11533
138	11534	11535	11536	11537	11538	11539	11540	11541	11542	11543	11544	11545
139	11546	11547	11548	11549	11550	11551	11552	11553	11554	11555	11556	11557
140	11558	11559	11560	11561	11562	11563	11564	11565	11566	11567	11568	11569
141	11570	11571	11572	11573	11574	11575	11576	11577	11578	11579	11580	11581
142	11582	11583	11584	11585	11586	11587	11588	11589	11590	11591	11592	11593
143	11594	11595	11596	11597	11598	11599	11600	11601	11602	11603	11604	11605
144	11606	11607	11608	11609	11610	11611	11612	11613	11614	11615	11616	11617
145	11618	11619	11620	11621	11622	11623	11624	11625	11626	11627	11628	11629
146	11630	11631	11632	11633	11634	11635	11636	11637	11638	11639	11640	11641
147	11642	11643	11644	11645	11646	11647	11648	11649	11650	11651	11652	11653
148	11654	11655	11656	11657	11658	11659	11660	11661	11662	11663	11664	11665
149	11666	11667	11668	11669	11670	11671	11672	11673	11674	11675	11676	11677
150	11678	11679	11680	11681	11682	11683	11684	11685	11686	11687	11688	11689

Step	Target position		Cir. int. auxiliary point		Operation speed		Dwell time	M code	Sub. Axis setting	Helical int.	Circular int. turns	Control word
	Low	High	Low	High	Low	High						
151	11690	11691	11692	11693	11694	11695	11696	11697	11698	11699	11700	11701
152	11702	11703	11704	11705	11706	11707	11708	11709	11710	11711	11712	11713
153	11714	11715	11716	11717	11718	11719	11720	11721	11722	11723	11724	11725
154	11726	11727	11728	11729	11730	11731	11732	11733	11734	11735	11736	11737
155	11738	11739	11740	11741	11742	11743	11744	11745	11746	11747	11748	11749
156	11750	11751	11752	11753	11754	11755	11756	11757	11758	11759	11760	11761
157	11762	11763	11764	11765	11766	11767	11768	11769	11770	11771	11772	11773
158	11774	11775	11776	11777	11778	11779	11780	11781	11782	11783	11784	11785
159	11786	11787	11788	11789	11790	11791	11792	11793	11794	11795	11796	11797
160	11798	11799	11800	11801	11802	11803	11804	11805	11806	11807	11808	11809
161	11810	11811	11812	11813	11814	11815	11816	11817	11818	11819	11820	11821
162	11822	11823	11824	11825	11826	11827	11828	11829	11830	11831	11832	11833
163	11834	11835	11836	11837	11838	11839	11840	11841	11842	11843	11844	11845
164	11846	11847	11848	11849	11850	11851	11852	11853	11854	11855	11856	11857
165	11858	11859	11860	11861	11862	11863	11864	11865	11866	11867	11868	11869
166	11870	11871	11872	11873	11874	11875	11876	11877	11878	11879	11880	11881
167	11882	11883	11884	11885	11886	11887	11888	11889	11890	11891	11892	11893
168	11894	11895	11896	11897	11898	11899	11900	11901	11902	11903	11904	11905
169	11906	11907	11908	11909	11910	11911	11912	11913	11914	11915	11916	11917
170	11918	11919	11920	11921	11922	11923	11924	11925	11926	11927	11928	11929
171	11930	11931	11932	11933	11934	11935	11936	11937	11938	11939	11940	11941
172	11942	11943	11944	11945	11946	11947	11948	11949	11950	11951	11952	11953
173	11954	11955	11956	11957	11958	11959	11960	11961	11962	11963	11964	11965
174	11966	11967	11968	11969	11970	11971	11972	11973	11974	11975	11976	11977
175	11978	11979	11980	11981	11982	11983	11984	11985	11986	11987	11988	11989
176	11990	11991	11992	11993	11994	11995	11996	11997	11998	11999	12000	12001
177	12002	12003	12004	12005	12006	12007	12008	12009	12010	12011	12012	12013
178	12014	12015	12016	12017	12018	12019	12020	12021	12022	12023	12024	12025
179	12026	12027	12028	12029	12030	12031	12032	12033	12034	12035	12036	12037
180	12038	12039	12040	12041	12042	12043	12044	12045	12046	12047	12048	12049
181	12050	12051	12052	12053	12054	12055	12056	12057	12058	12059	12060	12061
182	12062	12063	12064	12065	12066	12067	12068	12069	12070	12071	12072	12073
183	12074	12075	12076	12077	12078	12079	12080	12081	12082	12083	12084	12085
184	12086	12087	12088	12089	12090	12091	12092	12093	12094	12095	12096	12097
185	12098	12099	12100	12101	12102	12103	12104	12105	12106	12107	12108	12109
186	12110	12111	12112	12113	12114	12115	12116	12117	12118	12119	12120	12121
187	12122	12123	12124	12125	12126	12127	12128	12129	12130	12131	12132	12133
188	12134	12135	12136	12137	12138	12139	12140	12141	12142	12143	12144	12145
189	12146	12147	12148	12149	12150	12151	12152	12153	12154	12155	12156	12157
190	12158	12159	12160	12161	12162	12163	12164	12165	12166	12167	12168	12169
191	12170	12171	12172	12173	12174	12175	12176	12177	12178	12179	12180	12181
192	12182	12183	12184	12185	12186	12187	12188	12189	12190	12191	12192	12193
193	12194	12195	12196	12197	12198	12199	12200	12201	12202	12203	12204	12205
194	12206	12207	12208	12209	12210	12211	12212	12213	12214	12215	12216	12217
195	12218	12219	12220	12221	12222	12223	12224	12225	12226	12227	12228	12229
196	12230	12231	12232	12233	12234	12235	12236	12237	12238	12239	12240	12241
197	12242	12243	12244	12245	12246	12247	12248	12249	12250	12251	12252	12253
198	12254	12255	12256	12257	12258	12259	12260	12261	12262	12263	12264	12265
199	12266	12267	12268	12269	12270	12271	12272	12273	12274	12275	12276	12277
200	12278	12279	12280	12281	12282	12283	12284	12285	12286	12287	12288	12289

Step	Target position		Cir. int. auxiliary point		Operation speed		Dwell time	M code	Sub. Axis setting	Helical int.	Circular int. turns	Control word
	Low	High	Low	High	Low	High						
201	12290	12291	12292	12293	12294	12295	12296	12297	12298	12299	12300	12301
202	12302	12303	12304	12305	12306	12307	12308	12309	12310	12311	12312	12313
203	12314	12315	12316	12317	12318	12319	12320	12321	12322	12323	12324	12325
204	12326	12327	12328	12329	12330	12331	12332	12333	12334	12335	12336	12337
205	12338	12339	12340	12341	12342	12343	12344	12345	12346	12347	12348	12349
206	12350	12351	12352	12353	12354	12355	12356	12357	12358	12359	12360	12361
207	12362	12363	12364	12365	12366	12367	12368	12369	12370	12371	12372	12373
208	12374	12375	12376	12377	12378	12379	12380	12381	12382	12383	12384	12385
209	12386	12387	12388	12389	12390	12391	12392	12393	12394	12395	12396	12397
210	12398	12399	12400	12401	12402	12403	12404	12405	12406	12407	12408	12409
211	12410	12411	12412	12413	12414	12415	12416	12417	12418	12419	12420	12421
212	12422	12423	12424	12425	12426	12427	12428	12429	12430	12431	12432	12433
213	12434	12435	12436	12437	12438	12439	12440	12441	12442	12443	12444	12445
214	12446	12447	12448	12449	12450	12451	12452	12453	12454	12455	12456	12457
215	12458	12459	12460	12461	12462	12463	12464	12465	12466	12467	12468	12469
216	12470	12471	12472	12473	12474	12475	12476	12477	12478	12479	12480	12481
217	12482	12483	12484	12485	12486	12487	12488	12489	12490	12491	12492	12493
218	12494	12495	12496	12497	12498	12499	12500	12501	12502	12503	12504	12505
219	12506	12507	12508	12509	12510	12511	12512	12513	12514	12515	12516	12517
220	12518	12519	12520	12521	12522	12523	12524	12525	12526	12527	12528	12529
221	12530	12531	12532	12533	12534	12535	12536	12537	12538	12539	12540	12541
222	12542	12543	12544	12545	12546	12547	12548	12549	12550	12551	12552	12553
223	12554	12555	12556	12557	12558	12559	12560	12561	12562	12563	12564	12565
224	12566	12567	12568	12569	12570	12571	12572	12573	12574	12575	12576	12577
225	12578	12579	12580	12581	12582	12583	12584	12585	12586	12587	12588	12589
226	12590	12591	12592	12593	12594	12595	12596	12597	12598	12599	12600	12601
227	12602	12603	12604	12605	12606	12607	12608	12609	12610	12611	12612	12613
228	12614	12615	12616	12617	12618	12619	12620	12621	12622	12623	12624	12625
229	12626	12627	12628	12629	12630	12631	12632	12633	12634	12635	12636	12637
230	12638	12639	12640	12641	12642	12643	12644	12645	12646	12647	12648	12649
231	12650	12651	12652	12653	12654	12655	12656	12657	12658	12659	12660	12661
232	12662	12663	12664	12665	12666	12667	12668	12669	12670	12671	12672	12673
233	12674	12675	12676	12677	12678	12679	12680	12681	12682	12683	12684	12685
234	12686	12687	12688	12689	12690	12691	12692	12693	12694	12695	12696	12697
235	12698	12699	12700	12701	12702	12703	12704	12705	12706	12707	12708	12709
236	12710	12711	12712	12713	12714	12715	12716	12717	12718	12719	12720	12721
237	12722	12723	12724	12725	12726	12727	12728	12729	12730	12731	12732	12733
238	12734	12735	12736	12737	12738	12739	12740	12741	12742	12743	12744	12745
239	12746	12747	12748	12749	12750	12751	12752	12753	12754	12755	12756	12757
240	12758	12759	12760	12761	12762	12763	12764	12765	12766	12767	12768	12769
241	12770	12771	12772	12773	12774	12775	12776	12777	12778	12779	12780	12781
242	12782	12783	12784	12785	12786	12787	12788	12789	12790	12791	12792	12793
243	12794	12795	12796	12797	12798	12799	12800	12801	12802	12803	12804	12805
244	12806	12807	12808	12809	12810	12811	12812	12813	12814	12815	12816	12817
245	12818	12819	12820	12821	12822	12823	12824	12825	12826	12827	12828	12829
246	12830	12831	12832	12833	12834	12835	12836	12837	12838	12839	12840	12841
247	12842	12843	12844	12845	12846	12847	12848	12849	12850	12851	12852	12853
248	12854	12855	12856	12857	12858	12859	12860	12861	12862	12863	12864	12865
249	12866	12867	12868	12869	12870	12871	12872	12873	12874	12875	12876	12877
250	12878	12879	12880	12881	12882	12883	12884	12885	12886	12887	12888	12889

Module Internal Memory Address of "Read/Write Variable Data" command

Step	Target position		Cir. int. auxiliary point		Operation speed		Dwell time	M code	Sub. Axis setting	Helical int.	Circular int. turns	Control word
	Low	High	Low	High	Low	High						
251	12890	12891	12892	12893	12894	12895	12896	12897	12898	12899	12900	12901
252	12902	12903	12904	12905	12906	12907	12908	12909	12910	12911	12912	12913
253	12914	12915	12916	12917	12918	12919	12920	12921	12922	12923	12924	12925
254	12926	12927	12928	12929	12930	12931	12932	12933	12934	12935	12936	12937
255	12938	12939	12940	12941	12942	12943	12944	12945	12946	12947	12948	12949
256	12950	12951	12952	12953	12954	12955	12956	12957	12958	12959	12960	12961
257	12962	12963	12964	12965	12966	12967	12968	12969	12970	12971	12972	12973
258	12974	12975	12976	12977	12978	12979	12980	12981	12982	12983	12984	12985
259	12986	12987	12988	12989	12990	12991	12992	12993	12994	12995	12996	12997
260	12998	12999	13000	13001	13002	13003	13004	13005	13006	13007	13008	13009
261	13010	13011	13012	13013	13014	13015	13016	13017	13018	13019	13020	13021
262	13022	13023	13024	13025	13026	13027	13028	13029	13030	13031	13032	13033
263	13034	13035	13036	13037	13038	13039	13040	13041	13042	13043	13044	13045
264	13046	13047	13048	13049	13050	13051	13052	13053	13054	13055	13056	13057
265	13058	13059	13060	13061	13062	13063	13064	13065	13066	13067	13068	13069
266	13070	13071	13072	13073	13074	13075	13076	13077	13078	13079	13080	13081
267	13082	13083	13084	13085	13086	13087	13088	13089	13090	13091	13092	13093
268	13094	13095	13096	13097	13098	13099	13100	13101	13102	13103	13104	13105
269	13106	13107	13108	13109	13110	13111	13112	13113	13114	13115	13116	13117
270	13118	13119	13120	13121	13122	13123	13124	13125	13126	13127	13128	13129
271	13130	13131	13132	13133	13134	13135	13136	13137	13138	13139	13140	13141
272	13142	13143	13144	13145	13146	13147	13148	13149	13150	13151	13152	13153
273	13154	13155	13156	13157	13158	13159	13160	13161	13162	13163	13164	13165
274	13166	13167	13168	13169	13170	13171	13172	13173	13174	13175	13176	13177
275	13178	13179	13180	13181	13182	13183	13184	13185	13186	13187	13188	13189
276	13190	13191	13192	13193	13194	13195	13196	13197	13198	13199	13200	13201
277	13202	13203	13204	13205	13206	13207	13208	13209	13210	13211	13212	13213
278	13214	13215	13216	13217	13218	13219	13220	13221	13222	13223	13224	13225
279	13226	13227	13228	13229	13230	13231	13232	13233	13234	13235	13236	13237
280	13238	13239	13240	13241	13242	13243	13244	13245	13246	13247	13248	13249
281	13250	13251	13252	13253	13254	13255	13256	13257	13258	13259	13260	13261
282	13262	13263	13264	13265	13266	13267	13268	13269	13270	13271	13272	13273
283	13274	13275	13276	13277	13278	13279	13280	13281	13282	13283	13284	13285
284	13286	13287	13288	13289	13290	13291	13292	13293	13294	13295	13296	13297
285	13298	13299	13300	13301	13302	13303	13304	13305	13306	13307	13308	13309
286	13310	13311	13312	13313	13314	13315	13316	13317	13318	13319	13320	13321
287	13322	13323	13324	13325	13326	13327	13328	13329	13330	13331	13332	13333
288	13334	13335	13336	13337	13338	13339	13340	13341	13342	13343	13344	13345
289	13346	13347	13348	13349	13350	13351	13352	13353	13354	13355	13356	13357
290	13358	13359	13360	13361	13362	13363	13364	13365	13366	13367	13368	13369
291	13370	13371	13372	13373	13374	13375	13376	13377	13378	13379	13380	13381
292	13382	13383	13384	13385	13386	13387	13388	13389	13390	13391	13392	13393
293	13394	13395	13396	13397	13398	13399	13400	13401	13402	13403	13404	13405
294	13406	13407	13408	13409	13410	13411	13412	13413	13414	13415	13416	13417
295	13418	13419	13420	13421	13422	13423	13424	13425	13426	13427	13428	13429
296	13430	13431	13432	13433	13434	13435	13436	13437	13438	13439	13440	13441
297	13442	13443	13444	13445	13446	13447	13448	13449	13450	13451	13452	13453
298	13454	13455	13456	13457	13458	13459	13460	13461	13462	13463	13464	13465
299	13466	13467	13468	13469	13470	13471	13472	13473	13474	13475	13476	13477
300	13478	13479	13480	13481	13482	13483	13484	13485	13486	13487	13488	13489

Step	Target position		Cir. int. auxiliary point		Operation speed		Dwell time	M code	Sub. Axis setting	Helical int.	Circular int. turns	Control word
	Low	High	Low	High	Low	High						
301	13490	13491	13492	13493	13494	13495	13496	13497	13498	13499	13500	13501
302	13502	13503	13504	13505	13506	13507	13508	13509	13510	13511	13512	13513
303	13514	13515	13516	13517	13518	13519	13520	13521	13522	13523	13524	13525
304	13526	13527	13528	13529	13530	13531	13532	13533	13534	13535	13536	13537
305	13538	13539	13540	13541	13542	13543	13544	13545	13546	13547	13548	13549
306	13550	13551	13552	13553	13554	13555	13556	13557	13558	13559	13560	13561
307	13562	13563	13564	13565	13566	13567	13568	13569	13570	13571	13572	13573
308	13574	13575	13576	13577	13578	13579	13580	13581	13582	13583	13584	13585
309	13586	13587	13588	13589	13590	13591	13592	13593	13594	13595	13596	13597
310	13598	13599	13600	13601	13602	13603	13604	13605	13606	13607	13608	13609
311	13610	13611	13612	13613	13614	13615	13616	13617	13618	13619	13620	13621
312	13622	13623	13624	13625	13626	13627	13628	13629	13630	13631	13632	13633
313	13634	13635	13636	13637	13638	13639	13640	13641	13642	13643	13644	13645
314	13646	13647	13648	13649	13650	13651	13652	13653	13654	13655	13656	13657
315	13658	13659	13660	13661	13662	13663	13664	13665	13666	13667	13668	13669
316	13670	13671	13672	13673	13674	13675	13676	13677	13678	13679	13680	13681
317	13682	13683	13684	13685	13686	13687	13688	13689	13690	13691	13692	13693
318	13694	13695	13696	13697	13698	13699	13700	13701	13702	13703	13704	13705
319	13706	13707	13708	13709	13710	13711	13712	13713	13714	13715	13716	13717
320	13718	13719	13720	13721	13722	13723	13724	13725	13726	13727	13728	13729
321	13730	13731	13732	13733	13734	13735	13736	13737	13738	13739	13740	13741
322	13742	13743	13744	13745	13746	13747	13748	13749	13750	13751	13752	13753
323	13754	13755	13756	13757	13758	13759	13760	13761	13762	13763	13764	13765
324	13766	13767	13768	13769	13770	13771	13772	13773	13774	13775	13776	13777
325	13778	13779	13780	13781	13782	13783	13784	13785	13786	13787	13788	13789
326	13790	13791	13792	13793	13794	13795	13796	13797	13798	13799	13800	13801
327	13802	13803	13804	13805	13806	13807	13808	13809	13810	13811	13812	13813
328	13814	13815	13816	13817	13818	13819	13820	13821	13822	13823	13824	13825
329	13826	13827	13828	13829	13830	13831	13832	13833	13834	13835	13836	13837
330	13838	13839	13840	13841	13842	13843	13844	13845	13846	13847	13848	13849
331	13850	13851	13852	13853	13854	13855	13856	13857	13858	13859	13860	13861
332	13862	13863	13864	13865	13866	13867	13868	13869	13870	13871	13872	13873
333	13874	13875	13876	13877	13878	13879	13880	13881	13882	13883	13884	13885
334	13886	13887	13888	13889	13890	13891	13892	13893	13894	13895	13896	13897
335	13898	13899	13900	13901	13902	13903	13904	13905	13906	13907	13908	13909
336	13910	13911	13912	13913	13914	13915	13916	13917	13918	13919	13920	13921
337	13922	13923	13924	13925	13926	13927	13928	13929	13930	13931	13932	13933
338	13934	13935	13936	13937	13938	13939	13940	13941	13942	13943	13944	13945
339	13946	13947	13948	13949	13950	13951	13952	13953	13954	13955	13956	13957
340	13958	13959	13960	13961	13962	13963	13964	13965	13966	13967	13968	13969
341	13970	13971	13972	13973	13974	13975	13976	13977	13978	13979	13980	13981
342	13982	13983	13984	13985	13986	13987	13988	13989	13990	13991	13992	13993
343	13994	13995	13996	13997	13998	13999	14000	14001	14002	14003	14004	14005
344	14006	14007	14008	14009	14010	14011	14012	14013	14014	14015	14016	14017
345	14018	14019	14020	14021	14022	14023	14024	14025	14026	14027	14028	14029
346	14030	14031	14032	14033	14034	14035	14036	14037	14038	14039	14040	14041
347	14042	14043	14044	14045	14046	14047	14048	14049	14050	14051	14052	14053
348	14054	14055	14056	14057	14058	14059	14060	14061	14062	14063	14064	14065
349	14066	14067	14068	14069	14070	14071	14072	14073	14074	14075	14076	14077
350	14078	14079	14080	14081	14082	14083	14084	14085	14086	14087	14088	14089

Module Internal Memory Address of "Read/Write Variable Data" command

Step	Target position		Cir. int. auxiliary point		Operation speed		Dwell time	M code	Sub. Axis setting	Helical int.	Circular int. turns	Control word
	Low	High	Low	High	Low	High						
351	14090	14091	14092	14093	14094	14095	14096	14097	14098	14099	14100	14101
352	14102	14103	14104	14105	14106	14107	14108	14109	14110	14111	14112	14113
353	14114	14115	14116	14117	14118	14119	14120	14121	14122	14123	14124	14125
354	14126	14127	14128	14129	14130	14131	14132	14133	14134	14135	14136	14137
355	14138	14139	14140	14141	14142	14143	14144	14145	14146	14147	14148	14149
356	14150	14151	14152	14153	14154	14155	14156	14157	14158	14159	14160	14161
357	14162	14163	14164	14165	14166	14167	14168	14169	14170	14171	14172	14173
358	14174	14175	14176	14177	14178	14179	14180	14181	14182	14183	14184	14185
359	14186	14187	14188	14189	14190	14191	14192	14193	14194	14195	14196	14197
360	14198	14199	14200	14201	14202	14203	14204	14205	14206	14207	14208	14209
361	14210	14211	14212	14213	14214	14215	14216	14217	14218	14219	14220	14221
362	14222	14223	14224	14225	14226	14227	14228	14229	14230	14231	14232	14233
363	14234	14235	14236	14237	14238	14239	14240	14241	14242	14243	14244	14245
364	14246	14247	14248	14249	14250	14251	14252	14253	14254	14255	14256	14257
365	14258	14259	14260	14261	14262	14263	14264	14265	14266	14267	14268	14269
366	14270	14271	14272	14273	14274	14275	14276	14277	14278	14279	14280	14281
367	14282	14283	14284	14285	14286	14287	14288	14289	14290	14291	14292	14293
368	14294	14295	14296	14297	14298	14299	14300	14301	14302	14303	14304	14305
369	14306	14307	14308	14309	14310	14311	14312	14313	14314	14315	14316	14317
370	14318	14319	14320	14321	14322	14323	14324	14325	14326	14327	14328	14329
371	14330	14331	14332	14333	14334	14335	14336	14337	14338	14339	14340	14341
372	14342	14343	14344	14345	14346	14347	14348	14349	14350	14351	14352	14353
373	14354	14355	14356	14357	14358	14359	14360	14361	14362	14363	14364	14365
374	14366	14367	14368	14369	14370	14371	14372	14373	14374	14375	14376	14377
375	14378	14379	14380	14381	14382	14383	14384	14385	14386	14387	14388	14389
376	14390	14391	14392	14393	14394	14395	14396	14397	14398	14399	14400	14401
377	14402	14403	14404	14405	14406	14407	14408	14409	14410	14411	14412	14413
378	14414	14415	14416	14417	14418	14419	14420	14421	14422	14423	14424	14425
379	14426	14427	14428	14429	14430	14431	14432	14433	14434	14435	14436	14437
380	14438	14439	14440	14441	14442	14443	14444	14445	14446	14447	14448	14449
381	14450	14451	14452	14453	14454	14455	14456	14457	14458	14459	14460	14461
382	14462	14463	14464	14465	14466	14467	14468	14469	14470	14471	14472	14473
383	14474	14475	14476	14477	14478	14479	14480	14481	14482	14483	14484	14485
384	14486	14487	14488	14489	14490	14491	14492	14493	14494	14495	14496	14497
385	14498	14499	14500	14501	14502	14503	14504	14505	14506	14507	14508	14509
386	14510	14511	14512	14513	14514	14515	14516	14517	14518	14519	14520	14521
387	14522	14523	14524	14525	14526	14527	14528	14529	14530	14531	14532	14533
388	14534	14535	14536	14537	14538	14539	14540	14541	14542	14543	14544	14545
389	14546	14547	14548	14549	14550	14551	14552	14553	14554	14555	14556	14557
390	14558	14559	14560	14561	14562	14563	14564	14565	14566	14567	14568	14569
391	14570	14571	14572	14573	14574	14575	14576	14577	14578	14579	14580	14581
392	14582	14583	14584	14585	14586	14587	14588	14589	14590	14591	14592	14593
393	14594	14595	14596	14597	14598	14599	14600	14601	14602	14603	14604	14605
394	14606	14607	14608	14609	14610	14611	14612	14613	14614	14615	14616	14617
395	14618	14619	14620	14621	14622	14623	14624	14625	14626	14627	14628	14629
396	14630	14631	14632	14633	14634	14635	14636	14637	14638	14639	14640	14641
397	14642	14643	14644	14645	14646	14647	14648	14649	14650	14651	14652	14653
398	14654	14655	14656	14657	14658	14659	14660	14661	14662	14663	14664	14665
399	14666	14667	14668	14669	14670	14671	14672	14673	14674	14675	14676	14677
400	14678	14679	14680	14681	14682	14683	14684	14685	14686	14687	14688	14689

Appendix 3.5 Axis 4 operation data memory address

Step	Target position		Cir. int. auxiliary point		Operation speed		Dwell time	M code	Sub. Axis setting	Helical int.	Circular int. turns	Control word
	Low	High	Low	High	Low	High						
1	14690	14691	14692	14693	14694	14695	14696	14697	14698	14699	14700	14701
2	14702	14703	14704	14705	14706	14707	14708	14709	14710	14711	14712	14713
3	14714	14715	14716	14717	14718	14719	14720	14721	14722	14723	14724	14725
4	14726	14727	14728	14729	14730	14731	14732	14733	14734	14735	14736	14737
5	14738	14739	14740	14741	14742	14743	14744	14745	14746	14747	14748	14749
6	14750	14751	14752	14753	14754	14755	14756	14757	14758	14759	14760	14761
7	14762	14763	14764	14765	14766	14767	14768	14769	14770	14771	14772	14773
8	14774	14775	14776	14777	14778	14779	14780	14781	14782	14783	14784	14785
9	14786	14787	14788	14789	14790	14791	14792	14793	14794	14795	14796	14797
10	14798	14799	14800	14801	14802	14803	14804	14805	14806	14807	14808	14809
11	14810	14811	14812	14813	14814	14815	14816	14817	14818	14819	14820	14821
12	14822	14823	14824	14825	14826	14827	14828	14829	14830	14831	14832	14833
13	14834	14835	14836	14837	14838	14839	14840	14841	14842	14843	14844	14845
14	14846	14847	14848	14849	14850	14851	14852	14853	14854	14855	14856	14857
15	14858	14859	14860	14861	14862	14863	14864	14865	14866	14867	14868	14869
16	14870	14871	14872	14873	14874	14875	14876	14877	14878	14879	14880	14881
17	14882	14883	14884	14885	14886	14887	14888	14889	14890	14891	14892	14893
18	14894	14895	14896	14897	14898	14899	14900	14901	14902	14903	14904	14905
19	14906	14907	14908	14909	14910	14911	14912	14913	14914	14915	14916	14917
20	14918	14919	14920	14921	14922	14923	14924	14925	14926	14927	14928	14929
21	14930	14931	14932	14933	14934	14935	14936	14937	14938	14939	14940	14941
22	14942	14943	14944	14945	14946	14947	14948	14949	14950	14951	14952	14953
23	14954	14955	14956	14957	14958	14959	14960	14961	14962	14963	14964	14965
24	14966	14967	14968	14969	14970	14971	14972	14973	14974	14975	14976	14977
25	14978	14979	14980	14981	14982	14983	14984	14985	14986	14987	14988	14989
26	14990	14991	14992	14993	14994	14995	14996	14997	14998	14999	15000	15001
27	15002	15003	15004	15005	15006	15007	15008	15009	15010	15011	15012	15013
28	15014	15015	15016	15017	15018	15019	15020	15021	15022	15023	15024	15025
29	15026	15027	15028	15029	15030	15031	15032	15033	15034	15035	15036	15037
30	15038	15039	15040	15041	15042	15043	15044	15045	15046	15047	15048	15049
31	15050	15051	15052	15053	15054	15055	15056	15057	15058	15059	15060	15061
32	15062	15063	15064	15065	15066	15067	15068	15069	15070	15071	15072	15073
33	15074	15075	15076	15077	15078	15079	15080	15081	15082	15083	15084	15085
34	15086	15087	15088	15089	15090	15091	15092	15093	15094	15095	15096	15097
35	15098	15099	15100	15101	15102	15103	15104	15105	15106	15107	15108	15109
36	15110	15111	15112	15113	15114	15115	15116	15117	15118	15119	15120	15121
37	15122	15123	15124	15125	15126	15127	15128	15129	15130	15131	15132	15133
38	15134	15135	15136	15137	15138	15139	15140	15141	15142	15143	15144	15145
39	15146	15147	15148	15149	15150	15151	15152	15153	15154	15155	15156	15157
40	15158	15159	15160	15161	15162	15163	15164	15165	15166	15167	15168	15169
41	15170	15171	15172	15173	15174	15175	15176	15177	15178	15179	15180	15181
42	15182	15183	15184	15185	15186	15187	15188	15189	15190	15191	15192	15193
43	15194	15195	15196	15197	15198	15199	15200	15201	15202	15203	15204	15205
44	15206	15207	15208	15209	15210	15211	15212	15213	15214	15215	15216	15217
45	15218	15219	15220	15221	15222	15223	15224	15225	15226	15227	15228	15229
46	15230	15231	15232	15233	15234	15235	15236	15237	15238	15239	15240	15241
47	15242	15243	15244	15245	15246	15247	15248	15249	15250	15251	15252	15253
48	15254	15255	15256	15257	15258	15259	15260	15261	15262	15263	15264	15265
49	15266	15267	15268	15269	15270	15271	15272	15273	15274	15275	15276	15277
50	15278	15279	15280	15281	15282	15283	15284	15285	15286	15287	15288	15289

Module Internal Memory Address of "Read/Write Variable Data" command

Step	Target position		Cir. int. auxiliary point		Operation speed		Dwell time	M code	Sub. Axis setting	Helical int.	Circular int. turns	Control word
	Low	High	Low	High	Low	High						
51	15290	15291	15292	15293	15294	15295	15296	15297	15298	15299	15300	15301
52	15302	15303	15304	15305	15306	15307	15308	15309	15310	15311	15312	15313
53	15314	15315	15316	15317	15318	15319	15320	15321	15322	15323	15324	15325
54	15326	15327	15328	15329	15330	15331	15332	15333	15334	15335	15336	15337
55	15338	15339	15340	15341	15342	15343	15344	15345	15346	15347	15348	15349
56	15350	15351	15352	15353	15354	15355	15356	15357	15358	15359	15360	15361
57	15362	15363	15364	15365	15366	15367	15368	15369	15370	15371	15372	15373
58	15374	15375	15376	15377	15378	15379	15380	15381	15382	15383	15384	15385
59	15386	15387	15388	15389	15390	15391	15392	15393	15394	15395	15396	15397
60	15398	15399	15400	15401	15402	15403	15404	15405	15406	15407	15408	15409
61	15410	15411	15412	15413	15414	15415	15416	15417	15418	15419	15420	15421
62	15422	15423	15424	15425	15426	15427	15428	15429	15430	15431	15432	15433
63	15434	15435	15436	15437	15438	15439	15440	15441	15442	15443	15444	15445
64	15446	15447	15448	15449	15450	15451	15452	15453	15454	15455	15456	15457
65	15458	15459	15460	15461	15462	15463	15464	15465	15466	15467	15468	15469
66	15470	15471	15472	15473	15474	15475	15476	15477	15478	15479	15480	15481
67	15482	15483	15484	15485	15486	15487	15488	15489	15490	15491	15492	15493
68	15494	15495	15496	15497	15498	15499	15500	15501	15502	15503	15504	15505
69	15506	15507	15508	15509	15510	15511	15512	15513	15514	15515	15516	15517
70	15518	15519	15520	15521	15522	15523	15524	15525	15526	15527	15528	15529
71	15530	15531	15532	15533	15534	15535	15536	15537	15538	15539	15540	15541
72	15542	15543	15544	15545	15546	15547	15548	15549	15550	15551	15552	15553
73	15554	15555	15556	15557	15558	15559	15560	15561	15562	15563	15564	15565
74	15566	15567	15568	15569	15570	15571	15572	15573	15574	15575	15576	15577
75	15578	15579	15580	15581	15582	15583	15584	15585	15586	15587	15588	15589
76	15590	15591	15592	15593	15594	15595	15596	15597	15598	15599	15600	15601
77	15602	15603	15604	15605	15606	15607	15608	15609	15610	15611	15612	15613
78	15614	15615	15616	15617	15618	15619	15620	15621	15622	15623	15624	15625
79	15626	15627	15628	15629	15630	15631	15632	15633	15634	15635	15636	15637
80	15638	15639	15640	15641	15642	15643	15644	15645	15646	15647	15648	15649
81	15650	15651	15652	15653	15654	15655	15656	15657	15658	15659	15660	15661
82	15662	15663	15664	15665	15666	15667	15668	15669	15670	15671	15672	15673
83	15674	15675	15676	15677	15678	15679	15680	15681	15682	15683	15684	15685
84	15686	15687	15688	15689	15690	15691	15692	15693	15694	15695	15696	15697
85	15698	15699	15700	15701	15702	15703	15704	15705	15706	15707	15708	15709
86	15710	15711	15712	15713	15714	15715	15716	15717	15718	15719	15720	15721
87	15722	15723	15724	15725	15726	15727	15728	15729	15730	15731	15732	15733
88	15734	15735	15736	15737	15738	15739	15740	15741	15742	15743	15744	15745
89	15746	15747	15748	15749	15750	15751	15752	15753	15754	15755	15756	15757
90	15758	15759	15760	15761	15762	15763	15764	15765	15766	15767	15768	15769
91	15770	15771	15772	15773	15774	15775	15776	15777	15778	15779	15780	15781
92	15782	15783	15784	15785	15786	15787	15788	15789	15790	15791	15792	15793
93	15794	15795	15796	15797	15798	15799	15800	15801	15802	15803	15804	15805
94	15806	15807	15808	15809	15810	15811	15812	15813	15814	15815	15816	15817
95	15818	15819	15820	15821	15822	15823	15824	15825	15826	15827	15828	15829
96	15830	15831	15832	15833	15834	15835	15836	15837	15838	15839	15840	15841
97	15842	15843	15844	15845	15846	15847	15848	15849	15850	15851	15852	15853
98	15854	15855	15856	15857	15858	15859	15860	15861	15862	15863	15864	15865
99	15866	15867	15868	15869	15870	15871	15872	15873	15874	15875	15876	15877
100	15878	15879	15880	15881	15882	15883	15884	15885	15886	15887	15888	15889

Step	Target position		Cir. int. auxiliary point		Operation speed		Dwell time	M code	Sub. Axis setting	Helical int.	Circular int. turns	Control word
	Low	High	Low	High	Low	High						
101	15890	15891	15892	15893	15894	15895	15896	15897	15898	15899	15900	15901
102	15902	15903	15904	15905	15906	15907	15908	15909	15910	15911	15912	15913
103	15914	15915	15916	15917	15918	15919	15920	15921	15922	15923	15924	15925
104	15926	15927	15928	15929	15930	15931	15932	15933	15934	15935	15936	15937
105	15938	15939	15940	15941	15942	15943	15944	15945	15946	15947	15948	15949
106	15950	15951	15952	15953	15954	15955	15956	15957	15958	15959	15960	15961
107	15962	15963	15964	15965	15966	15967	15968	15969	15970	15971	15972	15973
108	15974	15975	15976	15977	15978	15979	15980	15981	15982	15983	15984	15985
109	15986	15987	15988	15989	15990	15991	15992	15993	15994	15995	15996	15997
110	15998	15999	16000	16001	16002	16003	16004	16005	16006	16007	16008	16009
111	16010	16011	16012	16013	16014	16015	16016	16017	16018	16019	16020	16021
112	16022	16023	16024	16025	16026	16027	16028	16029	16030	16031	16032	16033
113	16034	16035	16036	16037	16038	16039	16040	16041	16042	16043	16044	16045
114	16046	16047	16048	16049	16050	16051	16052	16053	16054	16055	16056	16057
115	16058	16059	16060	16061	16062	16063	16064	16065	16066	16067	16068	16069
116	16070	16071	16072	16073	16074	16075	16076	16077	16078	16079	16080	16081
117	16082	16083	16084	16085	16086	16087	16088	16089	16090	16091	16092	16093
118	16094	16095	16096	16097	16098	16099	16100	16101	16102	16103	16104	16105
119	16106	16107	16108	16109	16110	16111	16112	16113	16114	16115	16116	16117
120	16118	16119	16120	16121	16122	16123	16124	16125	16126	16127	16128	16129
121	16130	16131	16132	16133	16134	16135	16136	16137	16138	16139	16140	16141
122	16142	16143	16144	16145	16146	16147	16148	16149	16150	16151	16152	16153
123	16154	16155	16156	16157	16158	16159	16160	16161	16162	16163	16164	16165
124	16166	16167	16168	16169	16170	16171	16172	16173	16174	16175	16176	16177
125	16178	16179	16180	16181	16182	16183	16184	16185	16186	16187	16188	16189
126	16190	16191	16192	16193	16194	16195	16196	16197	16198	16199	16200	16201
127	16202	16203	16204	16205	16206	16207	16208	16209	16210	16211	16212	16213
128	16214	16215	16216	16217	16218	16219	16220	16221	16222	16223	16224	16225
129	16226	16227	16228	16229	16230	16231	16232	16233	16234	16235	16236	16237
130	16238	16239	16240	16241	16242	16243	16244	16245	16246	16247	16248	16249
131	16250	16251	16252	16253	16254	16255	16256	16257	16258	16259	16260	16261
132	16262	16263	16264	16265	16266	16267	16268	16269	16270	16271	16272	16273
133	16274	16275	16276	16277	16278	16279	16280	16281	16282	16283	16284	16285
134	16286	16287	16288	16289	16290	16291	16292	16293	16294	16295	16296	16297
135	16298	16299	16300	16301	16302	16303	16304	16305	16306	16307	16308	16309
136	16310	16311	16312	16313	16314	16315	16316	16317	16318	16319	16320	16321
137	16322	16323	16324	16325	16326	16327	16328	16329	16330	16331	16332	16333
138	16334	16335	16336	16337	16338	16339	16340	16341	16342	16343	16344	16345
139	16346	16347	16348	16349	16350	16351	16352	16353	16354	16355	16356	16357
140	16358	16359	16360	16361	16362	16363	16364	16365	16366	16367	16368	16369
141	16370	16371	16372	16373	16374	16375	16376	16377	16378	16379	16380	16381
142	16382	16383	16384	16385	16386	16387	16388	16389	16390	16391	16392	16393
143	16394	16395	16396	16397	16398	16399	16400	16401	16402	16403	16404	16405
144	16406	16407	16408	16409	16410	16411	16412	16413	16414	16415	16416	16417
145	16418	16419	16420	16421	16422	16423	16424	16425	16426	16427	16428	16429
146	16430	16431	16432	16433	16434	16435	16436	16437	16438	16439	16440	16441
147	16442	16443	16444	16445	16446	16447	16448	16449	16450	16451	16452	16453
148	16454	16455	16456	16457	16458	16459	16460	16461	16462	16463	16464	16465
149	16466	16467	16468	16469	16470	16471	16472	16473	16474	16475	16476	16477
150	16478	16479	16480	16481	16482	16483	16484	16485	16486	16487	16488	16489

Module Internal Memory Address of "Read/Write Variable Data" command

Step	Target position		Cir. int. auxiliary point		Operation speed		Dwell time	M code	Sub. Axis setting	Helical int.	Circular int. turns	Control word
	Low	High	Low	High	Low	High						
151	16490	16491	16492	16493	16494	16495	16496	16497	16498	16499	16500	16501
152	16502	16503	16504	16505	16506	16507	16508	16509	16510	16511	16512	16513
153	16514	16515	16516	16517	16518	16519	16520	16521	16522	16523	16524	16525
154	16526	16527	16528	16529	16530	16531	16532	16533	16534	16535	16536	16537
155	16538	16539	16540	16541	16542	16543	16544	16545	16546	16547	16548	16549
156	16550	16551	16552	16553	16554	16555	16556	16557	16558	16559	16560	16561
157	16562	16563	16564	16565	16566	16567	16568	16569	16570	16571	16572	16573
158	16574	16575	16576	16577	16578	16579	16580	16581	16582	16583	16584	16585
159	16586	16587	16588	16589	16590	16591	16592	16593	16594	16595	16596	16597
160	16598	16599	16600	16601	16602	16603	16604	16605	16606	16607	16608	16609
161	16610	16611	16612	16613	16614	16615	16616	16617	16618	16619	16620	16621
162	16622	16623	16624	16625	16626	16627	16628	16629	16630	16631	16632	16633
163	16634	16635	16636	16637	16638	16639	16640	16641	16642	16643	16644	16645
164	16646	16647	16648	16649	16650	16651	16652	16653	16654	16655	16656	16657
165	16658	16659	16660	16661	16662	16663	16664	16665	16666	16667	16668	16669
166	16670	16671	16672	16673	16674	16675	16676	16677	16678	16679	16680	16681
167	16682	16683	16684	16685	16686	16687	16688	16689	16690	16691	16692	16693
168	16694	16695	16696	16697	16698	16699	16700	16701	16702	16703	16704	16705
169	16706	16707	16708	16709	16710	16711	16712	16713	16714	16715	16716	16717
170	16718	16719	16720	16721	16722	16723	16724	16725	16726	16727	16728	16729
171	16730	16731	16732	16733	16734	16735	16736	16737	16738	16739	16740	16741
172	16742	16743	16744	16745	16746	16747	16748	16749	16750	16751	16752	16753
173	16754	16755	16756	16757	16758	16759	16760	16761	16762	16763	16764	16765
174	16766	16767	16768	16769	16770	16771	16772	16773	16774	16775	16776	16777
175	16778	16779	16780	16781	16782	16783	16784	16785	16786	16787	16788	16789
176	16790	16791	16792	16793	16794	16795	16796	16797	16798	16799	16800	16801
177	16802	16803	16804	16805	16806	16807	16808	16809	16810	16811	16812	16813
178	16814	16815	16816	16817	16818	16819	16820	16821	16822	16823	16824	16825
179	16826	16827	16828	16829	16830	16831	16832	16833	16834	16835	16836	16837
180	16838	16839	16840	16841	16842	16843	16844	16845	16846	16847	16848	16849
181	16850	16851	16852	16853	16854	16855	16856	16857	16858	16859	16860	16861
182	16862	16863	16864	16865	16866	16867	16868	16869	16870	16871	16872	16873
183	16874	16875	16876	16877	16878	16879	16880	16881	16882	16883	16884	16885
184	16886	16887	16888	16889	16890	16891	16892	16893	16894	16895	16896	16897
185	16898	16899	16900	16901	16902	16903	16904	16905	16906	16907	16908	16909
186	16910	16911	16912	16913	16914	16915	16916	16917	16918	16919	16920	16921
187	16922	16923	16924	16925	16926	16927	16928	16929	16930	16931	16932	16933
188	16934	16935	16936	16937	16938	16939	16940	16941	16942	16943	16944	16945
189	16946	16947	16948	16949	16950	16951	16952	16953	16954	16955	16956	16957
190	16958	16959	16960	16961	16962	16963	16964	16965	16966	16967	16968	16969
191	16970	16971	16972	16973	16974	16975	16976	16977	16978	16979	16980	16981
192	16982	16983	16984	16985	16986	16987	16988	16989	16990	16991	16992	16993
193	16994	16995	16996	16997	16998	16999	17000	17001	17002	17003	17004	17005
194	17006	17007	17008	17009	17010	17011	17012	17013	17014	17015	17016	17017
195	17018	17019	17020	17021	17022	17023	17024	17025	17026	17027	17028	17029
196	17030	17031	17032	17033	17034	17035	17036	17037	17038	17039	17040	17041
197	17042	17043	17044	17045	17046	17047	17048	17049	17050	17051	17052	17053
198	17054	17055	17056	17057	17058	17059	17060	17061	17062	17063	17064	17065
199	17066	17067	17068	17069	17070	17071	17072	17073	17074	17075	17076	17077
200	17078	17079	17080	17081	17082	17083	17084	17085	17086	17087	17088	17089

Step	Target position		Cir. int. auxiliary point		Operation speed		Dwell time	M code	Sub. Axis setting	Helical int.	Circular int. turns	Control word
	Low	High	Low	High	Low	High						
201	17090	17091	17092	17093	17094	17095	17096	17097	17098	17099	17100	17101
202	17102	17103	17104	17105	17106	17107	17108	17109	17110	17111	17112	17113
203	17114	17115	17116	17117	17118	17119	17120	17121	17122	17123	17124	17125
204	17126	17127	17128	17129	17130	17131	17132	17133	17134	17135	17136	17137
205	17138	17139	17140	17141	17142	17143	17144	17145	17146	17147	17148	17149
206	17150	17151	17152	17153	17154	17155	17156	17157	17158	17159	17160	17161
207	17162	17163	17164	17165	17166	17167	17168	17169	17170	17171	17172	17173
208	17174	17175	17176	17177	17178	17179	17180	17181	17182	17183	17184	17185
209	17186	17187	17188	17189	17190	17191	17192	17193	17194	17195	17196	17197
210	17198	17199	17200	17201	17202	17203	17204	17205	17206	17207	17208	17209
211	17210	17211	17212	17213	17214	17215	17216	17217	17218	17219	17220	17221
212	17222	17223	17224	17225	17226	17227	17228	17229	17230	17231	17232	17233
213	17234	17235	17236	17237	17238	17239	17240	17241	17242	17243	17244	17245
214	17246	17247	17248	17249	17250	17251	17252	17253	17254	17255	17256	17257
215	17258	17259	17260	17261	17262	17263	17264	17265	17266	17267	17268	17269
216	17270	17271	17272	17273	17274	17275	17276	17277	17278	17279	17280	17281
217	17282	17283	17284	17285	17286	17287	17288	17289	17290	17291	17292	17293
218	17294	17295	17296	17297	17298	17299	17300	17301	17302	17303	17304	17305
219	17306	17307	17308	17309	17310	17311	17312	17313	17314	17315	17316	17317
220	17318	17319	17320	17321	17322	17323	17324	17325	17326	17327	17328	17329
221	17330	17331	17332	17333	17334	17335	17336	17337	17338	17339	17340	17341
222	17342	17343	17344	17345	17346	17347	17348	17349	17350	17351	17352	17353
223	17354	17355	17356	17357	17358	17359	17360	17361	17362	17363	17364	17365
224	17366	17367	17368	17369	17370	17371	17372	17373	17374	17375	17376	17377
225	17378	17379	17380	17381	17382	17383	17384	17385	17386	17387	17388	17389
226	17390	17391	17392	17393	17394	17395	17396	17397	17398	17399	17400	17401
227	17402	17403	17404	17405	17406	17407	17408	17409	17410	17411	17412	17413
228	17414	17415	17416	17417	17418	17419	17420	17421	17422	17423	17424	17425
229	17426	17427	17428	17429	17430	17431	17432	17433	17434	17435	17436	17437
230	17438	17439	17440	17441	17442	17443	17444	17445	17446	17447	17448	17449
231	17450	17451	17452	17453	17454	17455	17456	17457	17458	17459	17460	17461
232	17462	17463	17464	17465	17466	17467	17468	17469	17470	17471	17472	17473
233	17474	17475	17476	17477	17478	17479	17480	17481	17482	17483	17484	17485
234	17486	17487	17488	17489	17490	17491	17492	17493	17494	17495	17496	17497
235	17498	17499	17500	17501	17502	17503	17504	17505	17506	17507	17508	17509
236	17510	17511	17512	17513	17514	17515	17516	17517	17518	17519	17520	17521
237	17522	17523	17524	17525	17526	17527	17528	17529	17530	17531	17532	17533
238	17534	17535	17536	17537	17538	17539	17540	17541	17542	17543	17544	17545
239	17546	17547	17548	17549	17550	17551	17552	17553	17554	17555	17556	17557
240	17558	17559	17560	17561	17562	17563	17564	17565	17566	17567	17568	17569
241	17570	17571	17572	17573	17574	17575	17576	17577	17578	17579	17580	17581
242	17582	17583	17584	17585	17586	17587	17588	17589	17590	17591	17592	17593
243	17594	17595	17596	17597	17598	17599	17600	17601	17602	17603	17604	17605
244	17606	17607	17608	17609	17610	17611	17612	17613	17614	17615	17616	17617
245	17618	17619	17620	17621	17622	17623	17624	17625	17626	17627	17628	17629
246	17630	17631	17632	17633	17634	17635	17636	17637	17638	17639	17640	17641
247	17642	17643	17644	17645	17646	17647	17648	17649	17650	17651	17652	17653
248	17654	17655	17656	17657	17658	17659	17660	17661	17662	17663	17664	17665
249	17666	17667	17668	17669	17670	17671	17672	17673	17674	17675	17676	17677
250	17678	17679	17680	17681	17682	17683	17684	17685	17686	17687	17688	17689

Step	Target position		Cir. int. auxiliary point		Operation speed		Dwell time	M code	Sub. Axis setting	Helical int.	Circular int. turns	Control word
	Low	High	Low	High	Low	High						
251	17690	17691	17692	17693	17694	17695	17696	17697	17698	17699	17700	17701
252	17702	17703	17704	17705	17706	17707	17708	17709	17710	17711	17712	17713
253	17714	17715	17716	17717	17718	17719	17720	17721	17722	17723	17724	17725
254	17726	17727	17728	17729	17730	17731	17732	17733	17734	17735	17736	17737
255	17738	17739	17740	17741	17742	17743	17744	17745	17746	17747	17748	17749
256	17750	17751	17752	17753	17754	17755	17756	17757	17758	17759	17760	17761
257	17762	17763	17764	17765	17766	17767	17768	17769	17770	17771	17772	17773
258	17774	17775	17776	17777	17778	17779	17780	17781	17782	17783	17784	17785
259	17786	17787	17788	17789	17790	17791	17792	17793	17794	17795	17796	17797
260	17798	17799	17800	17801	17802	17803	17804	17805	17806	17807	17808	17809
261	17810	17811	17812	17813	17814	17815	17816	17817	17818	17819	17820	17821
262	17822	17823	17824	17825	17826	17827	17828	17829	17830	17831	17832	17833
263	17834	17835	17836	17837	17838	17839	17840	17841	17842	17843	17844	17845
264	17846	17847	17848	17849	17850	17851	17852	17853	17854	17855	17856	17857
265	17858	17859	17860	17861	17862	17863	17864	17865	17866	17867	17868	17869
266	17870	17871	17872	17873	17874	17875	17876	17877	17878	17879	17880	17881
267	17882	17883	17884	17885	17886	17887	17888	17889	17890	17891	17892	17893
268	17894	17895	17896	17897	17898	17899	17900	17901	17902	17903	17904	17905
269	17906	17907	17908	17909	17910	17911	17912	17913	17914	17915	17916	17917
270	17918	17919	17920	17921	17922	17923	17924	17925	17926	17927	17928	17929
271	17930	17931	17932	17933	17934	17935	17936	17937	17938	17939	17940	17941
272	17942	17943	17944	17945	17946	17947	17948	17949	17950	17951	17952	17953
273	17954	17955	17956	17957	17958	17959	17960	17961	17962	17963	17964	17965
274	17966	17967	17968	17969	17970	17971	17972	17973	17974	17975	17976	17977
275	17978	17979	17980	17981	17982	17983	17984	17985	17986	17987	17988	17989
276	17990	17991	17992	17993	17994	17995	17996	17997	17998	17999	18000	18001
277	18002	18003	18004	18005	18006	18007	18008	18009	18010	18011	18012	18013
278	18014	18015	18016	18017	18018	18019	18020	18021	18022	18023	18024	18025
279	18026	18027	18028	18029	18030	18031	18032	18033	18034	18035	18036	18037
280	18038	18039	18040	18041	18042	18043	18044	18045	18046	18047	18048	18049
281	18050	18051	18052	18053	18054	18055	18056	18057	18058	18059	18060	18061
282	18062	18063	18064	18065	18066	18067	18068	18069	18070	18071	18072	18073
283	18074	18075	18076	18077	18078	18079	18080	18081	18082	18083	18084	18085
284	18086	18087	18088	18089	18090	18091	18092	18093	18094	18095	18096	18097
285	18098	18099	18100	18101	18102	18103	18104	18105	18106	18107	18108	18109
286	18110	18111	18112	18113	18114	18115	18116	18117	18118	18119	18120	18121
287	18122	18123	18124	18125	18126	18127	18128	18129	18130	18131	18132	18133
288	18134	18135	18136	18137	18138	18139	18140	18141	18142	18143	18144	18145
289	18146	18147	18148	18149	18150	18151	18152	18153	18154	18155	18156	18157
290	18158	18159	18160	18161	18162	18163	18164	18165	18166	18167	18168	18169
291	18170	18171	18172	18173	18174	18175	18176	18177	18178	18179	18180	18181
292	18182	18183	18184	18185	18186	18187	18188	18189	18190	18191	18192	18193
293	18194	18195	18196	18197	18198	18199	18200	18201	18202	18203	18204	18205
294	18206	18207	18208	18209	18210	18211	18212	18213	18214	18215	18216	18217
295	18218	18219	18220	18221	18222	18223	18224	18225	18226	18227	18228	18229
296	18230	18231	18232	18233	18234	18235	18236	18237	18238	18239	18240	18241
297	18242	18243	18244	18245	18246	18247	18248	18249	18250	18251	18252	18253
298	18254	18255	18256	18257	18258	18259	18260	18261	18262	18263	18264	18265
299	18266	18267	18268	18269	18270	18271	18272	18273	18274	18275	18276	18277
300	18278	18279	18280	18281	18282	18283	18284	18285	18286	18287	18288	18289

Step	Target position		Cir. int. auxiliary point		Operation speed		Dwell time	M code	Sub. Axis setting	Helical int.	Circular int. turns	Control word
	Low	High	Low	High	Low	High						
301	18290	18291	18292	18293	18294	18295	18296	18297	18298	18299	18300	18301
302	18302	18303	18304	18305	18306	18307	18308	18309	18310	18311	18312	18313
303	18314	18315	18316	18317	18318	18319	18320	18321	18322	18323	18324	18325
304	18326	18327	18328	18329	18330	18331	18332	18333	18334	18335	18336	18337
305	18338	18339	18340	18341	18342	18343	18344	18345	18346	18347	18348	18349
306	18350	18351	18352	18353	18354	18355	18356	18357	18358	18359	18360	18361
307	18362	18363	18364	18365	18366	18367	18368	18369	18370	18371	18372	18373
308	18374	18375	18376	18377	18378	18379	18380	18381	18382	18383	18384	18385
309	18386	18387	18388	18389	18390	18391	18392	18393	18394	18395	18396	18397
310	18398	18399	18400	18401	18402	18403	18404	18405	18406	18407	18408	18409
311	18410	18411	18412	18413	18414	18415	18416	18417	18418	18419	18420	18421
312	18422	18423	18424	18425	18426	18427	18428	18429	18430	18431	18432	18433
313	18434	18435	18436	18437	18438	18439	18440	18441	18442	18443	18444	18445
314	18446	18447	18448	18449	18450	18451	18452	18453	18454	18455	18456	18457
315	18458	18459	18460	18461	18462	18463	18464	18465	18466	18467	18468	18469
316	18470	18471	18472	18473	18474	18475	18476	18477	18478	18479	18480	18481
317	18482	18483	18484	18485	18486	18487	18488	18489	18490	18491	18492	18493
318	18494	18495	18496	18497	18498	18499	18500	18501	18502	18503	18504	18505
319	18506	18507	18508	18509	18510	18511	18512	18513	18514	18515	18516	18517
320	18518	18519	18520	18521	18522	18523	18524	18525	18526	18527	18528	18529
321	18530	18531	18532	18533	18534	18535	18536	18537	18538	18539	18540	18541
322	18542	18543	18544	18545	18546	18547	18548	18549	18550	18551	18552	18553
323	18554	18555	18556	18557	18558	18559	18560	18561	18562	18563	18564	18565
324	18566	18567	18568	18569	18570	18571	18572	18573	18574	18575	18576	18577
325	18578	18579	18580	18581	18582	18583	18584	18585	18586	18587	18588	18589
326	18590	18591	18592	18593	18594	18595	18596	18597	18598	18599	18600	18601
327	18602	18603	18604	18605	18606	18607	18608	18609	18610	18611	18612	18613
328	18614	18615	18616	18617	18618	18619	18620	18621	18622	18623	18624	18625
329	18626	18627	18628	18629	18630	18631	18632	18633	18634	18635	18636	18637
330	18638	18639	18640	18641	18642	18643	18644	18645	18646	18647	18648	18649
331	18650	18651	18652	18653	18654	18655	18656	18657	18658	18659	18660	18661
332	18662	18663	18664	18665	18666	18667	18668	18669	18670	18671	18672	18673
333	18674	18675	18676	18677	18678	18679	18680	18681	18682	18683	18684	18685
334	18686	18687	18688	18689	18690	18691	18692	18693	18694	18695	18696	18697
335	18698	18699	18700	18701	18702	18703	18704	18705	18706	18707	18708	18709
336	18710	18711	18712	18713	18714	18715	18716	18717	18718	18719	18720	18721
337	18722	18723	18724	18725	18726	18727	18728	18729	18730	18731	18732	18733
338	18734	18735	18736	18737	18738	18739	18740	18741	18742	18743	18744	18745
339	18746	18747	18748	18749	18750	18751	18752	18753	18754	18755	18756	18757
340	18758	18759	18760	18761	18762	18763	18764	18765	18766	18767	18768	18769
341	18770	18771	18772	18773	18774	18775	18776	18777	18778	18779	18780	18781
342	18782	18783	18784	18785	18786	18787	18788	18789	18790	18791	18792	18793
343	18794	18795	18796	18797	18798	18799	18800	18801	18802	18803	18804	18805
344	18806	18807	18808	18809	18810	18811	18812	18813	18814	18815	18816	18817
345	18818	18819	18820	18821	18822	18823	18824	18825	18826	18827	18828	18829
346	18830	18831	18832	18833	18834	18835	18836	18837	18838	18839	18840	18841
347	18842	18843	18844	18845	18846	18847	18848	18849	18850	18851	18852	18853
348	18854	18855	18856	18857	18858	18859	18860	18861	18862	18863	18864	18865
349	18866	18867	18868	18869	18870	18871	18872	18873	18874	18875	18876	18877
350	18878	18879	18880	18881	18882	18883	18884	18885	18886	18887	18888	18889

Module Internal Memory Address of "Read/Write Variable Data" command

Step	Target position		Cir. int. auxiliary point		Operation speed		Dwell time	M code	Sub. Axis setting	Helical int.	Circular int. turns	Control word
	Low	High	Low	High	Low	High						
351	18890	18891	18892	18893	18894	18895	18896	18897	18898	18899	18900	18901
352	18902	18903	18904	18905	18906	18907	18908	18909	18910	18911	18912	18913
353	18914	18915	18916	18917	18918	18919	18920	18921	18922	18923	18924	18925
354	18926	18927	18928	18929	18930	18931	18932	18933	18934	18935	18936	18937
355	18938	18939	18940	18941	18942	18943	18944	18945	18946	18947	18948	18949
356	18950	18951	18952	18953	18954	18955	18956	18957	18958	18959	18960	18961
357	18962	18963	18964	18965	18966	18967	18968	18969	18970	18971	18972	18973
358	18974	18975	18976	18977	18978	18979	18980	18981	18982	18983	18984	18985
359	18986	18987	18988	18989	18990	18991	18992	18993	18994	18995	18996	18997
360	18998	18999	19000	19001	19002	19003	19004	19005	19006	19007	19008	19009
361	19010	19011	19012	19013	19014	19015	19016	19017	19018	19019	19020	19021
362	19022	19023	19024	19025	19026	19027	19028	19029	19030	19031	19032	19033
363	19034	19035	19036	19037	19038	19039	19040	19041	19042	19043	19044	19045
364	19046	19047	19048	19049	19050	19051	19052	19053	19054	19055	19056	19057
365	19058	19059	19060	19061	19062	19063	19064	19065	19066	19067	19068	19069
366	19070	19071	19072	19073	19074	19075	19076	19077	19078	19079	19080	19081
367	19082	19083	19084	19085	19086	19087	19088	19089	19090	19091	19092	19093
368	19094	19095	19096	19097	19098	19099	19100	19101	19102	19103	19104	19105
369	19106	19107	19108	19109	19110	19111	19112	19113	19114	19115	19116	19117
370	19118	19119	19120	19121	19122	19123	19124	19125	19126	19127	19128	19129
371	19130	19131	19132	19133	19134	19135	19136	19137	19138	19139	19140	19141
372	19142	19143	19144	19145	19146	19147	19148	19149	19150	19151	19152	19153
373	19154	19155	19156	19157	19158	19159	19160	19161	19162	19163	19164	19165
374	19166	19167	19168	19169	19170	19171	19172	19173	19174	19175	19176	19177
375	19178	19179	19180	19181	19182	19183	19184	19185	19186	19187	19188	19189
376	19190	19191	19192	19193	19194	19195	19196	19197	19198	19199	19200	19201
377	19202	19203	19204	19205	19206	19207	19208	19209	19210	19211	19212	19213
378	19214	19215	19216	19217	19218	19219	19220	19221	19222	19223	19224	19225
379	19226	19227	19228	19229	19230	19231	19232	19233	19234	19235	19236	19237
380	19238	19239	19240	19241	19242	19243	19244	19245	19246	19247	19248	19249
381	19250	19251	19252	19253	19254	19255	19256	19257	19258	19259	19260	19261
382	19262	19263	19264	19265	19266	19267	19268	19269	19270	19271	19272	19273
383	19274	19275	19276	19277	19278	19279	19280	19281	19282	19283	19284	19285
384	19286	19287	19288	19289	19290	19291	19292	19293	19294	19295	19296	19297
385	19298	19299	19300	19301	19302	19303	19304	19305	19306	19307	19308	19309
386	19310	19311	19312	19313	19314	19315	19316	19317	19318	19319	19320	19321
387	19322	19323	19324	19325	19326	19327	19328	19329	19330	19331	19332	19333
388	19334	19335	19336	19337	19338	19339	19340	19341	19342	19343	19344	19345
389	19346	19347	19348	19349	19350	19351	19352	19353	19354	19355	19356	19357
390	19358	19359	19360	19361	19362	19363	19364	19365	19366	19367	19368	19369
391	19370	19371	19372	19373	19374	19375	19376	19377	19378	19379	19380	19381
392	19382	19383	19384	19385	19386	19387	19388	19389	19390	19391	19392	19393
393	19394	19395	19396	19397	19398	19399	19400	19401	19402	19403	19404	19405
394	19406	19407	19408	19409	19410	19411	19412	19413	19414	19415	19416	19417
395	19418	19419	19420	19421	19422	19423	19424	19425	19426	19427	19428	19429
396	19430	19431	19432	19433	19434	19435	19436	19437	19438	19439	19440	19441
397	19442	19443	19444	19445	19446	19447	19448	19449	19450	19451	19452	19453
398	19454	19455	19456	19457	19458	19459	19460	19461	19462	19463	19464	19465
399	19466	19467	19468	19469	19470	19471	19472	19473	19474	19475	19476	19477
400	19478	19479	19480	19481	19482	19483	19484	19485	19486	19487	19488	19489

(1) Control word

Bit position	Contents
Coordinate (bit 0)	0: absolute, 1: incremental
Control method (bit 1~3)	0: single axis position control, 1: single axis speed control, 2: single axis Feed control, 3: linear interpolation, 4: circular interpolation
Operation method (bit 4)	0: single, 1: repeat
Operation pattern (bit 5~6)	0: end, 1: keep, 2: continue
Arc size (bit 7)	0: Arc<180 1: Arc>=180
Accel. No. (bit 8~9)	0 ~ 3
Decel. No. (bit 10~11)	0 ~ 3
Cir. int. mode (bit 12~13)	0: Middle-point, 1: Center-point, 2: Radius
Cir. int. direction (bit 14)	0:CW, 1:CCW

Appendix 3.6 CAM data memory address

		Block 1	Block 2	Block 3	Block 4	Block 5	Block 6	Block 7	Block 8
Main axis travel distance per rotation		19490	23720	27950	32180	36410	40640	44870	49100
Main axis pulse per rotation		19492	23722	27952	32182	36412	40642	44872	49102
Sub axis travel distance per rotation		19494	23724	27954	32184	36414	40644	44874	49104
Sub axis pulse per rotation		19496	23726	27956	32186	36416	40646	44876	49106
CAM Data End Step(WORD)		19498	23728	27958	32188	36418	40648	44878	49108
CAM Data Info(WORD) Bit 0~1 : main axis unit Bit 2~3 : Sub axis unit Bit 8 : CAM mode (0: repeat,1: increase)		19499	23729	27959	32189	36419	40649	44879	49109
User Data[0]	Main axis end pos.	19500	23730	27960	32190	36420	40650	44880	49110
	Sub axis end pos.	19502	23732	27962	32192	36422	40652	44882	49112
	CAM Curve	19504	23734	27964	32194	36424	40654	44884	49114
User Data[1]	Main axis end pos.	19506	23736	27966	32196	36426	40656	44886	49116
	Sub axis end pos.	19508	23738	27968	32198	36428	40658	44888	49118
	CAM Curve	19510	23740	27970	32200	36430	40660	44890	49120
User Data[2]	Main axis end pos.	19512	23742	27972	32202	36432	40662	44892	49122
	Sub axis end pos.	19514	23744	27974	32204	36434	40664	44894	49124
	CAM Curve	19516	23746	27976	32206	36436	40666	44896	49126
User Data[3]	Main axis end pos.	19518	23748	27978	32208	36438	40668	44898	49128
	Sub axis end pos.	19520	23750	27980	32210	36440	40670	44900	49130
	CAM Curve	19522	23752	27982	32212	36442	40672	44902	49132
User Data[4]	Main axis end pos.	19524	23754	27984	32214	36444	40674	44904	49134
	Sub axis end pos.	19526	23756	27986	32216	36446	40676	44906	49136
	CAM Curve	19528	23758	27988	32218	36448	40678	44908	49138
User Data[5]	Main axis end pos.	19530	23760	27990	32220	36450	40680	44910	49140
	Sub axis end pos.	19532	23762	27992	32222	36452	40682	44912	49142
	CAM Curve	19534	23764	27994	32224	36454	40684	44914	49144
User Data[6]	Main axis end pos.	19536	23766	27996	32226	36456	40686	44916	49146
	Sub axis end pos.	19538	23768	27998	32228	36458	40688	44918	49148
	CAM Curve	19540	23770	28000	32230	36460	40690	44920	49150
User Data[7]	Main axis end pos.	19542	23772	28002	32232	36462	40692	44922	49152
	Sub axis end pos.	19544	23774	28004	32234	36464	40694	44924	49154
	CAM Curve	19546	23776	28006	32236	36466	40696	44926	49156
User Data[8]	Main axis end pos.	19548	23778	28008	32238	36468	40698	44928	49158
	Sub axis end pos.	19550	23780	28010	32240	36470	40700	44930	49160
	CAM Curve	19552	23782	28012	32242	36472	40702	44932	49162
User Data[9]	Main axis end pos.	19554	23784	28014	32244	36474	40704	44934	49164
	Sub axis end pos.	19556	23786	28016	32246	36476	40706	44936	49166
	CAM Curve	19558	23788	28018	32248	36478	40708	44938	49168
User Data[10]	Main axis end pos.	19560	23790	28020	32250	36480	40710	44940	49170
	Sub axis end pos.	19562	23792	28022	32252	36482	40712	44942	49172
	CAM Curve	19564	23794	28024	32254	36484	40714	44944	49174

		Block 1	Block 2	Block 3	Block 4	Block 5	Block 6	Block 7	Block 8
User Data[11]	Main axis end pos.	19566	23796	28026	32256	36486	40716	44946	49176
	Sub axis end pos.	19568	23798	28028	32258	36488	40718	44948	49178
	CAM Curve	19570	23800	28030	32260	36490	40720	44950	49180
User Data[12]	Main axis end pos.	19572	23802	28032	32262	36492	40722	44952	49182
	Sub axis end pos.	19574	23804	28034	32264	36494	40724	44954	49184
	CAM Curve	19576	23806	28036	32266	36496	40726	44956	49186
User Data[13]	Main axis end pos.	19578	23808	28038	32268	36498	40728	44958	49188
	Sub axis end pos.	19580	23810	28040	32270	36500	40730	44960	49190
	CAM Curve	19582	23812	28042	32272	36502	40732	44962	49192
User Data[14]	Main axis end pos.	19584	23814	28044	32274	36504	40734	44964	49194
	Sub axis end pos.	19586	23816	28046	32276	36506	40736	44966	49196
	CAM Curve	19588	23818	28048	32278	36508	40738	44968	49198
User Data[15]	Main axis end pos.	19590	23820	28050	32280	36510	40740	44970	49200
	Sub axis end pos.	19592	23822	28052	32282	36512	40742	44972	49202
	CAM Curve	19594	23824	28054	32284	36514	40744	44974	49204
User Data[16]	Main axis end pos.	19596	23826	28056	32286	36516	40746	44976	49206
	Sub axis end pos.	19598	23828	28058	32288	36518	40748	44978	49208
	CAM Curve	19600	23830	28060	32290	36520	40750	44980	49210
User Data[17]	Main axis end pos.	19602	23832	28062	32292	36522	40752	44982	49212
	Sub axis end pos.	19604	23834	28064	32294	36524	40754	44984	49214
	CAM Curve	19606	23836	28066	32296	36526	40756	44986	49216
User Data[18]	Main axis end pos.	19608	23838	28068	32298	36528	40758	44988	49218
	Sub axis end pos.	19610	23840	28070	32300	36530	40760	44990	49220
	CAM Curve	19612	23842	28072	32302	36532	40762	44992	49222
User Data[19]	Main axis end pos.	19614	23844	28074	32304	36534	40764	44994	49224
	Sub axis end pos.	19616	23846	28076	32306	36536	40766	44996	49226
	CAM Curve	19618	23848	28078	32308	36538	40768	44998	49228
Step Offset		19620	23850	28080	32310	36540	40770	45000	49230
Total_Length		19622	23852	28082	32312	36542	40772	45002	49232
CAM Data[0]		19624	23854	28084	32314	36544	40774	45004	49234
CAM Data[1]		19626	23856	28086	32316	36546	40776	45006	49236
CAM Data[2]		19628	23858	28088	32318	36548	40778	45008	49238
CAM Data[3]		19630	23860	28090	32320	36550	40780	45010	49240
CAM Data[4]		19632	23862	28092	32322	36552	40782	45012	49242
CAM Data[5]		19634	23864	28094	32324	36554	40784	45014	49244
CAM Data[6]		19636	23866	28096	32326	36556	40786	45016	49246
CAM Data[7]		19638	23868	28098	32328	36558	40788	45018	49248
CAM Data[8]		19640	23870	28100	32330	36560	40790	45020	49250
CAM Data[9]		19642	23872	28102	32332	36562	40792	45022	49252
CAM Data[10]		19644	23874	28104	32334	36564	40794	45024	49254
CAM Data[11]		19646	23876	28106	32336	36566	40796	45026	49256
CAM Data[12]		19648	23878	28108	32338	36568	40798	45028	49258
CAM Data[13]		19650	23880	28110	32340	36570	40800	45030	49260
CAM Data[14]		19652	23882	28112	32342	36572	40802	45032	49262
CAM Data[15]		19654	23884	28114	32344	36574	40804	45034	49264
CAM Data[16]		19656	23886	28116	32346	36576	40806	45036	49266

	Block 1	Block 2	Block 3	Block 4	Block 5	Block 6	Block 7	Block 8
CAM Data[17]	19658	23888	28118	32348	36578	40808	45038	49268
CAM Data[18]	19660	23890	28120	32350	36580	40810	45040	49270
CAM Data[19]	19662	23892	28122	32352	36582	40812	45042	49272
CAM Data[20]	19664	23894	28124	32354	36584	40814	45044	49274
CAM Data[21]	19666	23896	28126	32356	36586	40816	45046	49276
CAM Data[22]	19668	23898	28128	32358	36588	40818	45048	49278
CAM Data[23]	19670	23900	28130	32360	36590	40820	45050	49280
CAM Data[24]	19672	23902	28132	32362	36592	40822	45052	49282
CAM Data[25]	19674	23904	28134	32364	36594	40824	45054	49284
CAM Data[26]	19676	23906	28136	32366	36596	40826	45056	49286
CAM Data[27]	19678	23908	28138	32368	36598	40828	45058	49288
CAM Data[28]	19680	23910	28140	32370	36600	40830	45060	49290
CAM Data[29]	19682	23912	28142	32372	36602	40832	45062	49292
CAM Data[30]	19684	23914	28144	32374	36604	40834	45064	49294
CAM Data[31]	19686	23916	28146	32376	36606	40836	45066	49296
CAM Data[32]	19688	23918	28148	32378	36608	40838	45068	49298
CAM Data[33]	19690	23920	28150	32380	36610	40840	45070	49300
CAM Data[34]	19692	23922	28152	32382	36612	40842	45072	49302
CAM Data[35]	19694	23924	28154	32384	36614	40844	45074	49304
CAM Data[36]	19696	23926	28156	32386	36616	40846	45076	49306
CAM Data[37]	19698	23928	28158	32388	36618	40848	45078	49308
CAM Data[38]	19700	23930	28160	32390	36620	40850	45080	49310
CAM Data[39]	19702	23932	28162	32392	36622	40852	45082	49312
CAM Data[40]	19704	23934	28164	32394	36624	40854	45084	49314
CAM Data[41]	19706	23936	28166	32396	36626	40856	45086	49316
CAM Data[42]	19708	23938	28168	32398	36628	40858	45088	49318
CAM Data[43]	19710	23940	28170	32400	36630	40860	45090	49320
CAM Data[44]	19712	23942	28172	32402	36632	40862	45092	49322
CAM Data[45]	19714	23944	28174	32404	36634	40864	45094	49324
CAM Data[46]	19716	23946	28176	32406	36636	40866	45096	49326
CAM Data[47]	19718	23948	28178	32408	36638	40868	45098	49328
CAM Data[48]	19720	23950	28180	32410	36640	40870	45100	49330
CAM Data[49]	19722	23952	28182	32412	36642	40872	45102	49332
CAM Data[50]	19724	23954	28184	32414	36644	40874	45104	49334
CAM Data[51]	19726	23956	28186	32416	36646	40876	45106	49336
CAM Data[52]	19728	23958	28188	32418	36648	40878	45108	49338
CAM Data[53]	19730	23960	28190	32420	36650	40880	45110	49340
CAM Data[54]	19732	23962	28192	32422	36652	40882	45112	49342
CAM Data[55]	19734	23964	28194	32424	36654	40884	45114	49344
CAM Data[56]	19736	23966	28196	32426	36656	40886	45116	49346
CAM Data[57]	19738	23968	28198	32428	36658	40888	45118	49348
CAM Data[58]	19740	23970	28200	32430	36660	40890	45120	49350
CAM Data[59]	19742	23972	28202	32432	36662	40892	45122	49352
CAM Data[60]	19744	23974	28204	32434	36664	40894	45124	49354
CAM Data[61]	19746	23976	28206	32436	36666	40896	45126	49356
CAM Data[62]	19748	23978	28208	32438	36668	40898	45128	49358

	Block 1	Block 2	Block 3	Block 4	Block 5	Block 6	Block 7	Block 8
CAM Data[63]	19750	23980	28210	32440	36670	40900	45130	49360
CAM Data[64]	19752	23982	28212	32442	36672	40902	45132	49362
CAM Data[65]	19754	23984	28214	32444	36674	40904	45134	49364
CAM Data[66]	19756	23986	28216	32446	36676	40906	45136	49366
CAM Data[67]	19758	23988	28218	32448	36678	40908	45138	49368
CAM Data[68]	19760	23990	28220	32450	36680	40910	45140	49370
CAM Data[69]	19762	23992	28222	32452	36682	40912	45142	49372
CAM Data[70]	19764	23994	28224	32454	36684	40914	45144	49374
CAM Data[71]	19766	23996	28226	32456	36686	40916	45146	49376
CAM Data[72]	19768	23998	28228	32458	36688	40918	45148	49378
CAM Data[73]	19770	24000	28230	32460	36690	40920	45150	49380
CAM Data[74]	19772	24002	28232	32462	36692	40922	45152	49382
CAM Data[75]	19774	24004	28234	32464	36694	40924	45154	49384
CAM Data[76]	19776	24006	28236	32466	36696	40926	45156	49386
CAM Data[77]	19778	24008	28238	32468	36698	40928	45158	49388
CAM Data[78]	19780	24010	28240	32470	36700	40930	45160	49390
CAM Data[79]	19782	24012	28242	32472	36702	40932	45162	49392
CAM Data[80]	19784	24014	28244	32474	36704	40934	45164	49394
CAM Data[81]	19786	24016	28246	32476	36706	40936	45166	49396
CAM Data[82]	19788	24018	28248	32478	36708	40938	45168	49398
CAM Data[83]	19790	24020	28250	32480	36710	40940	45170	49400
CAM Data[84]	19792	24022	28252	32482	36712	40942	45172	49402
CAM Data[85]	19794	24024	28254	32484	36714	40944	45174	49404
CAM Data[86]	19796	24026	28256	32486	36716	40946	45176	49406
CAM Data[87]	19798	24028	28258	32488	36718	40948	45178	49408
CAM Data[88]	19800	24030	28260	32490	36720	40950	45180	49410
CAM Data[89]	19802	24032	28262	32492	36722	40952	45182	49412
CAM Data[90]	19804	24034	28264	32494	36724	40954	45184	49414
CAM Data[91]	19806	24036	28266	32496	36726	40956	45186	49416
CAM Data[92]	19808	24038	28268	32498	36728	40958	45188	49418
CAM Data[93]	19810	24040	28270	32500	36730	40960	45190	49420
CAM Data[94]	19812	24042	28272	32502	36732	40962	45192	49422
CAM Data[95]	19814	24044	28274	32504	36734	40964	45194	49424
CAM Data[96]	19816	24046	28276	32506	36736	40966	45196	49426
CAM Data[97]	19818	24048	28278	32508	36738	40968	45198	49428
CAM Data[98]	19820	24050	28280	32510	36740	40970	45200	49430
CAM Data[99]	19822	24052	28282	32512	36742	40972	45202	49432
CAM Data[100]	19824	24054	28284	32514	36744	40974	45204	49434
CAM Data[101]	19826	24056	28286	32516	36746	40976	45206	49436
CAM Data[102]	19828	24058	28288	32518	36748	40978	45208	49438
CAM Data[103]	19830	24060	28290	32520	36750	40980	45210	49440
CAM Data[104]	19832	24062	28292	32522	36752	40982	45212	49442
CAM Data[105]	19834	24064	28294	32524	36754	40984	45214	49444
CAM Data[106]	19836	24066	28296	32526	36756	40986	45216	49446
CAM Data[107]	19838	24068	28298	32528	36758	40988	45218	49448
CAM Data[108]	19840	24070	28300	32530	36760	40990	45220	49450

	Block 1	Block 2	Block 3	Block 4	Block 5	Block 6	Block 7	Block 8
CAM Data[109]	19842	24072	28302	32532	36762	40992	45222	49452
CAM Data[110]	19844	24074	28304	32534	36764	40994	45224	49454
CAM Data[111]	19846	24076	28306	32536	36766	40996	45226	49456
CAM Data[112]	19848	24078	28308	32538	36768	40998	45228	49458
CAM Data[113]	19850	24080	28310	32540	36770	41000	45230	49460
CAM Data[114]	19852	24082	28312	32542	36772	41002	45232	49462
CAM Data[115]	19854	24084	28314	32544	36774	41004	45234	49464
CAM Data[116]	19856	24086	28316	32546	36776	41006	45236	49466
CAM Data[117]	19858	24088	28318	32548	36778	41008	45238	49468
CAM Data[118]	19860	24090	28320	32550	36780	41010	45240	49470
CAM Data[119]	19862	24092	28322	32552	36782	41012	45242	49472
CAM Data[120]	19864	24094	28324	32554	36784	41014	45244	49474
CAM Data[121]	19866	24096	28326	32556	36786	41016	45246	49476
CAM Data[122]	19868	24098	28328	32558	36788	41018	45248	49478
CAM Data[123]	19870	24100	28330	32560	36790	41020	45250	49480
CAM Data[124]	19872	24102	28332	32562	36792	41022	45252	49482
CAM Data[125]	19874	24104	28334	32564	36794	41024	45254	49484
CAM Data[126]	19876	24106	28336	32566	36796	41026	45256	49486
CAM Data[127]	19878	24108	28338	32568	36798	41028	45258	49488
CAM Data[128]	19880	24110	28340	32570	36800	41030	45260	49490
CAM Data[129]	19882	24112	28342	32572	36802	41032	45262	49492
CAM Data[130]	19884	24114	28344	32574	36804	41034	45264	49494
CAM Data[131]	19886	24116	28346	32576	36806	41036	45266	49496
CAM Data[132]	19888	24118	28348	32578	36808	41038	45268	49498
CAM Data[133]	19890	24120	28350	32580	36810	41040	45270	49500
CAM Data[134]	19892	24122	28352	32582	36812	41042	45272	49502
CAM Data[135]	19894	24124	28354	32584	36814	41044	45274	49504
CAM Data[136]	19896	24126	28356	32586	36816	41046	45276	49506
CAM Data[137]	19898	24128	28358	32588	36818	41048	45278	49508
CAM Data[138]	19900	24130	28360	32590	36820	41050	45280	49510
CAM Data[139]	19902	24132	28362	32592	36822	41052	45282	49512
CAM Data[140]	19904	24134	28364	32594	36824	41054	45284	49514
CAM Data[141]	19906	24136	28366	32596	36826	41056	45286	49516
CAM Data[142]	19908	24138	28368	32598	36828	41058	45288	49518
CAM Data[143]	19910	24140	28370	32600	36830	41060	45290	49520
CAM Data[144]	19912	24142	28372	32602	36832	41062	45292	49522
CAM Data[145]	19914	24144	28374	32604	36834	41064	45294	49524
CAM Data[146]	19916	24146	28376	32606	36836	41066	45296	49526
CAM Data[147]	19918	24148	28378	32608	36838	41068	45298	49528
CAM Data[148]	19920	24150	28380	32610	36840	41070	45300	49530
CAM Data[149]	19922	24152	28382	32612	36842	41072	45302	49532
CAM Data[150]	19924	24154	28384	32614	36844	41074	45304	49534
CAM Data[151]	19926	24156	28386	32616	36846	41076	45306	49536
CAM Data[152]	19928	24158	28388	32618	36848	41078	45308	49538
CAM Data[153]	19930	24160	28390	32620	36850	41080	45310	49540
CAM Data[154]	19932	24162	28392	32622	36852	41082	45312	49542

	Block 1	Block 2	Block 3	Block 4	Block 5	Block 6	Block 7	Block 8
CAM Data[155]	19934	24164	28394	32624	36854	41084	45314	49544
CAM Data[156]	19936	24166	28396	32626	36856	41086	45316	49546
CAM Data[157]	19938	24168	28398	32628	36858	41088	45318	49548
CAM Data[158]	19940	24170	28400	32630	36860	41090	45320	49550
CAM Data[159]	19942	24172	28402	32632	36862	41092	45322	49552
CAM Data[160]	19944	24174	28404	32634	36864	41094	45324	49554
CAM Data[161]	19946	24176	28406	32636	36866	41096	45326	49556
CAM Data[162]	19948	24178	28408	32638	36868	41098	45328	49558
CAM Data[163]	19950	24180	28410	32640	36870	41100	45330	49560
CAM Data[164]	19952	24182	28412	32642	36872	41102	45332	49562
CAM Data[165]	19954	24184	28414	32644	36874	41104	45334	49564
CAM Data[166]	19956	24186	28416	32646	36876	41106	45336	49566
CAM Data[167]	19958	24188	28418	32648	36878	41108	45338	49568
CAM Data[168]	19960	24190	28420	32650	36880	41110	45340	49570
CAM Data[169]	19962	24192	28422	32652	36882	41112	45342	49572
CAM Data[170]	19964	24194	28424	32654	36884	41114	45344	49574
CAM Data[171]	19966	24196	28426	32656	36886	41116	45346	49576
CAM Data[172]	19968	24198	28428	32658	36888	41118	45348	49578
CAM Data[173]	19970	24200	28430	32660	36890	41120	45350	49580
CAM Data[174]	19972	24202	28432	32662	36892	41122	45352	49582
CAM Data[175]	19974	24204	28434	32664	36894	41124	45354	49584
CAM Data[176]	19976	24206	28436	32666	36896	41126	45356	49586
CAM Data[177]	19978	24208	28438	32668	36898	41128	45358	49588
CAM Data[178]	19980	24210	28440	32670	36900	41130	45360	49590
CAM Data[179]	19982	24212	28442	32672	36902	41132	45362	49592
CAM Data[180]	19984	24214	28444	32674	36904	41134	45364	49594
CAM Data[181]	19986	24216	28446	32676	36906	41136	45366	49596
CAM Data[182]	19988	24218	28448	32678	36908	41138	45368	49598
CAM Data[183]	19990	24220	28450	32680	36910	41140	45370	49600
CAM Data[184]	19992	24222	28452	32682	36912	41142	45372	49602
CAM Data[185]	19994	24224	28454	32684	36914	41144	45374	49604
CAM Data[186]	19996	24226	28456	32686	36916	41146	45376	49606
CAM Data[187]	19998	24228	28458	32688	36918	41148	45378	49608
CAM Data[188]	20000	24230	28460	32690	36920	41150	45380	49610
CAM Data[189]	20002	24232	28462	32692	36922	41152	45382	49612
CAM Data[190]	20004	24234	28464	32694	36924	41154	45384	49614
CAM Data[191]	20006	24236	28466	32696	36926	41156	45386	49616
CAM Data[192]	20008	24238	28468	32698	36928	41158	45388	49618
CAM Data[193]	20010	24240	28470	32700	36930	41160	45390	49620
CAM Data[194]	20012	24242	28472	32702	36932	41162	45392	49622
CAM Data[195]	20014	24244	28474	32704	36934	41164	45394	49624
CAM Data[196]	20016	24246	28476	32706	36936	41166	45396	49626
CAM Data[197]	20018	24248	28478	32708	36938	41168	45398	49628
CAM Data[198]	20020	24250	28480	32710	36940	41170	45400	49630
CAM Data[199]	20022	24252	28482	32712	36942	41172	45402	49632
CAM Data[200]	20024	24254	28484	32714	36944	41174	45404	49634

	Block 1	Block 2	Block 3	Block 4	Block 5	Block 6	Block 7	Block 8
CAM Data[201]	20026	24256	28486	32716	36946	41176	45406	49636
CAM Data[202]	20028	24258	28488	32718	36948	41178	45408	49638
CAM Data[203]	20030	24260	28490	32720	36950	41180	45410	49640
CAM Data[204]	20032	24262	28492	32722	36952	41182	45412	49642
CAM Data[205]	20034	24264	28494	32724	36954	41184	45414	49644
CAM Data[206]	20036	24266	28496	32726	36956	41186	45416	49646
CAM Data[207]	20038	24268	28498	32728	36958	41188	45418	49648
CAM Data[208]	20040	24270	28500	32730	36960	41190	45420	49650
CAM Data[209]	20042	24272	28502	32732	36962	41192	45422	49652
CAM Data[210]	20044	24274	28504	32734	36964	41194	45424	49654
CAM Data[211]	20046	24276	28506	32736	36966	41196	45426	49656
CAM Data[212]	20048	24278	28508	32738	36968	41198	45428	49658
CAM Data[213]	20050	24280	28510	32740	36970	41200	45430	49660
CAM Data[214]	20052	24282	28512	32742	36972	41202	45432	49662
CAM Data[215]	20054	24284	28514	32744	36974	41204	45434	49664
CAM Data[216]	20056	24286	28516	32746	36976	41206	45436	49666
CAM Data[217]	20058	24288	28518	32748	36978	41208	45438	49668
CAM Data[218]	20060	24290	28520	32750	36980	41210	45440	49670
CAM Data[219]	20062	24292	28522	32752	36982	41212	45442	49672
CAM Data[220]	20064	24294	28524	32754	36984	41214	45444	49674
CAM Data[221]	20066	24296	28526	32756	36986	41216	45446	49676
CAM Data[222]	20068	24298	28528	32758	36988	41218	45448	49678
CAM Data[223]	20070	24300	28530	32760	36990	41220	45450	49680
CAM Data[224]	20072	24302	28532	32762	36992	41222	45452	49682
CAM Data[225]	20074	24304	28534	32764	36994	41224	45454	49684
CAM Data[226]	20076	24306	28536	32766	36996	41226	45456	49686
CAM Data[227]	20078	24308	28538	32768	36998	41228	45458	49688
CAM Data[228]	20080	24310	28540	32770	37000	41230	45460	49690
CAM Data[229]	20082	24312	28542	32772	37002	41232	45462	49692
CAM Data[230]	20084	24314	28544	32774	37004	41234	45464	49694
CAM Data[231]	20086	24316	28546	32776	37006	41236	45466	49696
CAM Data[232]	20088	24318	28548	32778	37008	41238	45468	49698
CAM Data[233]	20090	24320	28550	32780	37010	41240	45470	49700
CAM Data[234]	20092	24322	28552	32782	37012	41242	45472	49702
CAM Data[235]	20094	24324	28554	32784	37014	41244	45474	49704
CAM Data[236]	20096	24326	28556	32786	37016	41246	45476	49706
CAM Data[237]	20098	24328	28558	32788	37018	41248	45478	49708
CAM Data[238]	20100	24330	28560	32790	37020	41250	45480	49710
CAM Data[239]	20102	24332	28562	32792	37022	41252	45482	49712
CAM Data[240]	20104	24334	28564	32794	37024	41254	45484	49714
CAM Data[241]	20106	24336	28566	32796	37026	41256	45486	49716
CAM Data[242]	20108	24338	28568	32798	37028	41258	45488	49718
CAM Data[243]	20110	24340	28570	32800	37030	41260	45490	49720
CAM Data[244]	20112	24342	28572	32802	37032	41262	45492	49722
CAM Data[245]	20114	24344	28574	32804	37034	41264	45494	49724
CAM Data[246]	20116	24346	28576	32806	37036	41266	45496	49726

	Block 1	Block 2	Block 3	Block 4	Block 5	Block 6	Block 7	Block 8
CAM Data[247]	20118	24348	28578	32808	37038	41268	45498	49728
CAM Data[248]	20120	24350	28580	32810	37040	41270	45500	49730
CAM Data[249]	20122	24352	28582	32812	37042	41272	45502	49732
CAM Data[250]	20124	24354	28584	32814	37044	41274	45504	49734
CAM Data[251]	20126	24356	28586	32816	37046	41276	45506	49736
CAM Data[252]	20128	24358	28588	32818	37048	41278	45508	49738
CAM Data[253]	20130	24360	28590	32820	37050	41280	45510	49740
CAM Data[254]	20132	24362	28592	32822	37052	41282	45512	49742
CAM Data[255]	20134	24364	28594	32824	37054	41284	45514	49744
CAM Data[256]	20136	24366	28596	32826	37056	41286	45516	49746
CAM Data[257]	20138	24368	28598	32828	37058	41288	45518	49748
CAM Data[258]	20140	24370	28600	32830	37060	41290	45520	49750
CAM Data[259]	20142	24372	28602	32832	37062	41292	45522	49752
CAM Data[260]	20144	24374	28604	32834	37064	41294	45524	49754
CAM Data[261]	20146	24376	28606	32836	37066	41296	45526	49756
CAM Data[262]	20148	24378	28608	32838	37068	41298	45528	49758
CAM Data[263]	20150	24380	28610	32840	37070	41300	45530	49760
CAM Data[264]	20152	24382	28612	32842	37072	41302	45532	49762
CAM Data[265]	20154	24384	28614	32844	37074	41304	45534	49764
CAM Data[266]	20156	24386	28616	32846	37076	41306	45536	49766
CAM Data[267]	20158	24388	28618	32848	37078	41308	45538	49768
CAM Data[268]	20160	24390	28620	32850	37080	41310	45540	49770
CAM Data[269]	20162	24392	28622	32852	37082	41312	45542	49772
CAM Data[270]	20164	24394	28624	32854	37084	41314	45544	49774
CAM Data[271]	20166	24396	28626	32856	37086	41316	45546	49776
CAM Data[272]	20168	24398	28628	32858	37088	41318	45548	49778
CAM Data[273]	20170	24400	28630	32860	37090	41320	45550	49780
CAM Data[274]	20172	24402	28632	32862	37092	41322	45552	49782
CAM Data[275]	20174	24404	28634	32864	37094	41324	45554	49784
CAM Data[276]	20176	24406	28636	32866	37096	41326	45556	49786
CAM Data[277]	20178	24408	28638	32868	37098	41328	45558	49788
CAM Data[278]	20180	24410	28640	32870	37100	41330	45560	49790
CAM Data[279]	20182	24412	28642	32872	37102	41332	45562	49792
CAM Data[280]	20184	24414	28644	32874	37104	41334	45564	49794
CAM Data[281]	20186	24416	28646	32876	37106	41336	45566	49796
CAM Data[282]	20188	24418	28648	32878	37108	41338	45568	49798
CAM Data[283]	20190	24420	28650	32880	37110	41340	45570	49800
CAM Data[284]	20192	24422	28652	32882	37112	41342	45572	49802
CAM Data[285]	20194	24424	28654	32884	37114	41344	45574	49804
CAM Data[286]	20196	24426	28656	32886	37116	41346	45576	49806
CAM Data[287]	20198	24428	28658	32888	37118	41348	45578	49808
CAM Data[288]	20200	24430	28660	32890	37120	41350	45580	49810
CAM Data[289]	20202	24432	28662	32892	37122	41352	45582	49812
CAM Data[290]	20204	24434	28664	32894	37124	41354	45584	49814
CAM Data[291]	20206	24436	28666	32896	37126	41356	45586	49816
CAM Data[292]	20208	24438	28668	32898	37128	41358	45588	49818

	Block 1	Block 2	Block 3	Block 4	Block 5	Block 6	Block 7	Block 8
CAM Data[293]	20210	24440	28670	32900	37130	41360	45590	49820
CAM Data[294]	20212	24442	28672	32902	37132	41362	45592	49822
CAM Data[295]	20214	24444	28674	32904	37134	41364	45594	49824
CAM Data[296]	20216	24446	28676	32906	37136	41366	45596	49826
CAM Data[297]	20218	24448	28678	32908	37138	41368	45598	49828
CAM Data[298]	20220	24450	28680	32910	37140	41370	45600	49830
CAM Data[299]	20222	24452	28682	32912	37142	41372	45602	49832
CAM Data[300]	20224	24454	28684	32914	37144	41374	45604	49834
CAM Data[301]	20226	24456	28686	32916	37146	41376	45606	49836
CAM Data[302]	20228	24458	28688	32918	37148	41378	45608	49838
CAM Data[303]	20230	24460	28690	32920	37150	41380	45610	49840
CAM Data[304]	20232	24462	28692	32922	37152	41382	45612	49842
CAM Data[305]	20234	24464	28694	32924	37154	41384	45614	49844
CAM Data[306]	20236	24466	28696	32926	37156	41386	45616	49846
CAM Data[307]	20238	24468	28698	32928	37158	41388	45618	49848
CAM Data[308]	20240	24470	28700	32930	37160	41390	45620	49850
CAM Data[309]	20242	24472	28702	32932	37162	41392	45622	49852
CAM Data[310]	20244	24474	28704	32934	37164	41394	45624	49854
CAM Data[311]	20246	24476	28706	32936	37166	41396	45626	49856
CAM Data[312]	20248	24478	28708	32938	37168	41398	45628	49858
CAM Data[313]	20250	24480	28710	32940	37170	41400	45630	49860
CAM Data[314]	20252	24482	28712	32942	37172	41402	45632	49862
CAM Data[315]	20254	24484	28714	32944	37174	41404	45634	49864
CAM Data[316]	20256	24486	28716	32946	37176	41406	45636	49866
CAM Data[317]	20258	24488	28718	32948	37178	41408	45638	49868
CAM Data[318]	20260	24490	28720	32950	37180	41410	45640	49870
CAM Data[319]	20262	24492	28722	32952	37182	41412	45642	49872
CAM Data[320]	20264	24494	28724	32954	37184	41414	45644	49874
CAM Data[321]	20266	24496	28726	32956	37186	41416	45646	49876
CAM Data[322]	20268	24498	28728	32958	37188	41418	45648	49878
CAM Data[323]	20270	24500	28730	32960	37190	41420	45650	49880
CAM Data[324]	20272	24502	28732	32962	37192	41422	45652	49882
CAM Data[325]	20274	24504	28734	32964	37194	41424	45654	49884
CAM Data[326]	20276	24506	28736	32966	37196	41426	45656	49886
CAM Data[327]	20278	24508	28738	32968	37198	41428	45658	49888
CAM Data[328]	20280	24510	28740	32970	37200	41430	45660	49890
CAM Data[329]	20282	24512	28742	32972	37202	41432	45662	49892
CAM Data[330]	20284	24514	28744	32974	37204	41434	45664	49894
CAM Data[331]	20286	24516	28746	32976	37206	41436	45666	49896
CAM Data[332]	20288	24518	28748	32978	37208	41438	45668	49898
CAM Data[333]	20290	24520	28750	32980	37210	41440	45670	49900
CAM Data[334]	20292	24522	28752	32982	37212	41442	45672	49902
CAM Data[335]	20294	24524	28754	32984	37214	41444	45674	49904
CAM Data[336]	20296	24526	28756	32986	37216	41446	45676	49906
CAM Data[337]	20298	24528	28758	32988	37218	41448	45678	49908
CAM Data[338]	20300	24530	28760	32990	37220	41450	45680	49910

	Block 1	Block 2	Block 3	Block 4	Block 5	Block 6	Block 7	Block 8
CAM Data[339]	20302	24532	28762	32992	37222	41452	45682	49912
CAM Data[340]	20304	24534	28764	32994	37224	41454	45684	49914
CAM Data[341]	20306	24536	28766	32996	37226	41456	45686	49916
CAM Data[342]	20308	24538	28768	32998	37228	41458	45688	49918
CAM Data[343]	20310	24540	28770	33000	37230	41460	45690	49920
CAM Data[344]	20312	24542	28772	33002	37232	41462	45692	49922
CAM Data[345]	20314	24544	28774	33004	37234	41464	45694	49924
CAM Data[346]	20316	24546	28776	33006	37236	41466	45696	49926
CAM Data[347]	20318	24548	28778	33008	37238	41468	45698	49928
CAM Data[348]	20320	24550	28780	33010	37240	41470	45700	49930
CAM Data[349]	20322	24552	28782	33012	37242	41472	45702	49932
CAM Data[350]	20324	24554	28784	33014	37244	41474	45704	49934
CAM Data[351]	20326	24556	28786	33016	37246	41476	45706	49936
CAM Data[352]	20328	24558	28788	33018	37248	41478	45708	49938
CAM Data[353]	20330	24560	28790	33020	37250	41480	45710	49940
CAM Data[354]	20332	24562	28792	33022	37252	41482	45712	49942
CAM Data[355]	20334	24564	28794	33024	37254	41484	45714	49944
CAM Data[356]	20336	24566	28796	33026	37256	41486	45716	49946
CAM Data[357]	20338	24568	28798	33028	37258	41488	45718	49948
CAM Data[358]	20340	24570	28800	33030	37260	41490	45720	49950
CAM Data[359]	20342	24572	28802	33032	37262	41492	45722	49952
CAM Data[360]	20344	24574	28804	33034	37264	41494	45724	49954
CAM Data[361]	20346	24576	28806	33036	37266	41496	45726	49956
CAM Data[362]	20348	24578	28808	33038	37268	41498	45728	49958
CAM Data[363]	20350	24580	28810	33040	37270	41500	45730	49960
CAM Data[364]	20352	24582	28812	33042	37272	41502	45732	49962
CAM Data[365]	20354	24584	28814	33044	37274	41504	45734	49964
CAM Data[366]	20356	24586	28816	33046	37276	41506	45736	49966
CAM Data[367]	20358	24588	28818	33048	37278	41508	45738	49968
CAM Data[368]	20360	24590	28820	33050	37280	41510	45740	49970
CAM Data[369]	20362	24592	28822	33052	37282	41512	45742	49972
CAM Data[370]	20364	24594	28824	33054	37284	41514	45744	49974
CAM Data[371]	20366	24596	28826	33056	37286	41516	45746	49976
CAM Data[372]	20368	24598	28828	33058	37288	41518	45748	49978
CAM Data[373]	20370	24600	28830	33060	37290	41520	45750	49980
CAM Data[374]	20372	24602	28832	33062	37292	41522	45752	49982
CAM Data[375]	20374	24604	28834	33064	37294	41524	45754	49984
CAM Data[376]	20376	24606	28836	33066	37296	41526	45756	49986
CAM Data[377]	20378	24608	28838	33068	37298	41528	45758	49988
CAM Data[378]	20380	24610	28840	33070	37300	41530	45760	49990
CAM Data[379]	20382	24612	28842	33072	37302	41532	45762	49992
CAM Data[380]	20384	24614	28844	33074	37304	41534	45764	49994
CAM Data[381]	20386	24616	28846	33076	37306	41536	45766	49996
CAM Data[382]	20388	24618	28848	33078	37308	41538	45768	49998
CAM Data[383]	20390	24620	28850	33080	37310	41540	45770	50000
CAM Data[384]	20392	24622	28852	33082	37312	41542	45772	50002

	Block 1	Block 2	Block 3	Block 4	Block 5	Block 6	Block 7	Block 8
CAM Data[385]	20394	24624	28854	33084	37314	41544	45774	50004
CAM Data[386]	20396	24626	28856	33086	37316	41546	45776	50006
CAM Data[387]	20398	24628	28858	33088	37318	41548	45778	50008
CAM Data[388]	20400	24630	28860	33090	37320	41550	45780	50010
CAM Data[389]	20402	24632	28862	33092	37322	41552	45782	50012
CAM Data[390]	20404	24634	28864	33094	37324	41554	45784	50014
CAM Data[391]	20406	24636	28866	33096	37326	41556	45786	50016
CAM Data[392]	20408	24638	28868	33098	37328	41558	45788	50018
CAM Data[393]	20410	24640	28870	33100	37330	41560	45790	50020
CAM Data[394]	20412	24642	28872	33102	37332	41562	45792	50022
CAM Data[395]	20414	24644	28874	33104	37334	41564	45794	50024
CAM Data[396]	20416	24646	28876	33106	37336	41566	45796	50026
CAM Data[397]	20418	24648	28878	33108	37338	41568	45798	50028
CAM Data[398]	20420	24650	28880	33110	37340	41570	45800	50030
CAM Data[399]	20422	24652	28882	33112	37342	41572	45802	50032
CAM Data[400]	20424	24654	28884	33114	37344	41574	45804	50034
CAM Data[401]	20426	24656	28886	33116	37346	41576	45806	50036
CAM Data[402]	20428	24658	28888	33118	37348	41578	45808	50038
CAM Data[403]	20430	24660	28890	33120	37350	41580	45810	50040
CAM Data[404]	20432	24662	28892	33122	37352	41582	45812	50042
CAM Data[405]	20434	24664	28894	33124	37354	41584	45814	50044
CAM Data[406]	20436	24666	28896	33126	37356	41586	45816	50046
CAM Data[407]	20438	24668	28898	33128	37358	41588	45818	50048
CAM Data[408]	20440	24670	28900	33130	37360	41590	45820	50050
CAM Data[409]	20442	24672	28902	33132	37362	41592	45822	50052
CAM Data[410]	20444	24674	28904	33134	37364	41594	45824	50054
CAM Data[411]	20446	24676	28906	33136	37366	41596	45826	50056
CAM Data[412]	20448	24678	28908	33138	37368	41598	45828	50058
CAM Data[413]	20450	24680	28910	33140	37370	41600	45830	50060
CAM Data[414]	20452	24682	28912	33142	37372	41602	45832	50062
CAM Data[415]	20454	24684	28914	33144	37374	41604	45834	50064
CAM Data[416]	20456	24686	28916	33146	37376	41606	45836	50066
CAM Data[417]	20458	24688	28918	33148	37378	41608	45838	50068
CAM Data[418]	20460	24690	28920	33150	37380	41610	45840	50070
CAM Data[419]	20462	24692	28922	33152	37382	41612	45842	50072
CAM Data[420]	20464	24694	28924	33154	37384	41614	45844	50074
CAM Data[421]	20466	24696	28926	33156	37386	41616	45846	50076
CAM Data[422]	20468	24698	28928	33158	37388	41618	45848	50078
CAM Data[423]	20470	24700	28930	33160	37390	41620	45850	50080
CAM Data[424]	20472	24702	28932	33162	37392	41622	45852	50082
CAM Data[425]	20474	24704	28934	33164	37394	41624	45854	50084
CAM Data[426]	20476	24706	28936	33166	37396	41626	45856	50086
CAM Data[427]	20478	24708	28938	33168	37398	41628	45858	50088
CAM Data[428]	20480	24710	28940	33170	37400	41630	45860	50090
CAM Data[429]	20482	24712	28942	33172	37402	41632	45862	50092
CAM Data[430]	20484	24714	28944	33174	37404	41634	45864	50094

	Block 1	Block 2	Block 3	Block 4	Block 5	Block 6	Block 7	Block 8
CAM Data[431]	20486	24716	28946	33176	37406	41636	45866	50096
CAM Data[432]	20488	24718	28948	33178	37408	41638	45868	50098
CAM Data[433]	20490	24720	28950	33180	37410	41640	45870	50100
CAM Data[434]	20492	24722	28952	33182	37412	41642	45872	50102
CAM Data[435]	20494	24724	28954	33184	37414	41644	45874	50104
CAM Data[436]	20496	24726	28956	33186	37416	41646	45876	50106
CAM Data[437]	20498	24728	28958	33188	37418	41648	45878	50108
CAM Data[438]	20500	24730	28960	33190	37420	41650	45880	50110
CAM Data[439]	20502	24732	28962	33192	37422	41652	45882	50112
CAM Data[440]	20504	24734	28964	33194	37424	41654	45884	50114
CAM Data[441]	20506	24736	28966	33196	37426	41656	45886	50116
CAM Data[442]	20508	24738	28968	33198	37428	41658	45888	50118
CAM Data[443]	20510	24740	28970	33200	37430	41660	45890	50120
CAM Data[444]	20512	24742	28972	33202	37432	41662	45892	50122
CAM Data[445]	20514	24744	28974	33204	37434	41664	45894	50124
CAM Data[446]	20516	24746	28976	33206	37436	41666	45896	50126
CAM Data[447]	20518	24748	28978	33208	37438	41668	45898	50128
CAM Data[448]	20520	24750	28980	33210	37440	41670	45900	50130
CAM Data[449]	20522	24752	28982	33212	37442	41672	45902	50132
CAM Data[450]	20524	24754	28984	33214	37444	41674	45904	50134
CAM Data[451]	20526	24756	28986	33216	37446	41676	45906	50136
CAM Data[452]	20528	24758	28988	33218	37448	41678	45908	50138
CAM Data[453]	20530	24760	28990	33220	37450	41680	45910	50140
CAM Data[454]	20532	24762	28992	33222	37452	41682	45912	50142
CAM Data[455]	20534	24764	28994	33224	37454	41684	45914	50144
CAM Data[456]	20536	24766	28996	33226	37456	41686	45916	50146
CAM Data[457]	20538	24768	28998	33228	37458	41688	45918	50148
CAM Data[458]	20540	24770	29000	33230	37460	41690	45920	50150
CAM Data[459]	20542	24772	29002	33232	37462	41692	45922	50152
CAM Data[460]	20544	24774	29004	33234	37464	41694	45924	50154
CAM Data[461]	20546	24776	29006	33236	37466	41696	45926	50156
CAM Data[462]	20548	24778	29008	33238	37468	41698	45928	50158
CAM Data[463]	20550	24780	29010	33240	37470	41700	45930	50160
CAM Data[464]	20552	24782	29012	33242	37472	41702	45932	50162
CAM Data[465]	20554	24784	29014	33244	37474	41704	45934	50164
CAM Data[466]	20556	24786	29016	33246	37476	41706	45936	50166
CAM Data[467]	20558	24788	29018	33248	37478	41708	45938	50168
CAM Data[468]	20560	24790	29020	33250	37480	41710	45940	50170
CAM Data[469]	20562	24792	29022	33252	37482	41712	45942	50172
CAM Data[470]	20564	24794	29024	33254	37484	41714	45944	50174
CAM Data[471]	20566	24796	29026	33256	37486	41716	45946	50176
CAM Data[472]	20568	24798	29028	33258	37488	41718	45948	50178
CAM Data[473]	20570	24800	29030	33260	37490	41720	45950	50180
CAM Data[474]	20572	24802	29032	33262	37492	41722	45952	50182
CAM Data[475]	20574	24804	29034	33264	37494	41724	45954	50184
CAM Data[476]	20576	24806	29036	33266	37496	41726	45956	50186

	Block 1	Block 2	Block 3	Block 4	Block 5	Block 6	Block 7	Block 8
CAM Data[477]	20578	24808	29038	33268	37498	41728	45958	50188
CAM Data[478]	20580	24810	29040	33270	37500	41730	45960	50190
CAM Data[479]	20582	24812	29042	33272	37502	41732	45962	50192
CAM Data[480]	20584	24814	29044	33274	37504	41734	45964	50194
CAM Data[481]	20586	24816	29046	33276	37506	41736	45966	50196
CAM Data[482]	20588	24818	29048	33278	37508	41738	45968	50198
CAM Data[483]	20590	24820	29050	33280	37510	41740	45970	50200
CAM Data[484]	20592	24822	29052	33282	37512	41742	45972	50202
CAM Data[485]	20594	24824	29054	33284	37514	41744	45974	50204
CAM Data[486]	20596	24826	29056	33286	37516	41746	45976	50206
CAM Data[487]	20598	24828	29058	33288	37518	41748	45978	50208
CAM Data[488]	20600	24830	29060	33290	37520	41750	45980	50210
CAM Data[489]	20602	24832	29062	33292	37522	41752	45982	50212
CAM Data[490]	20604	24834	29064	33294	37524	41754	45984	50214
CAM Data[491]	20606	24836	29066	33296	37526	41756	45986	50216
CAM Data[492]	20608	24838	29068	33298	37528	41758	45988	50218
CAM Data[493]	20610	24840	29070	33300	37530	41760	45990	50220
CAM Data[494]	20612	24842	29072	33302	37532	41762	45992	50222
CAM Data[495]	20614	24844	29074	33304	37534	41764	45994	50224
CAM Data[496]	20616	24846	29076	33306	37536	41766	45996	50226
CAM Data[497]	20618	24848	29078	33308	37538	41768	45998	50228
CAM Data[498]	20620	24850	29080	33310	37540	41770	46000	50230
CAM Data[499]	20622	24852	29082	33312	37542	41772	46002	50232
CAM Data[500]	20624	24854	29084	33314	37544	41774	46004	50234
CAM Data[501]	20626	24856	29086	33316	37546	41776	46006	50236
CAM Data[502]	20628	24858	29088	33318	37548	41778	46008	50238
CAM Data[503]	20630	24860	29090	33320	37550	41780	46010	50240
CAM Data[504]	20632	24862	29092	33322	37552	41782	46012	50242
CAM Data[505]	20634	24864	29094	33324	37554	41784	46014	50244
CAM Data[506]	20636	24866	29096	33326	37556	41786	46016	50246
CAM Data[507]	20638	24868	29098	33328	37558	41788	46018	50248
CAM Data[508]	20640	24870	29100	33330	37560	41790	46020	50250
CAM Data[509]	20642	24872	29102	33332	37562	41792	46022	50252
CAM Data[510]	20644	24874	29104	33334	37564	41794	46024	50254
CAM Data[511]	20646	24876	29106	33336	37566	41796	46026	50256
CAM Data[512]	20648	24878	29108	33338	37568	41798	46028	50258
CAM Data[513]	20650	24880	29110	33340	37570	41800	46030	50260
CAM Data[514]	20652	24882	29112	33342	37572	41802	46032	50262
CAM Data[515]	20654	24884	29114	33344	37574	41804	46034	50264
CAM Data[516]	20656	24886	29116	33346	37576	41806	46036	50266
CAM Data[517]	20658	24888	29118	33348	37578	41808	46038	50268
CAM Data[518]	20660	24890	29120	33350	37580	41810	46040	50270
CAM Data[519]	20662	24892	29122	33352	37582	41812	46042	50272
CAM Data[520]	20664	24894	29124	33354	37584	41814	46044	50274
CAM Data[521]	20666	24896	29126	33356	37586	41816	46046	50276
CAM Data[522]	20668	24898	29128	33358	37588	41818	46048	50278

	Block 1	Block 2	Block 3	Block 4	Block 5	Block 6	Block 7	Block 8
CAM Data[523]	20670	24900	29130	33360	37590	41820	46050	50280
CAM Data[524]	20672	24902	29132	33362	37592	41822	46052	50282
CAM Data[525]	20674	24904	29134	33364	37594	41824	46054	50284
CAM Data[526]	20676	24906	29136	33366	37596	41826	46056	50286
CAM Data[527]	20678	24908	29138	33368	37598	41828	46058	50288
CAM Data[528]	20680	24910	29140	33370	37600	41830	46060	50290
CAM Data[529]	20682	24912	29142	33372	37602	41832	46062	50292
CAM Data[530]	20684	24914	29144	33374	37604	41834	46064	50294
CAM Data[531]	20686	24916	29146	33376	37606	41836	46066	50296
CAM Data[532]	20688	24918	29148	33378	37608	41838	46068	50298
CAM Data[533]	20690	24920	29150	33380	37610	41840	46070	50300
CAM Data[534]	20692	24922	29152	33382	37612	41842	46072	50302
CAM Data[535]	20694	24924	29154	33384	37614	41844	46074	50304
CAM Data[536]	20696	24926	29156	33386	37616	41846	46076	50306
CAM Data[537]	20698	24928	29158	33388	37618	41848	46078	50308
CAM Data[538]	20700	24930	29160	33390	37620	41850	46080	50310
CAM Data[539]	20702	24932	29162	33392	37622	41852	46082	50312
CAM Data[540]	20704	24934	29164	33394	37624	41854	46084	50314
CAM Data[541]	20706	24936	29166	33396	37626	41856	46086	50316
CAM Data[542]	20708	24938	29168	33398	37628	41858	46088	50318
CAM Data[543]	20710	24940	29170	33400	37630	41860	46090	50320
CAM Data[544]	20712	24942	29172	33402	37632	41862	46092	50322
CAM Data[545]	20714	24944	29174	33404	37634	41864	46094	50324
CAM Data[546]	20716	24946	29176	33406	37636	41866	46096	50326
CAM Data[547]	20718	24948	29178	33408	37638	41868	46098	50328
CAM Data[548]	20720	24950	29180	33410	37640	41870	46100	50330
CAM Data[549]	20722	24952	29182	33412	37642	41872	46102	50332
CAM Data[550]	20724	24954	29184	33414	37644	41874	46104	50334
CAM Data[551]	20726	24956	29186	33416	37646	41876	46106	50336
CAM Data[552]	20728	24958	29188	33418	37648	41878	46108	50338
CAM Data[553]	20730	24960	29190	33420	37650	41880	46110	50340
CAM Data[554]	20732	24962	29192	33422	37652	41882	46112	50342
CAM Data[555]	20734	24964	29194	33424	37654	41884	46114	50344
CAM Data[556]	20736	24966	29196	33426	37656	41886	46116	50346
CAM Data[557]	20738	24968	29198	33428	37658	41888	46118	50348
CAM Data[558]	20740	24970	29200	33430	37660	41890	46120	50350
CAM Data[559]	20742	24972	29202	33432	37662	41892	46122	50352
CAM Data[560]	20744	24974	29204	33434	37664	41894	46124	50354
CAM Data[561]	20746	24976	29206	33436	37666	41896	46126	50356
CAM Data[562]	20748	24978	29208	33438	37668	41898	46128	50358
CAM Data[563]	20750	24980	29210	33440	37670	41900	46130	50360
CAM Data[564]	20752	24982	29212	33442	37672	41902	46132	50362
CAM Data[565]	20754	24984	29214	33444	37674	41904	46134	50364
CAM Data[566]	20756	24986	29216	33446	37676	41906	46136	50366
CAM Data[567]	20758	24988	29218	33448	37678	41908	46138	50368
CAM Data[568]	20760	24990	29220	33450	37680	41910	46140	50370

	Block 1	Block 2	Block 3	Block 4	Block 5	Block 6	Block 7	Block 8
CAM Data[569]	20762	24992	29222	33452	37682	41912	46142	50372
CAM Data[570]	20764	24994	29224	33454	37684	41914	46144	50374
CAM Data[571]	20766	24996	29226	33456	37686	41916	46146	50376
CAM Data[572]	20768	24998	29228	33458	37688	41918	46148	50378
CAM Data[573]	20770	25000	29230	33460	37690	41920	46150	50380
CAM Data[574]	20772	25002	29232	33462	37692	41922	46152	50382
CAM Data[575]	20774	25004	29234	33464	37694	41924	46154	50384
CAM Data[576]	20776	25006	29236	33466	37696	41926	46156	50386
CAM Data[577]	20778	25008	29238	33468	37698	41928	46158	50388
CAM Data[578]	20780	25010	29240	33470	37700	41930	46160	50390
CAM Data[579]	20782	25012	29242	33472	37702	41932	46162	50392
CAM Data[580]	20784	25014	29244	33474	37704	41934	46164	50394
CAM Data[581]	20786	25016	29246	33476	37706	41936	46166	50396
CAM Data[582]	20788	25018	29248	33478	37708	41938	46168	50398
CAM Data[583]	20790	25020	29250	33480	37710	41940	46170	50400
CAM Data[584]	20792	25022	29252	33482	37712	41942	46172	50402
CAM Data[585]	20794	25024	29254	33484	37714	41944	46174	50404
CAM Data[586]	20796	25026	29256	33486	37716	41946	46176	50406
CAM Data[587]	20798	25028	29258	33488	37718	41948	46178	50408
CAM Data[588]	20800	25030	29260	33490	37720	41950	46180	50410
CAM Data[589]	20802	25032	29262	33492	37722	41952	46182	50412
CAM Data[590]	20804	25034	29264	33494	37724	41954	46184	50414
CAM Data[591]	20806	25036	29266	33496	37726	41956	46186	50416
CAM Data[592]	20808	25038	29268	33498	37728	41958	46188	50418
CAM Data[593]	20810	25040	29270	33500	37730	41960	46190	50420
CAM Data[594]	20812	25042	29272	33502	37732	41962	46192	50422
CAM Data[595]	20814	25044	29274	33504	37734	41964	46194	50424
CAM Data[596]	20816	25046	29276	33506	37736	41966	46196	50426
CAM Data[597]	20818	25048	29278	33508	37738	41968	46198	50428
CAM Data[598]	20820	25050	29280	33510	37740	41970	46200	50430
CAM Data[599]	20822	25052	29282	33512	37742	41972	46202	50432
CAM Data[600]	20824	25054	29284	33514	37744	41974	46204	50434
CAM Data[601]	20826	25056	29286	33516	37746	41976	46206	50436
CAM Data[602]	20828	25058	29288	33518	37748	41978	46208	50438
CAM Data[603]	20830	25060	29290	33520	37750	41980	46210	50440
CAM Data[604]	20832	25062	29292	33522	37752	41982	46212	50442
CAM Data[605]	20834	25064	29294	33524	37754	41984	46214	50444
CAM Data[606]	20836	25066	29296	33526	37756	41986	46216	50446
CAM Data[607]	20838	25068	29298	33528	37758	41988	46218	50448
CAM Data[608]	20840	25070	29300	33530	37760	41990	46220	50450
CAM Data[609]	20842	25072	29302	33532	37762	41992	46222	50452
CAM Data[610]	20844	25074	29304	33534	37764	41994	46224	50454
CAM Data[611]	20846	25076	29306	33536	37766	41996	46226	50456
CAM Data[612]	20848	25078	29308	33538	37768	41998	46228	50458
CAM Data[613]	20850	25080	29310	33540	37770	42000	46230	50460
CAM Data[614]	20852	25082	29312	33542	37772	42002	46232	50462

	Block 1	Block 2	Block 3	Block 4	Block 5	Block 6	Block 7	Block 8
CAM Data[615]	20854	25084	29314	33544	37774	42004	46234	50464
CAM Data[616]	20856	25086	29316	33546	37776	42006	46236	50466
CAM Data[617]	20858	25088	29318	33548	37778	42008	46238	50468
CAM Data[618]	20860	25090	29320	33550	37780	42010	46240	50470
CAM Data[619]	20862	25092	29322	33552	37782	42012	46242	50472
CAM Data[620]	20864	25094	29324	33554	37784	42014	46244	50474
CAM Data[621]	20866	25096	29326	33556	37786	42016	46246	50476
CAM Data[622]	20868	25098	29328	33558	37788	42018	46248	50478
CAM Data[623]	20870	25100	29330	33560	37790	42020	46250	50480
CAM Data[624]	20872	25102	29332	33562	37792	42022	46252	50482
CAM Data[625]	20874	25104	29334	33564	37794	42024	46254	50484
CAM Data[626]	20876	25106	29336	33566	37796	42026	46256	50486
CAM Data[627]	20878	25108	29338	33568	37798	42028	46258	50488
CAM Data[628]	20880	25110	29340	33570	37800	42030	46260	50490
CAM Data[629]	20882	25112	29342	33572	37802	42032	46262	50492
CAM Data[630]	20884	25114	29344	33574	37804	42034	46264	50494
CAM Data[631]	20886	25116	29346	33576	37806	42036	46266	50496
CAM Data[632]	20888	25118	29348	33578	37808	42038	46268	50498
CAM Data[633]	20890	25120	29350	33580	37810	42040	46270	50500
CAM Data[634]	20892	25122	29352	33582	37812	42042	46272	50502
CAM Data[635]	20894	25124	29354	33584	37814	42044	46274	50504
CAM Data[636]	20896	25126	29356	33586	37816	42046	46276	50506
CAM Data[637]	20898	25128	29358	33588	37818	42048	46278	50508
CAM Data[638]	20900	25130	29360	33590	37820	42050	46280	50510
CAM Data[639]	20902	25132	29362	33592	37822	42052	46282	50512
CAM Data[640]	20904	25134	29364	33594	37824	42054	46284	50514
CAM Data[641]	20906	25136	29366	33596	37826	42056	46286	50516
CAM Data[642]	20908	25138	29368	33598	37828	42058	46288	50518
CAM Data[643]	20910	25140	29370	33600	37830	42060	46290	50520
CAM Data[644]	20912	25142	29372	33602	37832	42062	46292	50522
CAM Data[645]	20914	25144	29374	33604	37834	42064	46294	50524
CAM Data[646]	20916	25146	29376	33606	37836	42066	46296	50526
CAM Data[647]	20918	25148	29378	33608	37838	42068	46298	50528
CAM Data[648]	20920	25150	29380	33610	37840	42070	46300	50530
CAM Data[649]	20922	25152	29382	33612	37842	42072	46302	50532
CAM Data[650]	20924	25154	29384	33614	37844	42074	46304	50534
CAM Data[651]	20926	25156	29386	33616	37846	42076	46306	50536
CAM Data[652]	20928	25158	29388	33618	37848	42078	46308	50538
CAM Data[653]	20930	25160	29390	33620	37850	42080	46310	50540
CAM Data[654]	20932	25162	29392	33622	37852	42082	46312	50542
CAM Data[655]	20934	25164	29394	33624	37854	42084	46314	50544
CAM Data[656]	20936	25166	29396	33626	37856	42086	46316	50546
CAM Data[657]	20938	25168	29398	33628	37858	42088	46318	50548
CAM Data[658]	20940	25170	29400	33630	37860	42090	46320	50550
CAM Data[659]	20942	25172	29402	33632	37862	42092	46322	50552
CAM Data[660]	20944	25174	29404	33634	37864	42094	46324	50554

	Block 1	Block 2	Block 3	Block 4	Block 5	Block 6	Block 7	Block 8
CAM Data[661]	20946	25176	29406	33636	37866	42096	46326	50556
CAM Data[662]	20948	25178	29408	33638	37868	42098	46328	50558
CAM Data[663]	20950	25180	29410	33640	37870	42100	46330	50560
CAM Data[664]	20952	25182	29412	33642	37872	42102	46332	50562
CAM Data[665]	20954	25184	29414	33644	37874	42104	46334	50564
CAM Data[666]	20956	25186	29416	33646	37876	42106	46336	50566
CAM Data[667]	20958	25188	29418	33648	37878	42108	46338	50568
CAM Data[668]	20960	25190	29420	33650	37880	42110	46340	50570
CAM Data[669]	20962	25192	29422	33652	37882	42112	46342	50572
CAM Data[670]	20964	25194	29424	33654	37884	42114	46344	50574
CAM Data[671]	20966	25196	29426	33656	37886	42116	46346	50576
CAM Data[672]	20968	25198	29428	33658	37888	42118	46348	50578
CAM Data[673]	20970	25200	29430	33660	37890	42120	46350	50580
CAM Data[674]	20972	25202	29432	33662	37892	42122	46352	50582
CAM Data[675]	20974	25204	29434	33664	37894	42124	46354	50584
CAM Data[676]	20976	25206	29436	33666	37896	42126	46356	50586
CAM Data[677]	20978	25208	29438	33668	37898	42128	46358	50588
CAM Data[678]	20980	25210	29440	33670	37900	42130	46360	50590
CAM Data[679]	20982	25212	29442	33672	37902	42132	46362	50592
CAM Data[680]	20984	25214	29444	33674	37904	42134	46364	50594
CAM Data[681]	20986	25216	29446	33676	37906	42136	46366	50596
CAM Data[682]	20988	25218	29448	33678	37908	42138	46368	50598
CAM Data[683]	20990	25220	29450	33680	37910	42140	46370	50600
CAM Data[684]	20992	25222	29452	33682	37912	42142	46372	50602
CAM Data[685]	20994	25224	29454	33684	37914	42144	46374	50604
CAM Data[686]	20996	25226	29456	33686	37916	42146	46376	50606
CAM Data[687]	20998	25228	29458	33688	37918	42148	46378	50608
CAM Data[688]	21000	25230	29460	33690	37920	42150	46380	50610
CAM Data[689]	21002	25232	29462	33692	37922	42152	46382	50612
CAM Data[690]	21004	25234	29464	33694	37924	42154	46384	50614
CAM Data[691]	21006	25236	29466	33696	37926	42156	46386	50616
CAM Data[692]	21008	25238	29468	33698	37928	42158	46388	50618
CAM Data[693]	21010	25240	29470	33700	37930	42160	46390	50620
CAM Data[694]	21012	25242	29472	33702	37932	42162	46392	50622
CAM Data[695]	21014	25244	29474	33704	37934	42164	46394	50624
CAM Data[696]	21016	25246	29476	33706	37936	42166	46396	50626
CAM Data[697]	21018	25248	29478	33708	37938	42168	46398	50628
CAM Data[698]	21020	25250	29480	33710	37940	42170	46400	50630
CAM Data[699]	21022	25252	29482	33712	37942	42172	46402	50632
CAM Data[700]	21024	25254	29484	33714	37944	42174	46404	50634
CAM Data[701]	21026	25256	29486	33716	37946	42176	46406	50636
CAM Data[702]	21028	25258	29488	33718	37948	42178	46408	50638
CAM Data[703]	21030	25260	29490	33720	37950	42180	46410	50640
CAM Data[704]	21032	25262	29492	33722	37952	42182	46412	50642
CAM Data[705]	21034	25264	29494	33724	37954	42184	46414	50644
CAM Data[706]	21036	25266	29496	33726	37956	42186	46416	50646
CAM Data[707]	21038	25268	29498	33728	37958	42188	46418	50648

	Block 1	Block 2	Block 3	Block 4	Block 5	Block 6	Block 7	Block 8
CAM Data[708]	21040	25270	29500	33730	37960	42190	46420	50650
CAM Data[709]	21042	25272	29502	33732	37962	42192	46422	50652
CAM Data[710]	21044	25274	29504	33734	37964	42194	46424	50654
CAM Data[711]	21046	25276	29506	33736	37966	42196	46426	50656
CAM Data[712]	21048	25278	29508	33738	37968	42198	46428	50658
CAM Data[713]	21050	25280	29510	33740	37970	42200	46430	50660
CAM Data[714]	21052	25282	29512	33742	37972	42202	46432	50662
CAM Data[715]	21054	25284	29514	33744	37974	42204	46434	50664
CAM Data[716]	21056	25286	29516	33746	37976	42206	46436	50666
CAM Data[717]	21058	25288	29518	33748	37978	42208	46438	50668
CAM Data[718]	21060	25290	29520	33750	37980	42210	46440	50670
CAM Data[719]	21062	25292	29522	33752	37982	42212	46442	50672
CAM Data[720]	21064	25294	29524	33754	37984	42214	46444	50674
CAM Data[721]	21066	25296	29526	33756	37986	42216	46446	50676
CAM Data[722]	21068	25298	29528	33758	37988	42218	46448	50678
CAM Data[723]	21070	25300	29530	33760	37990	42220	46450	50680
CAM Data[724]	21072	25302	29532	33762	37992	42222	46452	50682
CAM Data[725]	21074	25304	29534	33764	37994	42224	46454	50684
CAM Data[726]	21076	25306	29536	33766	37996	42226	46456	50686
CAM Data[727]	21078	25308	29538	33768	37998	42228	46458	50688
CAM Data[728]	21080	25310	29540	33770	38000	42230	46460	50690
CAM Data[729]	21082	25312	29542	33772	38002	42232	46462	50692
CAM Data[730]	21084	25314	29544	33774	38004	42234	46464	50694
CAM Data[731]	21086	25316	29546	33776	38006	42236	46466	50696
CAM Data[732]	21088	25318	29548	33778	38008	42238	46468	50698
CAM Data[733]	21090	25320	29550	33780	38010	42240	46470	50700
CAM Data[734]	21092	25322	29552	33782	38012	42242	46472	50702
CAM Data[735]	21094	25324	29554	33784	38014	42244	46474	50704
CAM Data[736]	21096	25326	29556	33786	38016	42246	46476	50706
CAM Data[737]	21098	25328	29558	33788	38018	42248	46478	50708
CAM Data[738]	21100	25330	29560	33790	38020	42250	46480	50710
CAM Data[739]	21102	25332	29562	33792	38022	42252	46482	50712
CAM Data[740]	21104	25334	29564	33794	38024	42254	46484	50714
CAM Data[741]	21106	25336	29566	33796	38026	42256	46486	50716
CAM Data[742]	21108	25338	29568	33798	38028	42258	46488	50718
CAM Data[743]	21110	25340	29570	33800	38030	42260	46490	50720
CAM Data[744]	21112	25342	29572	33802	38032	42262	46492	50722
CAM Data[745]	21114	25344	29574	33804	38034	42264	46494	50724
CAM Data[746]	21116	25346	29576	33806	38036	42266	46496	50726
CAM Data[747]	21118	25348	29578	33808	38038	42268	46498	50728
CAM Data[748]	21120	25350	29580	33810	38040	42270	46500	50730
CAM Data[749]	21122	25352	29582	33812	38042	42272	46502	50732
CAM Data[750]	21124	25354	29584	33814	38044	42274	46504	50734
CAM Data[751]	21126	25356	29586	33816	38046	42276	46506	50736
CAM Data[752]	21128	25358	29588	33818	38048	42278	46508	50738
CAM Data[753]	21130	25360	29590	33820	38050	42280	46510	50740
CAM Data[754]	21132	25362	29592	33822	38052	42282	46512	50742

	Block 1	Block 2	Block 3	Block 4	Block 5	Block 6	Block 7	Block 8
CAM Data[755]	21134	25364	29594	33824	38054	42284	46514	50744
CAM Data[756]	21136	25366	29596	33826	38056	42286	46516	50746
CAM Data[757]	21138	25368	29598	33828	38058	42288	46518	50748
CAM Data[758]	21140	25370	29600	33830	38060	42290	46520	50750
CAM Data[759]	21142	25372	29602	33832	38062	42292	46522	50752
CAM Data[760]	21144	25374	29604	33834	38064	42294	46524	50754
CAM Data[761]	21146	25376	29606	33836	38066	42296	46526	50756
CAM Data[762]	21148	25378	29608	33838	38068	42298	46528	50758
CAM Data[763]	21150	25380	29610	33840	38070	42300	46530	50760
CAM Data[764]	21152	25382	29612	33842	38072	42302	46532	50762
CAM Data[765]	21154	25384	29614	33844	38074	42304	46534	50764
CAM Data[766]	21156	25386	29616	33846	38076	42306	46536	50766
CAM Data[767]	21158	25388	29618	33848	38078	42308	46538	50768
CAM Data[768]	21160	25390	29620	33850	38080	42310	46540	50770
CAM Data[769]	21162	25392	29622	33852	38082	42312	46542	50772
CAM Data[770]	21164	25394	29624	33854	38084	42314	46544	50774
CAM Data[771]	21166	25396	29626	33856	38086	42316	46546	50776
CAM Data[772]	21168	25398	29628	33858	38088	42318	46548	50778
CAM Data[773]	21170	25400	29630	33860	38090	42320	46550	50780
CAM Data[774]	21172	25402	29632	33862	38092	42322	46552	50782
CAM Data[775]	21174	25404	29634	33864	38094	42324	46554	50784
CAM Data[776]	21176	25406	29636	33866	38096	42326	46556	50786
CAM Data[777]	21178	25408	29638	33868	38098	42328	46558	50788
CAM Data[778]	21180	25410	29640	33870	38100	42330	46560	50790
CAM Data[779]	21182	25412	29642	33872	38102	42332	46562	50792
CAM Data[780]	21184	25414	29644	33874	38104	42334	46564	50794
CAM Data[781]	21186	25416	29646	33876	38106	42336	46566	50796
CAM Data[782]	21188	25418	29648	33878	38108	42338	46568	50798
CAM Data[783]	21190	25420	29650	33880	38110	42340	46570	50800
CAM Data[784]	21192	25422	29652	33882	38112	42342	46572	50802
CAM Data[785]	21194	25424	29654	33884	38114	42344	46574	50804
CAM Data[786]	21196	25426	29656	33886	38116	42346	46576	50806
CAM Data[787]	21198	25428	29658	33888	38118	42348	46578	50808
CAM Data[788]	21200	25430	29660	33890	38120	42350	46580	50810
CAM Data[789]	21202	25432	29662	33892	38122	42352	46582	50812
CAM Data[790]	21204	25434	29664	33894	38124	42354	46584	50814
CAM Data[791]	21206	25436	29666	33896	38126	42356	46586	50816
CAM Data[792]	21208	25438	29668	33898	38128	42358	46588	50818
CAM Data[793]	21210	25440	29670	33900	38130	42360	46590	50820
CAM Data[794]	21212	25442	29672	33902	38132	42362	46592	50822
CAM Data[795]	21214	25444	29674	33904	38134	42364	46594	50824
CAM Data[796]	21216	25446	29676	33906	38136	42366	46596	50826
CAM Data[797]	21218	25448	29678	33908	38138	42368	46598	50828
CAM Data[798]	21220	25450	29680	33910	38140	42370	46600	50830
CAM Data[799]	21222	25452	29682	33912	38142	42372	46602	50832
CAM Data[800]	21224	25454	29684	33914	38144	42374	46604	50834
CAM Data[801]	21226	25456	29686	33916	38146	42376	46606	50836

	Block 1	Block 2	Block 3	Block 4	Block 5	Block 6	Block 7	Block 8
CAM Data[802]	21228	25458	29688	33918	38148	42378	46608	50838
CAM Data[803]	21230	25460	29690	33920	38150	42380	46610	50840
CAM Data[804]	21232	25462	29692	33922	38152	42382	46612	50842
CAM Data[805]	21234	25464	29694	33924	38154	42384	46614	50844
CAM Data[806]	21236	25466	29696	33926	38156	42386	46616	50846
CAM Data[807]	21238	25468	29698	33928	38158	42388	46618	50848
CAM Data[808]	21240	25470	29700	33930	38160	42390	46620	50850
CAM Data[809]	21242	25472	29702	33932	38162	42392	46622	50852
CAM Data[810]	21244	25474	29704	33934	38164	42394	46624	50854
CAM Data[811]	21246	25476	29706	33936	38166	42396	46626	50856
CAM Data[812]	21248	25478	29708	33938	38168	42398	46628	50858
CAM Data[813]	21250	25480	29710	33940	38170	42400	46630	50860
CAM Data[814]	21252	25482	29712	33942	38172	42402	46632	50862
CAM Data[815]	21254	25484	29714	33944	38174	42404	46634	50864
CAM Data[816]	21256	25486	29716	33946	38176	42406	46636	50866
CAM Data[817]	21258	25488	29718	33948	38178	42408	46638	50868
CAM Data[818]	21260	25490	29720	33950	38180	42410	46640	50870
CAM Data[819]	21262	25492	29722	33952	38182	42412	46642	50872
CAM Data[820]	21264	25494	29724	33954	38184	42414	46644	50874
CAM Data[821]	21266	25496	29726	33956	38186	42416	46646	50876
CAM Data[822]	21268	25498	29728	33958	38188	42418	46648	50878
CAM Data[823]	21270	25500	29730	33960	38190	42420	46650	50880
CAM Data[824]	21272	25502	29732	33962	38192	42422	46652	50882
CAM Data[825]	21274	25504	29734	33964	38194	42424	46654	50884
CAM Data[826]	21276	25506	29736	33966	38196	42426	46656	50886
CAM Data[827]	21278	25508	29738	33968	38198	42428	46658	50888
CAM Data[828]	21280	25510	29740	33970	38200	42430	46660	50890
CAM Data[829]	21282	25512	29742	33972	38202	42432	46662	50892
CAM Data[830]	21284	25514	29744	33974	38204	42434	46664	50894
CAM Data[831]	21286	25516	29746	33976	38206	42436	46666	50896
CAM Data[832]	21288	25518	29748	33978	38208	42438	46668	50898
CAM Data[833]	21290	25520	29750	33980	38210	42440	46670	50900
CAM Data[834]	21292	25522	29752	33982	38212	42442	46672	50902
CAM Data[835]	21294	25524	29754	33984	38214	42444	46674	50904
CAM Data[836]	21296	25526	29756	33986	38216	42446	46676	50906
CAM Data[837]	21298	25528	29758	33988	38218	42448	46678	50908
CAM Data[838]	21300	25530	29760	33990	38220	42450	46680	50910
CAM Data[839]	21302	25532	29762	33992	38222	42452	46682	50912
CAM Data[840]	21304	25534	29764	33994	38224	42454	46684	50914
CAM Data[841]	21306	25536	29766	33996	38226	42456	46686	50916
CAM Data[842]	21308	25538	29768	33998	38228	42458	46688	50918
CAM Data[843]	21310	25540	29770	34000	38230	42460	46690	50920
CAM Data[844]	21312	25542	29772	34002	38232	42462	46692	50922
CAM Data[845]	21314	25544	29774	34004	38234	42464	46694	50924
CAM Data[846]	21316	25546	29776	34006	38236	42466	46696	50926
CAM Data[847]	21318	25548	29778	34008	38238	42468	46698	50928
CAM Data[848]	21320	25550	29780	34010	38240	42470	46700	50930

	Block 1	Block 2	Block 3	Block 4	Block 5	Block 6	Block 7	Block 8
CAM Data[849]	21322	25552	29782	34012	38242	42472	46702	50932
CAM Data[850]	21324	25554	29784	34014	38244	42474	46704	50934
CAM Data[851]	21326	25556	29786	34016	38246	42476	46706	50936
CAM Data[852]	21328	25558	29788	34018	38248	42478	46708	50938
CAM Data[853]	21330	25560	29790	34020	38250	42480	46710	50940
CAM Data[854]	21332	25562	29792	34022	38252	42482	46712	50942
CAM Data[855]	21334	25564	29794	34024	38254	42484	46714	50944
CAM Data[856]	21336	25566	29796	34026	38256	42486	46716	50946
CAM Data[857]	21338	25568	29798	34028	38258	42488	46718	50948
CAM Data[858]	21340	25570	29800	34030	38260	42490	46720	50950
CAM Data[859]	21342	25572	29802	34032	38262	42492	46722	50952
CAM Data[860]	21344	25574	29804	34034	38264	42494	46724	50954
CAM Data[861]	21346	25576	29806	34036	38266	42496	46726	50956
CAM Data[862]	21348	25578	29808	34038	38268	42498	46728	50958
CAM Data[863]	21350	25580	29810	34040	38270	42500	46730	50960
CAM Data[864]	21352	25582	29812	34042	38272	42502	46732	50962
CAM Data[865]	21354	25584	29814	34044	38274	42504	46734	50964
CAM Data[866]	21356	25586	29816	34046	38276	42506	46736	50966
CAM Data[867]	21358	25588	29818	34048	38278	42508	46738	50968
CAM Data[868]	21360	25590	29820	34050	38280	42510	46740	50970
CAM Data[869]	21362	25592	29822	34052	38282	42512	46742	50972
CAM Data[870]	21364	25594	29824	34054	38284	42514	46744	50974
CAM Data[871]	21366	25596	29826	34056	38286	42516	46746	50976
CAM Data[872]	21368	25598	29828	34058	38288	42518	46748	50978
CAM Data[873]	21370	25600	29830	34060	38290	42520	46750	50980
CAM Data[874]	21372	25602	29832	34062	38292	42522	46752	50982
CAM Data[875]	21374	25604	29834	34064	38294	42524	46754	50984
CAM Data[876]	21376	25606	29836	34066	38296	42526	46756	50986
CAM Data[877]	21378	25608	29838	34068	38298	42528	46758	50988
CAM Data[878]	21380	25610	29840	34070	38300	42530	46760	50990
CAM Data[879]	21382	25612	29842	34072	38302	42532	46762	50992
CAM Data[880]	21384	25614	29844	34074	38304	42534	46764	50994
CAM Data[881]	21386	25616	29846	34076	38306	42536	46766	50996
CAM Data[882]	21388	25618	29848	34078	38308	42538	46768	50998
CAM Data[883]	21390	25620	29850	34080	38310	42540	46770	51000
CAM Data[884]	21392	25622	29852	34082	38312	42542	46772	51002
CAM Data[885]	21394	25624	29854	34084	38314	42544	46774	51004
CAM Data[886]	21396	25626	29856	34086	38316	42546	46776	51006
CAM Data[887]	21398	25628	29858	34088	38318	42548	46778	51008
CAM Data[888]	21400	25630	29860	34090	38320	42550	46780	51010
CAM Data[889]	21402	25632	29862	34092	38322	42552	46782	51012
CAM Data[890]	21404	25634	29864	34094	38324	42554	46784	51014
CAM Data[891]	21406	25636	29866	34096	38326	42556	46786	51016
CAM Data[892]	21408	25638	29868	34098	38328	42558	46788	51018
CAM Data[893]	21410	25640	29870	34100	38330	42560	46790	51020
CAM Data[894]	21412	25642	29872	34102	38332	42562	46792	51022
CAM Data[895]	21414	25644	29874	34104	38334	42564	46794	51024

	Block 1	Block 2	Block 3	Block 4	Block 5	Block 6	Block 7	Block 8
CAM Data[896]	21416	25646	29876	34106	38336	42566	46796	51026
CAM Data[897]	21418	25648	29878	34108	38338	42568	46798	51028
CAM Data[898]	21420	25650	29880	34110	38340	42570	46800	51030
CAM Data[899]	21422	25652	29882	34112	38342	42572	46802	51032
CAM Data[900]	21424	25654	29884	34114	38344	42574	46804	51034
CAM Data[901]	21426	25656	29886	34116	38346	42576	46806	51036
CAM Data[902]	21428	25658	29888	34118	38348	42578	46808	51038
CAM Data[903]	21430	25660	29890	34120	38350	42580	46810	51040
CAM Data[904]	21432	25662	29892	34122	38352	42582	46812	51042
CAM Data[905]	21434	25664	29894	34124	38354	42584	46814	51044
CAM Data[906]	21436	25666	29896	34126	38356	42586	46816	51046
CAM Data[907]	21438	25668	29898	34128	38358	42588	46818	51048
CAM Data[908]	21440	25670	29900	34130	38360	42590	46820	51050
CAM Data[909]	21442	25672	29902	34132	38362	42592	46822	51052
CAM Data[910]	21444	25674	29904	34134	38364	42594	46824	51054
CAM Data[911]	21446	25676	29906	34136	38366	42596	46826	51056
CAM Data[912]	21448	25678	29908	34138	38368	42598	46828	51058
CAM Data[913]	21450	25680	29910	34140	38370	42600	46830	51060
CAM Data[914]	21452	25682	29912	34142	38372	42602	46832	51062
CAM Data[915]	21454	25684	29914	34144	38374	42604	46834	51064
CAM Data[916]	21456	25686	29916	34146	38376	42606	46836	51066
CAM Data[917]	21458	25688	29918	34148	38378	42608	46838	51068
CAM Data[918]	21460	25690	29920	34150	38380	42610	46840	51070
CAM Data[919]	21462	25692	29922	34152	38382	42612	46842	51072
CAM Data[920]	21464	25694	29924	34154	38384	42614	46844	51074
CAM Data[921]	21466	25696	29926	34156	38386	42616	46846	51076
CAM Data[922]	21468	25698	29928	34158	38388	42618	46848	51078
CAM Data[923]	21470	25700	29930	34160	38390	42620	46850	51080
CAM Data[924]	21472	25702	29932	34162	38392	42622	46852	51082
CAM Data[925]	21474	25704	29934	34164	38394	42624	46854	51084
CAM Data[926]	21476	25706	29936	34166	38396	42626	46856	51086
CAM Data[927]	21478	25708	29938	34168	38398	42628	46858	51088
CAM Data[928]	21480	25710	29940	34170	38400	42630	46860	51090
CAM Data[929]	21482	25712	29942	34172	38402	42632	46862	51092
CAM Data[930]	21484	25714	29944	34174	38404	42634	46864	51094
CAM Data[931]	21486	25716	29946	34176	38406	42636	46866	51096
CAM Data[932]	21488	25718	29948	34178	38408	42638	46868	51098
CAM Data[933]	21490	25720	29950	34180	38410	42640	46870	51100
CAM Data[934]	21492	25722	29952	34182	38412	42642	46872	51102
CAM Data[935]	21494	25724	29954	34184	38414	42644	46874	51104
CAM Data[936]	21496	25726	29956	34186	38416	42646	46876	51106
CAM Data[937]	21498	25728	29958	34188	38418	42648	46878	51108
CAM Data[938]	21500	25730	29960	34190	38420	42650	46880	51110
CAM Data[939]	21502	25732	29962	34192	38422	42652	46882	51112
CAM Data[940]	21504	25734	29964	34194	38424	42654	46884	51114
CAM Data[941]	21506	25736	29966	34196	38426	42656	46886	51116
CAM Data[942]	21508	25738	29968	34198	38428	42658	46888	51118

	Block 1	Block 2	Block 3	Block 4	Block 5	Block 6	Block 7	Block 8
CAM Data[943]	21510	25740	29970	34200	38430	42660	46890	51120
CAM Data[944]	21512	25742	29972	34202	38432	42662	46892	51122
CAM Data[945]	21514	25744	29974	34204	38434	42664	46894	51124
CAM Data[946]	21516	25746	29976	34206	38436	42666	46896	51126
CAM Data[947]	21518	25748	29978	34208	38438	42668	46898	51128
CAM Data[948]	21520	25750	29980	34210	38440	42670	46900	51130
CAM Data[949]	21522	25752	29982	34212	38442	42672	46902	51132
CAM Data[950]	21524	25754	29984	34214	38444	42674	46904	51134
CAM Data[951]	21526	25756	29986	34216	38446	42676	46906	51136
CAM Data[952]	21528	25758	29988	34218	38448	42678	46908	51138
CAM Data[953]	21530	25760	29990	34220	38450	42680	46910	51140
CAM Data[954]	21532	25762	29992	34222	38452	42682	46912	51142
CAM Data[955]	21534	25764	29994	34224	38454	42684	46914	51144
CAM Data[956]	21536	25766	29996	34226	38456	42686	46916	51146
CAM Data[957]	21538	25768	29998	34228	38458	42688	46918	51148
CAM Data[958]	21540	25770	30000	34230	38460	42690	46920	51150
CAM Data[959]	21542	25772	30002	34232	38462	42692	46922	51152
CAM Data[960]	21544	25774	30004	34234	38464	42694	46924	51154
CAM Data[961]	21546	25776	30006	34236	38466	42696	46926	51156
CAM Data[962]	21548	25778	30008	34238	38468	42698	46928	51158
CAM Data[963]	21550	25780	30010	34240	38470	42700	46930	51160
CAM Data[964]	21552	25782	30012	34242	38472	42702	46932	51162
CAM Data[965]	21554	25784	30014	34244	38474	42704	46934	51164
CAM Data[966]	21556	25786	30016	34246	38476	42706	46936	51166
CAM Data[967]	21558	25788	30018	34248	38478	42708	46938	51168
CAM Data[968]	21560	25790	30020	34250	38480	42710	46940	51170
CAM Data[969]	21562	25792	30022	34252	38482	42712	46942	51172
CAM Data[970]	21564	25794	30024	34254	38484	42714	46944	51174
CAM Data[971]	21566	25796	30026	34256	38486	42716	46946	51176
CAM Data[972]	21568	25798	30028	34258	38488	42718	46948	51178
CAM Data[973]	21570	25800	30030	34260	38490	42720	46950	51180
CAM Data[974]	21572	25802	30032	34262	38492	42722	46952	51182
CAM Data[975]	21574	25804	30034	34264	38494	42724	46954	51184
CAM Data[976]	21576	25806	30036	34266	38496	42726	46956	51186
CAM Data[977]	21578	25808	30038	34268	38498	42728	46958	51188
CAM Data[978]	21580	25810	30040	34270	38500	42730	46960	51190
CAM Data[979]	21582	25812	30042	34272	38502	42732	46962	51192
CAM Data[980]	21584	25814	30044	34274	38504	42734	46964	51194
CAM Data[981]	21586	25816	30046	34276	38506	42736	46966	51196
CAM Data[982]	21588	25818	30048	34278	38508	42738	46968	51198
CAM Data[983]	21590	25820	30050	34280	38510	42740	46970	51200
CAM Data[984]	21592	25822	30052	34282	38512	42742	46972	51202
CAM Data[985]	21594	25824	30054	34284	38514	42744	46974	51204
CAM Data[986]	21596	25826	30056	34286	38516	42746	46976	51206
CAM Data[987]	21598	25828	30058	34288	38518	42748	46978	51208
CAM Data[988]	21600	25830	30060	34290	38520	42750	46980	51210
CAM Data[989]	21602	25832	30062	34292	38522	42752	46982	51212

	Block 1	Block 2	Block 3	Block 4	Block 5	Block 6	Block 7	Block 8
CAM Data[990]	21604	25834	30064	34294	38524	42754	46984	51214
CAM Data[991]	21606	25836	30066	34296	38526	42756	46986	51216
CAM Data[992]	21608	25838	30068	34298	38528	42758	46988	51218
CAM Data[993]	21610	25840	30070	34300	38530	42760	46990	51220
CAM Data[994]	21612	25842	30072	34302	38532	42762	46992	51222
CAM Data[995]	21614	25844	30074	34304	38534	42764	46994	51224
CAM Data[996]	21616	25846	30076	34306	38536	42766	46996	51226
CAM Data[997]	21618	25848	30078	34308	38538	42768	46998	51228
CAM Data[998]	21620	25850	30080	34310	38540	42770	47000	51230
CAM Data[999]	21622	25852	30082	34312	38542	42772	47002	51232
CAM Data[1000]	21624	25854	30084	34314	38544	42774	47004	51234
CAM Data[1001]	21626	25856	30086	34316	38546	42776	47006	51236
CAM Data[1002]	21628	25858	30088	34318	38548	42778	47008	51238
CAM Data[1003]	21630	25860	30090	34320	38550	42780	47010	51240
CAM Data[1004]	21632	25862	30092	34322	38552	42782	47012	51242
CAM Data[1005]	21634	25864	30094	34324	38554	42784	47014	51244
CAM Data[1006]	21636	25866	30096	34326	38556	42786	47016	51246
CAM Data[1007]	21638	25868	30098	34328	38558	42788	47018	51248
CAM Data[1008]	21640	25870	30100	34330	38560	42790	47020	51250
CAM Data[1009]	21642	25872	30102	34332	38562	42792	47022	51252
CAM Data[1010]	21644	25874	30104	34334	38564	42794	47024	51254
CAM Data[1011]	21646	25876	30106	34336	38566	42796	47026	51256
CAM Data[1012]	21648	25878	30108	34338	38568	42798	47028	51258
CAM Data[1013]	21650	25880	30110	34340	38570	42800	47030	51260
CAM Data[1014]	21652	25882	30112	34342	38572	42802	47032	51262
CAM Data[1015]	21654	25884	30114	34344	38574	42804	47034	51264
CAM Data[1016]	21656	25886	30116	34346	38576	42806	47036	51266
CAM Data[1017]	21658	25888	30118	34348	38578	42808	47038	51268
CAM Data[1018]	21660	25890	30120	34350	38580	42810	47040	51270
CAM Data[1019]	21662	25892	30122	34352	38582	42812	47042	51272
CAM Data[1020]	21664	25894	30124	34354	38584	42814	47044	51274
CAM Data[1021]	21666	25896	30126	34356	38586	42816	47046	51276
CAM Data[1022]	21668	25898	30128	34358	38588	42818	47048	51278
CAM Data[1023]	21670	25900	30130	34360	38590	42820	47050	51280
CAM Data[1024]	21672	25902	30132	34362	38592	42822	47052	51282
CAM Data[1025]	21674	25904	30134	34364	38594	42824	47054	51284
CAM Data[1026]	21676	25906	30136	34366	38596	42826	47056	51286
CAM Data[1027]	21678	25908	30138	34368	38598	42828	47058	51288
CAM Data[1028]	21680	25910	30140	34370	38600	42830	47060	51290
CAM Data[1029]	21682	25912	30142	34372	38602	42832	47062	51292
CAM Data[1030]	21684	25914	30144	34374	38604	42834	47064	51294
CAM Data[1031]	21686	25916	30146	34376	38606	42836	47066	51296
CAM Data[1032]	21688	25918	30148	34378	38608	42838	47068	51298
CAM Data[1033]	21690	25920	30150	34380	38610	42840	47070	51300
CAM Data[1034]	21692	25922	30152	34382	38612	42842	47072	51302
CAM Data[1035]	21694	25924	30154	34384	38614	42844	47074	51304
CAM Data[1036]	21696	25926	30156	34386	38616	42846	47076	51306

	Block 1	Block 2	Block 3	Block 4	Block 5	Block 6	Block 7	Block 8
CAM Data[1037]	21698	25928	30158	34388	38618	42848	47078	51308
CAM Data[1038]	21700	25930	30160	34390	38620	42850	47080	51310
CAM Data[1039]	21702	25932	30162	34392	38622	42852	47082	51312
CAM Data[1040]	21704	25934	30164	34394	38624	42854	47084	51314
CAM Data[1041]	21706	25936	30166	34396	38626	42856	47086	51316
CAM Data[1042]	21708	25938	30168	34398	38628	42858	47088	51318
CAM Data[1043]	21710	25940	30170	34400	38630	42860	47090	51320
CAM Data[1044]	21712	25942	30172	34402	38632	42862	47092	51322
CAM Data[1045]	21714	25944	30174	34404	38634	42864	47094	51324
CAM Data[1046]	21716	25946	30176	34406	38636	42866	47096	51326
CAM Data[1047]	21718	25948	30178	34408	38638	42868	47098	51328
CAM Data[1048]	21720	25950	30180	34410	38640	42870	47100	51330
CAM Data[1049]	21722	25952	30182	34412	38642	42872	47102	51332
CAM Data[1050]	21724	25954	30184	34414	38644	42874	47104	51334
CAM Data[1051]	21726	25956	30186	34416	38646	42876	47106	51336
CAM Data[1052]	21728	25958	30188	34418	38648	42878	47108	51338
CAM Data[1053]	21730	25960	30190	34420	38650	42880	47110	51340
CAM Data[1054]	21732	25962	30192	34422	38652	42882	47112	51342
CAM Data[1055]	21734	25964	30194	34424	38654	42884	47114	51344
CAM Data[1056]	21736	25966	30196	34426	38656	42886	47116	51346
CAM Data[1057]	21738	25968	30198	34428	38658	42888	47118	51348
CAM Data[1058]	21740	25970	30200	34430	38660	42890	47120	51350
CAM Data[1059]	21742	25972	30202	34432	38662	42892	47122	51352
CAM Data[1060]	21744	25974	30204	34434	38664	42894	47124	51354
CAM Data[1061]	21746	25976	30206	34436	38666	42896	47126	51356
CAM Data[1062]	21748	25978	30208	34438	38668	42898	47128	51358
CAM Data[1063]	21750	25980	30210	34440	38670	42900	47130	51360
CAM Data[1064]	21752	25982	30212	34442	38672	42902	47132	51362
CAM Data[1065]	21754	25984	30214	34444	38674	42904	47134	51364
CAM Data[1066]	21756	25986	30216	34446	38676	42906	47136	51366
CAM Data[1067]	21758	25988	30218	34448	38678	42908	47138	51368
CAM Data[1068]	21760	25990	30220	34450	38680	42910	47140	51370
CAM Data[1069]	21762	25992	30222	34452	38682	42912	47142	51372
CAM Data[1070]	21764	25994	30224	34454	38684	42914	47144	51374
CAM Data[1071]	21766	25996	30226	34456	38686	42916	47146	51376
CAM Data[1072]	21768	25998	30228	34458	38688	42918	47148	51378
CAM Data[1073]	21770	26000	30230	34460	38690	42920	47150	51380
CAM Data[1074]	21772	26002	30232	34462	38692	42922	47152	51382
CAM Data[1075]	21774	26004	30234	34464	38694	42924	47154	51384
CAM Data[1076]	21776	26006	30236	34466	38696	42926	47156	51386
CAM Data[1077]	21778	26008	30238	34468	38698	42928	47158	51388
CAM Data[1078]	21780	26010	30240	34470	38700	42930	47160	51390
CAM Data[1079]	21782	26012	30242	34472	38702	42932	47162	51392
CAM Data[1080]	21784	26014	30244	34474	38704	42934	47164	51394
CAM Data[1081]	21786	26016	30246	34476	38706	42936	47166	51396
CAM Data[1082]	21788	26018	30248	34478	38708	42938	47168	51398
CAM Data[1083]	21790	26020	30250	34480	38710	42940	47170	51400

	Block 1	Block 2	Block 3	Block 4	Block 5	Block 6	Block 7	Block 8
CAM Data[1084]	21792	26022	30252	34482	38712	42942	47172	51402
CAM Data[1085]	21794	26024	30254	34484	38714	42944	47174	51404
CAM Data[1086]	21796	26026	30256	34486	38716	42946	47176	51406
CAM Data[1087]	21798	26028	30258	34488	38718	42948	47178	51408
CAM Data[1088]	21800	26030	30260	34490	38720	42950	47180	51410
CAM Data[1089]	21802	26032	30262	34492	38722	42952	47182	51412
CAM Data[1090]	21804	26034	30264	34494	38724	42954	47184	51414
CAM Data[1091]	21806	26036	30266	34496	38726	42956	47186	51416
CAM Data[1092]	21808	26038	30268	34498	38728	42958	47188	51418
CAM Data[1093]	21810	26040	30270	34500	38730	42960	47190	51420
CAM Data[1094]	21812	26042	30272	34502	38732	42962	47192	51422
CAM Data[1095]	21814	26044	30274	34504	38734	42964	47194	51424
CAM Data[1096]	21816	26046	30276	34506	38736	42966	47196	51426
CAM Data[1097]	21818	26048	30278	34508	38738	42968	47198	51428
CAM Data[1098]	21820	26050	30280	34510	38740	42970	47200	51430
CAM Data[1099]	21822	26052	30282	34512	38742	42972	47202	51432
CAM Data[1100]	21824	26054	30284	34514	38744	42974	47204	51434
CAM Data[1101]	21826	26056	30286	34516	38746	42976	47206	51436
CAM Data[1102]	21828	26058	30288	34518	38748	42978	47208	51438
CAM Data[1103]	21830	26060	30290	34520	38750	42980	47210	51440
CAM Data[1104]	21832	26062	30292	34522	38752	42982	47212	51442
CAM Data[1105]	21834	26064	30294	34524	38754	42984	47214	51444
CAM Data[1106]	21836	26066	30296	34526	38756	42986	47216	51446
CAM Data[1107]	21838	26068	30298	34528	38758	42988	47218	51448
CAM Data[1108]	21840	26070	30300	34530	38760	42990	47220	51450
CAM Data[1109]	21842	26072	30302	34532	38762	42992	47222	51452
CAM Data[1110]	21844	26074	30304	34534	38764	42994	47224	51454
CAM Data[1111]	21846	26076	30306	34536	38766	42996	47226	51456
CAM Data[1112]	21848	26078	30308	34538	38768	42998	47228	51458
CAM Data[1113]	21850	26080	30310	34540	38770	43000	47230	51460
CAM Data[1114]	21852	26082	30312	34542	38772	43002	47232	51462
CAM Data[1115]	21854	26084	30314	34544	38774	43004	47234	51464
CAM Data[1116]	21856	26086	30316	34546	38776	43006	47236	51466
CAM Data[1117]	21858	26088	30318	34548	38778	43008	47238	51468
CAM Data[1118]	21860	26090	30320	34550	38780	43010	47240	51470
CAM Data[1119]	21862	26092	30322	34552	38782	43012	47242	51472
CAM Data[1120]	21864	26094	30324	34554	38784	43014	47244	51474
CAM Data[1121]	21866	26096	30326	34556	38786	43016	47246	51476
CAM Data[1122]	21868	26098	30328	34558	38788	43018	47248	51478
CAM Data[1123]	21870	26100	30330	34560	38790	43020	47250	51480
CAM Data[1124]	21872	26102	30332	34562	38792	43022	47252	51482
CAM Data[1125]	21874	26104	30334	34564	38794	43024	47254	51484
CAM Data[1126]	21876	26106	30336	34566	38796	43026	47256	51486
CAM Data[1127]	21878	26108	30338	34568	38798	43028	47258	51488
CAM Data[1128]	21880	26110	30340	34570	38800	43030	47260	51490
CAM Data[1129]	21882	26112	30342	34572	38802	43032	47262	51492
CAM Data[1130]	21884	26114	30344	34574	38804	43034	47264	51494

	Block 1	Block 2	Block 3	Block 4	Block 5	Block 6	Block 7	Block 8
CAM Data[1131]	21886	26116	30346	34576	38806	43036	47266	51496
CAM Data[1132]	21888	26118	30348	34578	38808	43038	47268	51498
CAM Data[1133]	21890	26120	30350	34580	38810	43040	47270	51500
CAM Data[1134]	21892	26122	30352	34582	38812	43042	47272	51502
CAM Data[1135]	21894	26124	30354	34584	38814	43044	47274	51504
CAM Data[1136]	21896	26126	30356	34586	38816	43046	47276	51506
CAM Data[1137]	21898	26128	30358	34588	38818	43048	47278	51508
CAM Data[1138]	21900	26130	30360	34590	38820	43050	47280	51510
CAM Data[1139]	21902	26132	30362	34592	38822	43052	47282	51512
CAM Data[1140]	21904	26134	30364	34594	38824	43054	47284	51514
CAM Data[1141]	21906	26136	30366	34596	38826	43056	47286	51516
CAM Data[1142]	21908	26138	30368	34598	38828	43058	47288	51518
CAM Data[1143]	21910	26140	30370	34600	38830	43060	47290	51520
CAM Data[1144]	21912	26142	30372	34602	38832	43062	47292	51522
CAM Data[1145]	21914	26144	30374	34604	38834	43064	47294	51524
CAM Data[1146]	21916	26146	30376	34606	38836	43066	47296	51526
CAM Data[1147]	21918	26148	30378	34608	38838	43068	47298	51528
CAM Data[1148]	21920	26150	30380	34610	38840	43070	47300	51530
CAM Data[1149]	21922	26152	30382	34612	38842	43072	47302	51532
CAM Data[1150]	21924	26154	30384	34614	38844	43074	47304	51534
CAM Data[1151]	21926	26156	30386	34616	38846	43076	47306	51536
CAM Data[1152]	21928	26158	30388	34618	38848	43078	47308	51538
CAM Data[1153]	21930	26160	30390	34620	38850	43080	47310	51540
CAM Data[1154]	21932	26162	30392	34622	38852	43082	47312	51542
CAM Data[1155]	21934	26164	30394	34624	38854	43084	47314	51544
CAM Data[1156]	21936	26166	30396	34626	38856	43086	47316	51546
CAM Data[1157]	21938	26168	30398	34628	38858	43088	47318	51548
CAM Data[1158]	21940	26170	30400	34630	38860	43090	47320	51550
CAM Data[1159]	21942	26172	30402	34632	38862	43092	47322	51552
CAM Data[1160]	21944	26174	30404	34634	38864	43094	47324	51554
CAM Data[1161]	21946	26176	30406	34636	38866	43096	47326	51556
CAM Data[1162]	21948	26178	30408	34638	38868	43098	47328	51558
CAM Data[1163]	21950	26180	30410	34640	38870	43100	47330	51560
CAM Data[1164]	21952	26182	30412	34642	38872	43102	47332	51562
CAM Data[1165]	21954	26184	30414	34644	38874	43104	47334	51564
CAM Data[1166]	21956	26186	30416	34646	38876	43106	47336	51566
CAM Data[1167]	21958	26188	30418	34648	38878	43108	47338	51568
CAM Data[1168]	21960	26190	30420	34650	38880	43110	47340	51570
CAM Data[1169]	21962	26192	30422	34652	38882	43112	47342	51572
CAM Data[1170]	21964	26194	30424	34654	38884	43114	47344	51574
CAM Data[1171]	21966	26196	30426	34656	38886	43116	47346	51576
CAM Data[1172]	21968	26198	30428	34658	38888	43118	47348	51578
CAM Data[1173]	21970	26200	30430	34660	38890	43120	47350	51580
CAM Data[1174]	21972	26202	30432	34662	38892	43122	47352	51582
CAM Data[1175]	21974	26204	30434	34664	38894	43124	47354	51584
CAM Data[1176]	21976	26206	30436	34666	38896	43126	47356	51586
CAM Data[1177]	21978	26208	30438	34668	38898	43128	47358	51588

	Block 1	Block 2	Block 3	Block 4	Block 5	Block 6	Block 7	Block 8
CAM Data[1178]	21980	26210	30440	34670	38900	43130	47360	51590
CAM Data[1179]	21982	26212	30442	34672	38902	43132	47362	51592
CAM Data[1180]	21984	26214	30444	34674	38904	43134	47364	51594
CAM Data[1181]	21986	26216	30446	34676	38906	43136	47366	51596
CAM Data[1182]	21988	26218	30448	34678	38908	43138	47368	51598
CAM Data[1183]	21990	26220	30450	34680	38910	43140	47370	51600
CAM Data[1184]	21992	26222	30452	34682	38912	43142	47372	51602
CAM Data[1185]	21994	26224	30454	34684	38914	43144	47374	51604
CAM Data[1186]	21996	26226	30456	34686	38916	43146	47376	51606
CAM Data[1187]	21998	26228	30458	34688	38918	43148	47378	51608
CAM Data[1188]	22000	26230	30460	34690	38920	43150	47380	51610
CAM Data[1189]	22002	26232	30462	34692	38922	43152	47382	51612
CAM Data[1190]	22004	26234	30464	34694	38924	43154	47384	51614
CAM Data[1191]	22006	26236	30466	34696	38926	43156	47386	51616
CAM Data[1192]	22008	26238	30468	34698	38928	43158	47388	51618
CAM Data[1193]	22010	26240	30470	34700	38930	43160	47390	51620
CAM Data[1194]	22012	26242	30472	34702	38932	43162	47392	51622
CAM Data[1195]	22014	26244	30474	34704	38934	43164	47394	51624
CAM Data[1196]	22016	26246	30476	34706	38936	43166	47396	51626
CAM Data[1197]	22018	26248	30478	34708	38938	43168	47398	51628
CAM Data[1198]	22020	26250	30480	34710	38940	43170	47400	51630
CAM Data[1199]	22022	26252	30482	34712	38942	43172	47402	51632
CAM Data[1200]	22024	26254	30484	34714	38944	43174	47404	51634
CAM Data[1201]	22026	26256	30486	34716	38946	43176	47406	51636
CAM Data[1202]	22028	26258	30488	34718	38948	43178	47408	51638
CAM Data[1203]	22030	26260	30490	34720	38950	43180	47410	51640
CAM Data[1204]	22032	26262	30492	34722	38952	43182	47412	51642
CAM Data[1205]	22034	26264	30494	34724	38954	43184	47414	51644
CAM Data[1206]	22036	26266	30496	34726	38956	43186	47416	51646
CAM Data[1207]	22038	26268	30498	34728	38958	43188	47418	51648
CAM Data[1208]	22040	26270	30500	34730	38960	43190	47420	51650
CAM Data[1209]	22042	26272	30502	34732	38962	43192	47422	51652
CAM Data[1210]	22044	26274	30504	34734	38964	43194	47424	51654
CAM Data[1211]	22046	26276	30506	34736	38966	43196	47426	51656
CAM Data[1212]	22048	26278	30508	34738	38968	43198	47428	51658
CAM Data[1213]	22050	26280	30510	34740	38970	43200	47430	51660
CAM Data[1214]	22052	26282	30512	34742	38972	43202	47432	51662
CAM Data[1215]	22054	26284	30514	34744	38974	43204	47434	51664
CAM Data[1216]	22056	26286	30516	34746	38976	43206	47436	51666
CAM Data[1217]	22058	26288	30518	34748	38978	43208	47438	51668
CAM Data[1218]	22060	26290	30520	34750	38980	43210	47440	51670
CAM Data[1219]	22062	26292	30522	34752	38982	43212	47442	51672
CAM Data[1220]	22064	26294	30524	34754	38984	43214	47444	51674
CAM Data[1221]	22066	26296	30526	34756	38986	43216	47446	51676
CAM Data[1222]	22068	26298	30528	34758	38988	43218	47448	51678
CAM Data[1223]	22070	26300	30530	34760	38990	43220	47450	51680
CAM Data[1224]	22072	26302	30532	34762	38992	43222	47452	51682

	Block 1	Block 2	Block 3	Block 4	Block 5	Block 6	Block 7	Block 8
CAM Data[1225]	22074	26304	30534	34764	38994	43224	47454	51684
CAM Data[1226]	22076	26306	30536	34766	38996	43226	47456	51686
CAM Data[1227]	22078	26308	30538	34768	38998	43228	47458	51688
CAM Data[1228]	22080	26310	30540	34770	39000	43230	47460	51690
CAM Data[1229]	22082	26312	30542	34772	39002	43232	47462	51692
CAM Data[1230]	22084	26314	30544	34774	39004	43234	47464	51694
CAM Data[1231]	22086	26316	30546	34776	39006	43236	47466	51696
CAM Data[1232]	22088	26318	30548	34778	39008	43238	47468	51698
CAM Data[1233]	22090	26320	30550	34780	39010	43240	47470	51700
CAM Data[1234]	22092	26322	30552	34782	39012	43242	47472	51702
CAM Data[1235]	22094	26324	30554	34784	39014	43244	47474	51704
CAM Data[1236]	22096	26326	30556	34786	39016	43246	47476	51706
CAM Data[1237]	22098	26328	30558	34788	39018	43248	47478	51708
CAM Data[1238]	22100	26330	30560	34790	39020	43250	47480	51710
CAM Data[1239]	22102	26332	30562	34792	39022	43252	47482	51712
CAM Data[1240]	22104	26334	30564	34794	39024	43254	47484	51714
CAM Data[1241]	22106	26336	30566	34796	39026	43256	47486	51716
CAM Data[1242]	22108	26338	30568	34798	39028	43258	47488	51718
CAM Data[1243]	22110	26340	30570	34800	39030	43260	47490	51720
CAM Data[1244]	22112	26342	30572	34802	39032	43262	47492	51722
CAM Data[1245]	22114	26344	30574	34804	39034	43264	47494	51724
CAM Data[1246]	22116	26346	30576	34806	39036	43266	47496	51726
CAM Data[1247]	22118	26348	30578	34808	39038	43268	47498	51728
CAM Data[1248]	22120	26350	30580	34810	39040	43270	47500	51730
CAM Data[1249]	22122	26352	30582	34812	39042	43272	47502	51732
CAM Data[1250]	22124	26354	30584	34814	39044	43274	47504	51734
CAM Data[1251]	22126	26356	30586	34816	39046	43276	47506	51736
CAM Data[1252]	22128	26358	30588	34818	39048	43278	47508	51738
CAM Data[1253]	22130	26360	30590	34820	39050	43280	47510	51740
CAM Data[1254]	22132	26362	30592	34822	39052	43282	47512	51742
CAM Data[1255]	22134	26364	30594	34824	39054	43284	47514	51744
CAM Data[1256]	22136	26366	30596	34826	39056	43286	47516	51746
CAM Data[1257]	22138	26368	30598	34828	39058	43288	47518	51748
CAM Data[1258]	22140	26370	30600	34830	39060	43290	47520	51750
CAM Data[1259]	22142	26372	30602	34832	39062	43292	47522	51752
CAM Data[1260]	22144	26374	30604	34834	39064	43294	47524	51754
CAM Data[1261]	22146	26376	30606	34836	39066	43296	47526	51756
CAM Data[1262]	22148	26378	30608	34838	39068	43298	47528	51758
CAM Data[1263]	22150	26380	30610	34840	39070	43300	47530	51760
CAM Data[1264]	22152	26382	30612	34842	39072	43302	47532	51762
CAM Data[1265]	22154	26384	30614	34844	39074	43304	47534	51764
CAM Data[1266]	22156	26386	30616	34846	39076	43306	47536	51766
CAM Data[1267]	22158	26388	30618	34848	39078	43308	47538	51768
CAM Data[1268]	22160	26390	30620	34850	39080	43310	47540	51770
CAM Data[1269]	22162	26392	30622	34852	39082	43312	47542	51772
CAM Data[1270]	22164	26394	30624	34854	39084	43314	47544	51774
CAM Data[1271]	22166	26396	30626	34856	39086	43316	47546	51776

	Block 1	Block 2	Block 3	Block 4	Block 5	Block 6	Block 7	Block 8
CAM Data[1272]	22168	26398	30628	34858	39088	43318	47548	51778
CAM Data[1273]	22170	26400	30630	34860	39090	43320	47550	51780
CAM Data[1274]	22172	26402	30632	34862	39092	43322	47552	51782
CAM Data[1275]	22174	26404	30634	34864	39094	43324	47554	51784
CAM Data[1276]	22176	26406	30636	34866	39096	43326	47556	51786
CAM Data[1277]	22178	26408	30638	34868	39098	43328	47558	51788
CAM Data[1278]	22180	26410	30640	34870	39100	43330	47560	51790
CAM Data[1279]	22182	26412	30642	34872	39102	43332	47562	51792
CAM Data[1280]	22184	26414	30644	34874	39104	43334	47564	51794
CAM Data[1281]	22186	26416	30646	34876	39106	43336	47566	51796
CAM Data[1282]	22188	26418	30648	34878	39108	43338	47568	51798
CAM Data[1283]	22190	26420	30650	34880	39110	43340	47570	51800
CAM Data[1284]	22192	26422	30652	34882	39112	43342	47572	51802
CAM Data[1285]	22194	26424	30654	34884	39114	43344	47574	51804
CAM Data[1286]	22196	26426	30656	34886	39116	43346	47576	51806
CAM Data[1287]	22198	26428	30658	34888	39118	43348	47578	51808
CAM Data[1288]	22200	26430	30660	34890	39120	43350	47580	51810
CAM Data[1289]	22202	26432	30662	34892	39122	43352	47582	51812
CAM Data[1290]	22204	26434	30664	34894	39124	43354	47584	51814
CAM Data[1291]	22206	26436	30666	34896	39126	43356	47586	51816
CAM Data[1292]	22208	26438	30668	34898	39128	43358	47588	51818
CAM Data[1293]	22210	26440	30670	34900	39130	43360	47590	51820
CAM Data[1294]	22212	26442	30672	34902	39132	43362	47592	51822
CAM Data[1295]	22214	26444	30674	34904	39134	43364	47594	51824
CAM Data[1296]	22216	26446	30676	34906	39136	43366	47596	51826
CAM Data[1297]	22218	26448	30678	34908	39138	43368	47598	51828
CAM Data[1298]	22220	26450	30680	34910	39140	43370	47600	51830
CAM Data[1299]	22222	26452	30682	34912	39142	43372	47602	51832
CAM Data[1300]	22224	26454	30684	34914	39144	43374	47604	51834
CAM Data[1301]	22226	26456	30686	34916	39146	43376	47606	51836
CAM Data[1302]	22228	26458	30688	34918	39148	43378	47608	51838
CAM Data[1303]	22230	26460	30690	34920	39150	43380	47610	51840
CAM Data[1304]	22232	26462	30692	34922	39152	43382	47612	51842
CAM Data[1305]	22234	26464	30694	34924	39154	43384	47614	51844
CAM Data[1306]	22236	26466	30696	34926	39156	43386	47616	51846
CAM Data[1307]	22238	26468	30698	34928	39158	43388	47618	51848
CAM Data[1308]	22240	26470	30700	34930	39160	43390	47620	51850
CAM Data[1309]	22242	26472	30702	34932	39162	43392	47622	51852
CAM Data[1310]	22244	26474	30704	34934	39164	43394	47624	51854
CAM Data[1311]	22246	26476	30706	34936	39166	43396	47626	51856
CAM Data[1312]	22248	26478	30708	34938	39168	43398	47628	51858
CAM Data[1313]	22250	26480	30710	34940	39170	43400	47630	51860
CAM Data[1314]	22252	26482	30712	34942	39172	43402	47632	51862
CAM Data[1315]	22254	26484	30714	34944	39174	43404	47634	51864
CAM Data[1316]	22256	26486	30716	34946	39176	43406	47636	51866
CAM Data[1317]	22258	26488	30718	34948	39178	43408	47638	51868
CAM Data[1318]	22260	26490	30720	34950	39180	43410	47640	51870

	Block 1	Block 2	Block 3	Block 4	Block 5	Block 6	Block 7	Block 8
CAM Data[1319]	22262	26492	30722	34952	39182	43412	47642	51872
CAM Data[1320]	22264	26494	30724	34954	39184	43414	47644	51874
CAM Data[1321]	22266	26496	30726	34956	39186	43416	47646	51876
CAM Data[1322]	22268	26498	30728	34958	39188	43418	47648	51878
CAM Data[1323]	22270	26500	30730	34960	39190	43420	47650	51880
CAM Data[1324]	22272	26502	30732	34962	39192	43422	47652	51882
CAM Data[1325]	22274	26504	30734	34964	39194	43424	47654	51884
CAM Data[1326]	22276	26506	30736	34966	39196	43426	47656	51886
CAM Data[1327]	22278	26508	30738	34968	39198	43428	47658	51888
CAM Data[1328]	22280	26510	30740	34970	39200	43430	47660	51890
CAM Data[1329]	22282	26512	30742	34972	39202	43432	47662	51892
CAM Data[1330]	22284	26514	30744	34974	39204	43434	47664	51894
CAM Data[1331]	22286	26516	30746	34976	39206	43436	47666	51896
CAM Data[1332]	22288	26518	30748	34978	39208	43438	47668	51898
CAM Data[1333]	22290	26520	30750	34980	39210	43440	47670	51900
CAM Data[1334]	22292	26522	30752	34982	39212	43442	47672	51902
CAM Data[1335]	22294	26524	30754	34984	39214	43444	47674	51904
CAM Data[1336]	22296	26526	30756	34986	39216	43446	47676	51906
CAM Data[1337]	22298	26528	30758	34988	39218	43448	47678	51908
CAM Data[1338]	22300	26530	30760	34990	39220	43450	47680	51910
CAM Data[1339]	22302	26532	30762	34992	39222	43452	47682	51912
CAM Data[1340]	22304	26534	30764	34994	39224	43454	47684	51914
CAM Data[1341]	22306	26536	30766	34996	39226	43456	47686	51916
CAM Data[1342]	22308	26538	30768	34998	39228	43458	47688	51918
CAM Data[1343]	22310	26540	30770	35000	39230	43460	47690	51920
CAM Data[1344]	22312	26542	30772	35002	39232	43462	47692	51922
CAM Data[1345]	22314	26544	30774	35004	39234	43464	47694	51924
CAM Data[1346]	22316	26546	30776	35006	39236	43466	47696	51926
CAM Data[1347]	22318	26548	30778	35008	39238	43468	47698	51928
CAM Data[1348]	22320	26550	30780	35010	39240	43470	47700	51930
CAM Data[1349]	22322	26552	30782	35012	39242	43472	47702	51932
CAM Data[1350]	22324	26554	30784	35014	39244	43474	47704	51934
CAM Data[1351]	22326	26556	30786	35016	39246	43476	47706	51936
CAM Data[1352]	22328	26558	30788	35018	39248	43478	47708	51938
CAM Data[1353]	22330	26560	30790	35020	39250	43480	47710	51940
CAM Data[1354]	22332	26562	30792	35022	39252	43482	47712	51942
CAM Data[1355]	22334	26564	30794	35024	39254	43484	47714	51944
CAM Data[1356]	22336	26566	30796	35026	39256	43486	47716	51946
CAM Data[1357]	22338	26568	30798	35028	39258	43488	47718	51948
CAM Data[1358]	22340	26570	30800	35030	39260	43490	47720	51950
CAM Data[1359]	22342	26572	30802	35032	39262	43492	47722	51952
CAM Data[1360]	22344	26574	30804	35034	39264	43494	47724	51954
CAM Data[1361]	22346	26576	30806	35036	39266	43496	47726	51956
CAM Data[1362]	22348	26578	30808	35038	39268	43498	47728	51958
CAM Data[1363]	22350	26580	30810	35040	39270	43500	47730	51960
CAM Data[1364]	22352	26582	30812	35042	39272	43502	47732	51962
CAM Data[1365]	22354	26584	30814	35044	39274	43504	47734	51964

	Block 1	Block 2	Block 3	Block 4	Block 5	Block 6	Block 7	Block 8
CAM Data[1366]	22356	26586	30816	35046	39276	43506	47736	51966
CAM Data[1367]	22358	26588	30818	35048	39278	43508	47738	51968
CAM Data[1368]	22360	26590	30820	35050	39280	43510	47740	51970
CAM Data[1369]	22362	26592	30822	35052	39282	43512	47742	51972
CAM Data[1370]	22364	26594	30824	35054	39284	43514	47744	51974
CAM Data[1371]	22366	26596	30826	35056	39286	43516	47746	51976
CAM Data[1372]	22368	26598	30828	35058	39288	43518	47748	51978
CAM Data[1373]	22370	26600	30830	35060	39290	43520	47750	51980
CAM Data[1374]	22372	26602	30832	35062	39292	43522	47752	51982
CAM Data[1375]	22374	26604	30834	35064	39294	43524	47754	51984
CAM Data[1376]	22376	26606	30836	35066	39296	43526	47756	51986
CAM Data[1377]	22378	26608	30838	35068	39298	43528	47758	51988
CAM Data[1378]	22380	26610	30840	35070	39300	43530	47760	51990
CAM Data[1379]	22382	26612	30842	35072	39302	43532	47762	51992
CAM Data[1380]	22384	26614	30844	35074	39304	43534	47764	51994
CAM Data[1381]	22386	26616	30846	35076	39306	43536	47766	51996
CAM Data[1382]	22388	26618	30848	35078	39308	43538	47768	51998
CAM Data[1383]	22390	26620	30850	35080	39310	43540	47770	52000
CAM Data[1384]	22392	26622	30852	35082	39312	43542	47772	52002
CAM Data[1385]	22394	26624	30854	35084	39314	43544	47774	52004
CAM Data[1386]	22396	26626	30856	35086	39316	43546	47776	52006
CAM Data[1387]	22398	26628	30858	35088	39318	43548	47778	52008
CAM Data[1388]	22400	26630	30860	35090	39320	43550	47780	52010
CAM Data[1389]	22402	26632	30862	35092	39322	43552	47782	52012
CAM Data[1390]	22404	26634	30864	35094	39324	43554	47784	52014
CAM Data[1391]	22406	26636	30866	35096	39326	43556	47786	52016
CAM Data[1392]	22408	26638	30868	35098	39328	43558	47788	52018
CAM Data[1393]	22410	26640	30870	35100	39330	43560	47790	52020
CAM Data[1394]	22412	26642	30872	35102	39332	43562	47792	52022
CAM Data[1395]	22414	26644	30874	35104	39334	43564	47794	52024
CAM Data[1396]	22416	26646	30876	35106	39336	43566	47796	52026
CAM Data[1397]	22418	26648	30878	35108	39338	43568	47798	52028
CAM Data[1398]	22420	26650	30880	35110	39340	43570	47800	52030
CAM Data[1399]	22422	26652	30882	35112	39342	43572	47802	52032
CAM Data[1400]	22424	26654	30884	35114	39344	43574	47804	52034
CAM Data[1401]	22426	26656	30886	35116	39346	43576	47806	52036
CAM Data[1402]	22428	26658	30888	35118	39348	43578	47808	52038
CAM Data[1403]	22430	26660	30890	35120	39350	43580	47810	52040
CAM Data[1404]	22432	26662	30892	35122	39352	43582	47812	52042
CAM Data[1405]	22434	26664	30894	35124	39354	43584	47814	52044
CAM Data[1406]	22436	26666	30896	35126	39356	43586	47816	52046
CAM Data[1407]	22438	26668	30898	35128	39358	43588	47818	52048
CAM Data[1408]	22440	26670	30900	35130	39360	43590	47820	52050
CAM Data[1409]	22442	26672	30902	35132	39362	43592	47822	52052
CAM Data[1410]	22444	26674	30904	35134	39364	43594	47824	52054
CAM Data[1411]	22446	26676	30906	35136	39366	43596	47826	52056
CAM Data[1412]	22448	26678	30908	35138	39368	43598	47828	52058

	Block 1	Block 2	Block 3	Block 4	Block 5	Block 6	Block 7	Block 8
CAM Data[1413]	22450	26680	30910	35140	39370	43600	47830	52060
CAM Data[1414]	22452	26682	30912	35142	39372	43602	47832	52062
CAM Data[1415]	22454	26684	30914	35144	39374	43604	47834	52064
CAM Data[1416]	22456	26686	30916	35146	39376	43606	47836	52066
CAM Data[1417]	22458	26688	30918	35148	39378	43608	47838	52068
CAM Data[1418]	22460	26690	30920	35150	39380	43610	47840	52070
CAM Data[1419]	22462	26692	30922	35152	39382	43612	47842	52072
CAM Data[1420]	22464	26694	30924	35154	39384	43614	47844	52074
CAM Data[1421]	22466	26696	30926	35156	39386	43616	47846	52076
CAM Data[1422]	22468	26698	30928	35158	39388	43618	47848	52078
CAM Data[1423]	22470	26700	30930	35160	39390	43620	47850	52080
CAM Data[1424]	22472	26702	30932	35162	39392	43622	47852	52082
CAM Data[1425]	22474	26704	30934	35164	39394	43624	47854	52084
CAM Data[1426]	22476	26706	30936	35166	39396	43626	47856	52086
CAM Data[1427]	22478	26708	30938	35168	39398	43628	47858	52088
CAM Data[1428]	22480	26710	30940	35170	39400	43630	47860	52090
CAM Data[1429]	22482	26712	30942	35172	39402	43632	47862	52092
CAM Data[1430]	22484	26714	30944	35174	39404	43634	47864	52094
CAM Data[1431]	22486	26716	30946	35176	39406	43636	47866	52096
CAM Data[1432]	22488	26718	30948	35178	39408	43638	47868	52098
CAM Data[1433]	22490	26720	30950	35180	39410	43640	47870	52100
CAM Data[1434]	22492	26722	30952	35182	39412	43642	47872	52102
CAM Data[1435]	22494	26724	30954	35184	39414	43644	47874	52104
CAM Data[1436]	22496	26726	30956	35186	39416	43646	47876	52106
CAM Data[1437]	22498	26728	30958	35188	39418	43648	47878	52108
CAM Data[1438]	22500	26730	30960	35190	39420	43650	47880	52110
CAM Data[1439]	22502	26732	30962	35192	39422	43652	47882	52112
CAM Data[1440]	22504	26734	30964	35194	39424	43654	47884	52114
CAM Data[1441]	22506	26736	30966	35196	39426	43656	47886	52116
CAM Data[1442]	22508	26738	30968	35198	39428	43658	47888	52118
CAM Data[1443]	22510	26740	30970	35200	39430	43660	47890	52120
CAM Data[1444]	22512	26742	30972	35202	39432	43662	47892	52122
CAM Data[1445]	22514	26744	30974	35204	39434	43664	47894	52124
CAM Data[1446]	22516	26746	30976	35206	39436	43666	47896	52126
CAM Data[1447]	22518	26748	30978	35208	39438	43668	47898	52128
CAM Data[1448]	22520	26750	30980	35210	39440	43670	47900	52130
CAM Data[1449]	22522	26752	30982	35212	39442	43672	47902	52132
CAM Data[1450]	22524	26754	30984	35214	39444	43674	47904	52134
CAM Data[1451]	22526	26756	30986	35216	39446	43676	47906	52136
CAM Data[1452]	22528	26758	30988	35218	39448	43678	47908	52138
CAM Data[1453]	22530	26760	30990	35220	39450	43680	47910	52140
CAM Data[1454]	22532	26762	30992	35222	39452	43682	47912	52142
CAM Data[1455]	22534	26764	30994	35224	39454	43684	47914	52144
CAM Data[1456]	22536	26766	30996	35226	39456	43686	47916	52146
CAM Data[1457]	22538	26768	30998	35228	39458	43688	47918	52148
CAM Data[1458]	22540	26770	31000	35230	39460	43690	47920	52150
CAM Data[1459]	22542	26772	31002	35232	39462	43692	47922	52152

	Block 1	Block 2	Block 3	Block 4	Block 5	Block 6	Block 7	Block 8
CAM Data[1460]	22544	26774	31004	35234	39464	43694	47924	52154
CAM Data[1461]	22546	26776	31006	35236	39466	43696	47926	52156
CAM Data[1462]	22548	26778	31008	35238	39468	43698	47928	52158
CAM Data[1463]	22550	26780	31010	35240	39470	43700	47930	52160
CAM Data[1464]	22552	26782	31012	35242	39472	43702	47932	52162
CAM Data[1465]	22554	26784	31014	35244	39474	43704	47934	52164
CAM Data[1466]	22556	26786	31016	35246	39476	43706	47936	52166
CAM Data[1467]	22558	26788	31018	35248	39478	43708	47938	52168
CAM Data[1468]	22560	26790	31020	35250	39480	43710	47940	52170
CAM Data[1469]	22562	26792	31022	35252	39482	43712	47942	52172
CAM Data[1470]	22564	26794	31024	35254	39484	43714	47944	52174
CAM Data[1471]	22566	26796	31026	35256	39486	43716	47946	52176
CAM Data[1472]	22568	26798	31028	35258	39488	43718	47948	52178
CAM Data[1473]	22570	26800	31030	35260	39490	43720	47950	52180
CAM Data[1474]	22572	26802	31032	35262	39492	43722	47952	52182
CAM Data[1475]	22574	26804	31034	35264	39494	43724	47954	52184
CAM Data[1476]	22576	26806	31036	35266	39496	43726	47956	52186
CAM Data[1477]	22578	26808	31038	35268	39498	43728	47958	52188
CAM Data[1478]	22580	26810	31040	35270	39500	43730	47960	52190
CAM Data[1479]	22582	26812	31042	35272	39502	43732	47962	52192
CAM Data[1480]	22584	26814	31044	35274	39504	43734	47964	52194
CAM Data[1481]	22586	26816	31046	35276	39506	43736	47966	52196
CAM Data[1482]	22588	26818	31048	35278	39508	43738	47968	52198
CAM Data[1483]	22590	26820	31050	35280	39510	43740	47970	52200
CAM Data[1484]	22592	26822	31052	35282	39512	43742	47972	52202
CAM Data[1485]	22594	26824	31054	35284	39514	43744	47974	52204
CAM Data[1486]	22596	26826	31056	35286	39516	43746	47976	52206
CAM Data[1487]	22598	26828	31058	35288	39518	43748	47978	52208
CAM Data[1488]	22600	26830	31060	35290	39520	43750	47980	52210
CAM Data[1489]	22602	26832	31062	35292	39522	43752	47982	52212
CAM Data[1490]	22604	26834	31064	35294	39524	43754	47984	52214
CAM Data[1491]	22606	26836	31066	35296	39526	43756	47986	52216
CAM Data[1492]	22608	26838	31068	35298	39528	43758	47988	52218
CAM Data[1493]	22610	26840	31070	35300	39530	43760	47990	52220
CAM Data[1494]	22612	26842	31072	35302	39532	43762	47992	52222
CAM Data[1495]	22614	26844	31074	35304	39534	43764	47994	52224
CAM Data[1496]	22616	26846	31076	35306	39536	43766	47996	52226
CAM Data[1497]	22618	26848	31078	35308	39538	43768	47998	52228
CAM Data[1498]	22620	26850	31080	35310	39540	43770	48000	52230
CAM Data[1499]	22622	26852	31082	35312	39542	43772	48002	52232
CAM Data[1500]	22624	26854	31084	35314	39544	43774	48004	52234
CAM Data[1501]	22626	26856	31086	35316	39546	43776	48006	52236
CAM Data[1502]	22628	26858	31088	35318	39548	43778	48008	52238
CAM Data[1503]	22630	26860	31090	35320	39550	43780	48010	52240
CAM Data[1504]	22632	26862	31092	35322	39552	43782	48012	52242
CAM Data[1505]	22634	26864	31094	35324	39554	43784	48014	52244
CAM Data[1506]	22636	26866	31096	35326	39556	43786	48016	52246

	Block 1	Block 2	Block 3	Block 4	Block 5	Block 6	Block 7	Block 8
CAM Data[1507]	22638	26868	31098	35328	39558	43788	48018	52248
CAM Data[1508]	22640	26870	31100	35330	39560	43790	48020	52250
CAM Data[1509]	22642	26872	31102	35332	39562	43792	48022	52252
CAM Data[1510]	22644	26874	31104	35334	39564	43794	48024	52254
CAM Data[1511]	22646	26876	31106	35336	39566	43796	48026	52256
CAM Data[1512]	22648	26878	31108	35338	39568	43798	48028	52258
CAM Data[1513]	22650	26880	31110	35340	39570	43800	48030	52260
CAM Data[1514]	22652	26882	31112	35342	39572	43802	48032	52262
CAM Data[1515]	22654	26884	31114	35344	39574	43804	48034	52264
CAM Data[1516]	22656	26886	31116	35346	39576	43806	48036	52266
CAM Data[1517]	22658	26888	31118	35348	39578	43808	48038	52268
CAM Data[1518]	22660	26890	31120	35350	39580	43810	48040	52270
CAM Data[1519]	22662	26892	31122	35352	39582	43812	48042	52272
CAM Data[1520]	22664	26894	31124	35354	39584	43814	48044	52274
CAM Data[1521]	22666	26896	31126	35356	39586	43816	48046	52276
CAM Data[1522]	22668	26898	31128	35358	39588	43818	48048	52278
CAM Data[1523]	22670	26900	31130	35360	39590	43820	48050	52280
CAM Data[1524]	22672	26902	31132	35362	39592	43822	48052	52282
CAM Data[1525]	22674	26904	31134	35364	39594	43824	48054	52284
CAM Data[1526]	22676	26906	31136	35366	39596	43826	48056	52286
CAM Data[1527]	22678	26908	31138	35368	39598	43828	48058	52288
CAM Data[1528]	22680	26910	31140	35370	39600	43830	48060	52290
CAM Data[1529]	22682	26912	31142	35372	39602	43832	48062	52292
CAM Data[1530]	22684	26914	31144	35374	39604	43834	48064	52294
CAM Data[1531]	22686	26916	31146	35376	39606	43836	48066	52296
CAM Data[1532]	22688	26918	31148	35378	39608	43838	48068	52298
CAM Data[1533]	22690	26920	31150	35380	39610	43840	48070	52300
CAM Data[1534]	22692	26922	31152	35382	39612	43842	48072	52302
CAM Data[1535]	22694	26924	31154	35384	39614	43844	48074	52304
CAM Data[1536]	22696	26926	31156	35386	39616	43846	48076	52306
CAM Data[1537]	22698	26928	31158	35388	39618	43848	48078	52308
CAM Data[1538]	22700	26930	31160	35390	39620	43850	48080	52310
CAM Data[1539]	22702	26932	31162	35392	39622	43852	48082	52312
CAM Data[1540]	22704	26934	31164	35394	39624	43854	48084	52314
CAM Data[1541]	22706	26936	31166	35396	39626	43856	48086	52316
CAM Data[1542]	22708	26938	31168	35398	39628	43858	48088	52318
CAM Data[1543]	22710	26940	31170	35400	39630	43860	48090	52320
CAM Data[1544]	22712	26942	31172	35402	39632	43862	48092	52322
CAM Data[1545]	22714	26944	31174	35404	39634	43864	48094	52324
CAM Data[1546]	22716	26946	31176	35406	39636	43866	48096	52326
CAM Data[1547]	22718	26948	31178	35408	39638	43868	48098	52328
CAM Data[1548]	22720	26950	31180	35410	39640	43870	48100	52330
CAM Data[1549]	22722	26952	31182	35412	39642	43872	48102	52332
CAM Data[1550]	22724	26954	31184	35414	39644	43874	48104	52334
CAM Data[1551]	22726	26956	31186	35416	39646	43876	48106	52336
CAM Data[1552]	22728	26958	31188	35418	39648	43878	48108	52338
CAM Data[1553]	22730	26960	31190	35420	39650	43880	48110	52340

	Block 1	Block 2	Block 3	Block 4	Block 5	Block 6	Block 7	Block 8
CAM Data[1554]	22732	26962	31192	35422	39652	43882	48112	52342
CAM Data[1555]	22734	26964	31194	35424	39654	43884	48114	52344
CAM Data[1556]	22736	26966	31196	35426	39656	43886	48116	52346
CAM Data[1557]	22738	26968	31198	35428	39658	43888	48118	52348
CAM Data[1558]	22740	26970	31200	35430	39660	43890	48120	52350
CAM Data[1559]	22742	26972	31202	35432	39662	43892	48122	52352
CAM Data[1560]	22744	26974	31204	35434	39664	43894	48124	52354
CAM Data[1561]	22746	26976	31206	35436	39666	43896	48126	52356
CAM Data[1562]	22748	26978	31208	35438	39668	43898	48128	52358
CAM Data[1563]	22750	26980	31210	35440	39670	43900	48130	52360
CAM Data[1564]	22752	26982	31212	35442	39672	43902	48132	52362
CAM Data[1565]	22754	26984	31214	35444	39674	43904	48134	52364
CAM Data[1566]	22756	26986	31216	35446	39676	43906	48136	52366
CAM Data[1567]	22758	26988	31218	35448	39678	43908	48138	52368
CAM Data[1568]	22760	26990	31220	35450	39680	43910	48140	52370
CAM Data[1569]	22762	26992	31222	35452	39682	43912	48142	52372
CAM Data[1570]	22764	26994	31224	35454	39684	43914	48144	52374
CAM Data[1571]	22766	26996	31226	35456	39686	43916	48146	52376
CAM Data[1572]	22768	26998	31228	35458	39688	43918	48148	52378
CAM Data[1573]	22770	27000	31230	35460	39690	43920	48150	52380
CAM Data[1574]	22772	27002	31232	35462	39692	43922	48152	52382
CAM Data[1575]	22774	27004	31234	35464	39694	43924	48154	52384
CAM Data[1576]	22776	27006	31236	35466	39696	43926	48156	52386
CAM Data[1577]	22778	27008	31238	35468	39698	43928	48158	52388
CAM Data[1578]	22780	27010	31240	35470	39700	43930	48160	52390
CAM Data[1579]	22782	27012	31242	35472	39702	43932	48162	52392
CAM Data[1580]	22784	27014	31244	35474	39704	43934	48164	52394
CAM Data[1581]	22786	27016	31246	35476	39706	43936	48166	52396
CAM Data[1582]	22788	27018	31248	35478	39708	43938	48168	52398
CAM Data[1583]	22790	27020	31250	35480	39710	43940	48170	52400
CAM Data[1584]	22792	27022	31252	35482	39712	43942	48172	52402
CAM Data[1585]	22794	27024	31254	35484	39714	43944	48174	52404
CAM Data[1586]	22796	27026	31256	35486	39716	43946	48176	52406
CAM Data[1587]	22798	27028	31258	35488	39718	43948	48178	52408
CAM Data[1588]	22800	27030	31260	35490	39720	43950	48180	52410
CAM Data[1589]	22802	27032	31262	35492	39722	43952	48182	52412
CAM Data[1590]	22804	27034	31264	35494	39724	43954	48184	52414
CAM Data[1591]	22806	27036	31266	35496	39726	43956	48186	52416
CAM Data[1592]	22808	27038	31268	35498	39728	43958	48188	52418
CAM Data[1593]	22810	27040	31270	35500	39730	43960	48190	52420
CAM Data[1594]	22812	27042	31272	35502	39732	43962	48192	52422
CAM Data[1595]	22814	27044	31274	35504	39734	43964	48194	52424
CAM Data[1596]	22816	27046	31276	35506	39736	43966	48196	52426
CAM Data[1597]	22818	27048	31278	35508	39738	43968	48198	52428
CAM Data[1598]	22820	27050	31280	35510	39740	43970	48200	52430
CAM Data[1599]	22822	27052	31282	35512	39742	43972	48202	52432
CAM Data[1600]	22824	27054	31284	35514	39744	43974	48204	52434

	Block 1	Block 2	Block 3	Block 4	Block 5	Block 6	Block 7	Block 8
CAM Data[1601]	22826	27056	31286	35516	39746	43976	48206	52436
CAM Data[1602]	22828	27058	31288	35518	39748	43978	48208	52438
CAM Data[1603]	22830	27060	31290	35520	39750	43980	48210	52440
CAM Data[1604]	22832	27062	31292	35522	39752	43982	48212	52442
CAM Data[1605]	22834	27064	31294	35524	39754	43984	48214	52444
CAM Data[1606]	22836	27066	31296	35526	39756	43986	48216	52446
CAM Data[1607]	22838	27068	31298	35528	39758	43988	48218	52448
CAM Data[1608]	22840	27070	31300	35530	39760	43990	48220	52450
CAM Data[1609]	22842	27072	31302	35532	39762	43992	48222	52452
CAM Data[1610]	22844	27074	31304	35534	39764	43994	48224	52454
CAM Data[1611]	22846	27076	31306	35536	39766	43996	48226	52456
CAM Data[1612]	22848	27078	31308	35538	39768	43998	48228	52458
CAM Data[1613]	22850	27080	31310	35540	39770	44000	48230	52460
CAM Data[1614]	22852	27082	31312	35542	39772	44002	48232	52462
CAM Data[1615]	22854	27084	31314	35544	39774	44004	48234	52464
CAM Data[1616]	22856	27086	31316	35546	39776	44006	48236	52466
CAM Data[1617]	22858	27088	31318	35548	39778	44008	48238	52468
CAM Data[1618]	22860	27090	31320	35550	39780	44010	48240	52470
CAM Data[1619]	22862	27092	31322	35552	39782	44012	48242	52472
CAM Data[1620]	22864	27094	31324	35554	39784	44014	48244	52474
CAM Data[1621]	22866	27096	31326	35556	39786	44016	48246	52476
CAM Data[1622]	22868	27098	31328	35558	39788	44018	48248	52478
CAM Data[1623]	22870	27100	31330	35560	39790	44020	48250	52480
CAM Data[1624]	22872	27102	31332	35562	39792	44022	48252	52482
CAM Data[1625]	22874	27104	31334	35564	39794	44024	48254	52484
CAM Data[1626]	22876	27106	31336	35566	39796	44026	48256	52486
CAM Data[1627]	22878	27108	31338	35568	39798	44028	48258	52488
CAM Data[1628]	22880	27110	31340	35570	39800	44030	48260	52490
CAM Data[1629]	22882	27112	31342	35572	39802	44032	48262	52492
CAM Data[1630]	22884	27114	31344	35574	39804	44034	48264	52494
CAM Data[1631]	22886	27116	31346	35576	39806	44036	48266	52496
CAM Data[1632]	22888	27118	31348	35578	39808	44038	48268	52498
CAM Data[1633]	22890	27120	31350	35580	39810	44040	48270	52500
CAM Data[1634]	22892	27122	31352	35582	39812	44042	48272	52502
CAM Data[1635]	22894	27124	31354	35584	39814	44044	48274	52504
CAM Data[1636]	22896	27126	31356	35586	39816	44046	48276	52506
CAM Data[1637]	22898	27128	31358	35588	39818	44048	48278	52508
CAM Data[1638]	22900	27130	31360	35590	39820	44050	48280	52510
CAM Data[1639]	22902	27132	31362	35592	39822	44052	48282	52512
CAM Data[1640]	22904	27134	31364	35594	39824	44054	48284	52514
CAM Data[1641]	22906	27136	31366	35596	39826	44056	48286	52516
CAM Data[1642]	22908	27138	31368	35598	39828	44058	48288	52518
CAM Data[1643]	22910	27140	31370	35600	39830	44060	48290	52520
CAM Data[1644]	22912	27142	31372	35602	39832	44062	48292	52522
CAM Data[1645]	22914	27144	31374	35604	39834	44064	48294	52524
CAM Data[1646]	22916	27146	31376	35606	39836	44066	48296	52526
CAM Data[1647]	22918	27148	31378	35608	39838	44068	48298	52528

	Block 1	Block 2	Block 3	Block 4	Block 5	Block 6	Block 7	Block 8
CAM Data[1648]	22920	27150	31380	35610	39840	44070	48300	52530
CAM Data[1649]	22922	27152	31382	35612	39842	44072	48302	52532
CAM Data[1650]	22924	27154	31384	35614	39844	44074	48304	52534
CAM Data[1651]	22926	27156	31386	35616	39846	44076	48306	52536
CAM Data[1652]	22928	27158	31388	35618	39848	44078	48308	52538
CAM Data[1653]	22930	27160	31390	35620	39850	44080	48310	52540
CAM Data[1654]	22932	27162	31392	35622	39852	44082	48312	52542
CAM Data[1655]	22934	27164	31394	35624	39854	44084	48314	52544
CAM Data[1656]	22936	27166	31396	35626	39856	44086	48316	52546
CAM Data[1657]	22938	27168	31398	35628	39858	44088	48318	52548
CAM Data[1658]	22940	27170	31400	35630	39860	44090	48320	52550
CAM Data[1659]	22942	27172	31402	35632	39862	44092	48322	52552
CAM Data[1660]	22944	27174	31404	35634	39864	44094	48324	52554
CAM Data[1661]	22946	27176	31406	35636	39866	44096	48326	52556
CAM Data[1662]	22948	27178	31408	35638	39868	44098	48328	52558
CAM Data[1663]	22950	27180	31410	35640	39870	44100	48330	52560
CAM Data[1664]	22952	27182	31412	35642	39872	44102	48332	52562
CAM Data[1665]	22954	27184	31414	35644	39874	44104	48334	52564
CAM Data[1666]	22956	27186	31416	35646	39876	44106	48336	52566
CAM Data[1667]	22958	27188	31418	35648	39878	44108	48338	52568
CAM Data[1668]	22960	27190	31420	35650	39880	44110	48340	52570
CAM Data[1669]	22962	27192	31422	35652	39882	44112	48342	52572
CAM Data[1670]	22964	27194	31424	35654	39884	44114	48344	52574
CAM Data[1671]	22966	27196	31426	35656	39886	44116	48346	52576
CAM Data[1672]	22968	27198	31428	35658	39888	44118	48348	52578
CAM Data[1673]	22970	27200	31430	35660	39890	44120	48350	52580
CAM Data[1674]	22972	27202	31432	35662	39892	44122	48352	52582
CAM Data[1675]	22974	27204	31434	35664	39894	44124	48354	52584
CAM Data[1676]	22976	27206	31436	35666	39896	44126	48356	52586
CAM Data[1677]	22978	27208	31438	35668	39898	44128	48358	52588
CAM Data[1678]	22980	27210	31440	35670	39900	44130	48360	52590
CAM Data[1679]	22982	27212	31442	35672	39902	44132	48362	52592
CAM Data[1680]	22984	27214	31444	35674	39904	44134	48364	52594
CAM Data[1681]	22986	27216	31446	35676	39906	44136	48366	52596
CAM Data[1682]	22988	27218	31448	35678	39908	44138	48368	52598
CAM Data[1683]	22990	27220	31450	35680	39910	44140	48370	52600
CAM Data[1684]	22992	27222	31452	35682	39912	44142	48372	52602
CAM Data[1685]	22994	27224	31454	35684	39914	44144	48374	52604
CAM Data[1686]	22996	27226	31456	35686	39916	44146	48376	52606
CAM Data[1687]	22998	27228	31458	35688	39918	44148	48378	52608
CAM Data[1688]	23000	27230	31460	35690	39920	44150	48380	52610
CAM Data[1689]	23002	27232	31462	35692	39922	44152	48382	52612
CAM Data[1690]	23004	27234	31464	35694	39924	44154	48384	52614
CAM Data[1691]	23006	27236	31466	35696	39926	44156	48386	52616
CAM Data[1692]	23008	27238	31468	35698	39928	44158	48388	52618
CAM Data[1693]	23010	27240	31470	35700	39930	44160	48390	52620
CAM Data[1694]	23012	27242	31472	35702	39932	44162	48392	52622

	Block 1	Block 2	Block 3	Block 4	Block 5	Block 6	Block 7	Block 8
CAM Data[1695]	23014	27244	31474	35704	39934	44164	48394	52624
CAM Data[1696]	23016	27246	31476	35706	39936	44166	48396	52626
CAM Data[1697]	23018	27248	31478	35708	39938	44168	48398	52628
CAM Data[1698]	23020	27250	31480	35710	39940	44170	48400	52630
CAM Data[1699]	23022	27252	31482	35712	39942	44172	48402	52632
CAM Data[1700]	23024	27254	31484	35714	39944	44174	48404	52634
CAM Data[1701]	23026	27256	31486	35716	39946	44176	48406	52636
CAM Data[1702]	23028	27258	31488	35718	39948	44178	48408	52638
CAM Data[1703]	23030	27260	31490	35720	39950	44180	48410	52640
CAM Data[1704]	23032	27262	31492	35722	39952	44182	48412	52642
CAM Data[1705]	23034	27264	31494	35724	39954	44184	48414	52644
CAM Data[1706]	23036	27266	31496	35726	39956	44186	48416	52646
CAM Data[1707]	23038	27268	31498	35728	39958	44188	48418	52648
CAM Data[1708]	23040	27270	31500	35730	39960	44190	48420	52650
CAM Data[1709]	23042	27272	31502	35732	39962	44192	48422	52652
CAM Data[1710]	23044	27274	31504	35734	39964	44194	48424	52654
CAM Data[1711]	23046	27276	31506	35736	39966	44196	48426	52656
CAM Data[1712]	23048	27278	31508	35738	39968	44198	48428	52658
CAM Data[1713]	23050	27280	31510	35740	39970	44200	48430	52660
CAM Data[1714]	23052	27282	31512	35742	39972	44202	48432	52662
CAM Data[1715]	23054	27284	31514	35744	39974	44204	48434	52664
CAM Data[1716]	23056	27286	31516	35746	39976	44206	48436	52666
CAM Data[1717]	23058	27288	31518	35748	39978	44208	48438	52668
CAM Data[1718]	23060	27290	31520	35750	39980	44210	48440	52670
CAM Data[1719]	23062	27292	31522	35752	39982	44212	48442	52672
CAM Data[1720]	23064	27294	31524	35754	39984	44214	48444	52674
CAM Data[1721]	23066	27296	31526	35756	39986	44216	48446	52676
CAM Data[1722]	23068	27298	31528	35758	39988	44218	48448	52678
CAM Data[1723]	23070	27300	31530	35760	39990	44220	48450	52680
CAM Data[1724]	23072	27302	31532	35762	39992	44222	48452	52682
CAM Data[1725]	23074	27304	31534	35764	39994	44224	48454	52684
CAM Data[1726]	23076	27306	31536	35766	39996	44226	48456	52686
CAM Data[1727]	23078	27308	31538	35768	39998	44228	48458	52688
CAM Data[1728]	23080	27310	31540	35770	40000	44230	48460	52690
CAM Data[1729]	23082	27312	31542	35772	40002	44232	48462	52692
CAM Data[1730]	23084	27314	31544	35774	40004	44234	48464	52694
CAM Data[1731]	23086	27316	31546	35776	40006	44236	48466	52696
CAM Data[1732]	23088	27318	31548	35778	40008	44238	48468	52698
CAM Data[1733]	23090	27320	31550	35780	40010	44240	48470	52700
CAM Data[1734]	23092	27322	31552	35782	40012	44242	48472	52702
CAM Data[1735]	23094	27324	31554	35784	40014	44244	48474	52704
CAM Data[1736]	23096	27326	31556	35786	40016	44246	48476	52706
CAM Data[1737]	23098	27328	31558	35788	40018	44248	48478	52708
CAM Data[1738]	23100	27330	31560	35790	40020	44250	48480	52710
CAM Data[1739]	23102	27332	31562	35792	40022	44252	48482	52712
CAM Data[1740]	23104	27334	31564	35794	40024	44254	48484	52714
CAM Data[1741]	23106	27336	31566	35796	40026	44256	48486	52716

	Block 1	Block 2	Block 3	Block 4	Block 5	Block 6	Block 7	Block 8
CAM Data[1742]	23108	27338	31568	35798	40028	44258	48488	52718
CAM Data[1743]	23110	27340	31570	35800	40030	44260	48490	52720
CAM Data[1744]	23112	27342	31572	35802	40032	44262	48492	52722
CAM Data[1745]	23114	27344	31574	35804	40034	44264	48494	52724
CAM Data[1746]	23116	27346	31576	35806	40036	44266	48496	52726
CAM Data[1747]	23118	27348	31578	35808	40038	44268	48498	52728
CAM Data[1748]	23120	27350	31580	35810	40040	44270	48500	52730
CAM Data[1749]	23122	27352	31582	35812	40042	44272	48502	52732
CAM Data[1750]	23124	27354	31584	35814	40044	44274	48504	52734
CAM Data[1751]	23126	27356	31586	35816	40046	44276	48506	52736
CAM Data[1752]	23128	27358	31588	35818	40048	44278	48508	52738
CAM Data[1753]	23130	27360	31590	35820	40050	44280	48510	52740
CAM Data[1754]	23132	27362	31592	35822	40052	44282	48512	52742
CAM Data[1755]	23134	27364	31594	35824	40054	44284	48514	52744
CAM Data[1756]	23136	27366	31596	35826	40056	44286	48516	52746
CAM Data[1757]	23138	27368	31598	35828	40058	44288	48518	52748
CAM Data[1758]	23140	27370	31600	35830	40060	44290	48520	52750
CAM Data[1759]	23142	27372	31602	35832	40062	44292	48522	52752
CAM Data[1760]	23144	27374	31604	35834	40064	44294	48524	52754
CAM Data[1761]	23146	27376	31606	35836	40066	44296	48526	52756
CAM Data[1762]	23148	27378	31608	35838	40068	44298	48528	52758
CAM Data[1763]	23150	27380	31610	35840	40070	44300	48530	52760
CAM Data[1764]	23152	27382	31612	35842	40072	44302	48532	52762
CAM Data[1765]	23154	27384	31614	35844	40074	44304	48534	52764
CAM Data[1766]	23156	27386	31616	35846	40076	44306	48536	52766
CAM Data[1767]	23158	27388	31618	35848	40078	44308	48538	52768
CAM Data[1768]	23160	27390	31620	35850	40080	44310	48540	52770
CAM Data[1769]	23162	27392	31622	35852	40082	44312	48542	52772
CAM Data[1770]	23164	27394	31624	35854	40084	44314	48544	52774
CAM Data[1771]	23166	27396	31626	35856	40086	44316	48546	52776
CAM Data[1772]	23168	27398	31628	35858	40088	44318	48548	52778
CAM Data[1773]	23170	27400	31630	35860	40090	44320	48550	52780
CAM Data[1774]	23172	27402	31632	35862	40092	44322	48552	52782
CAM Data[1775]	23174	27404	31634	35864	40094	44324	48554	52784
CAM Data[1776]	23176	27406	31636	35866	40096	44326	48556	52786
CAM Data[1777]	23178	27408	31638	35868	40098	44328	48558	52788
CAM Data[1778]	23180	27410	31640	35870	40100	44330	48560	52790
CAM Data[1779]	23182	27412	31642	35872	40102	44332	48562	52792
CAM Data[1780]	23184	27414	31644	35874	40104	44334	48564	52794
CAM Data[1781]	23186	27416	31646	35876	40106	44336	48566	52796
CAM Data[1782]	23188	27418	31648	35878	40108	44338	48568	52798
CAM Data[1783]	23190	27420	31650	35880	40110	44340	48570	52800
CAM Data[1784]	23192	27422	31652	35882	40112	44342	48572	52802
CAM Data[1785]	23194	27424	31654	35884	40114	44344	48574	52804
CAM Data[1786]	23196	27426	31656	35886	40116	44346	48576	52806
CAM Data[1787]	23198	27428	31658	35888	40118	44348	48578	52808
CAM Data[1788]	23200	27430	31660	35890	40120	44350	48580	52810

	Block 1	Block 2	Block 3	Block 4	Block 5	Block 6	Block 7	Block 8
CAM Data[1789]	23202	27432	31662	35892	40122	44352	48582	52812
CAM Data[1790]	23204	27434	31664	35894	40124	44354	48584	52814
CAM Data[1791]	23206	27436	31666	35896	40126	44356	48586	52816
CAM Data[1792]	23208	27438	31668	35898	40128	44358	48588	52818
CAM Data[1793]	23210	27440	31670	35900	40130	44360	48590	52820
CAM Data[1794]	23212	27442	31672	35902	40132	44362	48592	52822
CAM Data[1795]	23214	27444	31674	35904	40134	44364	48594	52824
CAM Data[1796]	23216	27446	31676	35906	40136	44366	48596	52826
CAM Data[1797]	23218	27448	31678	35908	40138	44368	48598	52828
CAM Data[1798]	23220	27450	31680	35910	40140	44370	48600	52830
CAM Data[1799]	23222	27452	31682	35912	40142	44372	48602	52832
CAM Data[1800]	23224	27454	31684	35914	40144	44374	48604	52834
CAM Data[1801]	23226	27456	31686	35916	40146	44376	48606	52836
CAM Data[1802]	23228	27458	31688	35918	40148	44378	48608	52838
CAM Data[1803]	23230	27460	31690	35920	40150	44380	48610	52840
CAM Data[1804]	23232	27462	31692	35922	40152	44382	48612	52842
CAM Data[1805]	23234	27464	31694	35924	40154	44384	48614	52844
CAM Data[1806]	23236	27466	31696	35926	40156	44386	48616	52846
CAM Data[1807]	23238	27468	31698	35928	40158	44388	48618	52848
CAM Data[1808]	23240	27470	31700	35930	40160	44390	48620	52850
CAM Data[1809]	23242	27472	31702	35932	40162	44392	48622	52852
CAM Data[1810]	23244	27474	31704	35934	40164	44394	48624	52854
CAM Data[1811]	23246	27476	31706	35936	40166	44396	48626	52856
CAM Data[1812]	23248	27478	31708	35938	40168	44398	48628	52858
CAM Data[1813]	23250	27480	31710	35940	40170	44400	48630	52860
CAM Data[1814]	23252	27482	31712	35942	40172	44402	48632	52862
CAM Data[1815]	23254	27484	31714	35944	40174	44404	48634	52864
CAM Data[1816]	23256	27486	31716	35946	40176	44406	48636	52866
CAM Data[1817]	23258	27488	31718	35948	40178	44408	48638	52868
CAM Data[1818]	23260	27490	31720	35950	40180	44410	48640	52870
CAM Data[1819]	23262	27492	31722	35952	40182	44412	48642	52872
CAM Data[1820]	23264	27494	31724	35954	40184	44414	48644	52874
CAM Data[1821]	23266	27496	31726	35956	40186	44416	48646	52876
CAM Data[1822]	23268	27498	31728	35958	40188	44418	48648	52878
CAM Data[1823]	23270	27500	31730	35960	40190	44420	48650	52880
CAM Data[1824]	23272	27502	31732	35962	40192	44422	48652	52882
CAM Data[1825]	23274	27504	31734	35964	40194	44424	48654	52884
CAM Data[1826]	23276	27506	31736	35966	40196	44426	48656	52886
CAM Data[1827]	23278	27508	31738	35968	40198	44428	48658	52888
CAM Data[1828]	23280	27510	31740	35970	40200	44430	48660	52890
CAM Data[1829]	23282	27512	31742	35972	40202	44432	48662	52892
CAM Data[1830]	23284	27514	31744	35974	40204	44434	48664	52894
CAM Data[1831]	23286	27516	31746	35976	40206	44436	48666	52896
CAM Data[1832]	23288	27518	31748	35978	40208	44438	48668	52898
CAM Data[1833]	23290	27520	31750	35980	40210	44440	48670	52900
CAM Data[1834]	23292	27522	31752	35982	40212	44442	48672	52902
CAM Data[1835]	23294	27524	31754	35984	40214	44444	48674	52904

	Block 1	Block 2	Block 3	Block 4	Block 5	Block 6	Block 7	Block 8
CAM Data[1836]	23296	27526	31756	35986	40216	44446	48676	52906
CAM Data[1837]	23298	27528	31758	35988	40218	44448	48678	52908
CAM Data[1838]	23300	27530	31760	35990	40220	44450	48680	52910
CAM Data[1839]	23302	27532	31762	35992	40222	44452	48682	52912
CAM Data[1840]	23304	27534	31764	35994	40224	44454	48684	52914
CAM Data[1841]	23306	27536	31766	35996	40226	44456	48686	52916
CAM Data[1842]	23308	27538	31768	35998	40228	44458	48688	52918
CAM Data[1843]	23310	27540	31770	36000	40230	44460	48690	52920
CAM Data[1844]	23312	27542	31772	36002	40232	44462	48692	52922
CAM Data[1845]	23314	27544	31774	36004	40234	44464	48694	52924
CAM Data[1846]	23316	27546	31776	36006	40236	44466	48696	52926
CAM Data[1847]	23318	27548	31778	36008	40238	44468	48698	52928
CAM Data[1848]	23320	27550	31780	36010	40240	44470	48700	52930
CAM Data[1849]	23322	27552	31782	36012	40242	44472	48702	52932
CAM Data[1850]	23324	27554	31784	36014	40244	44474	48704	52934
CAM Data[1851]	23326	27556	31786	36016	40246	44476	48706	52936
CAM Data[1852]	23328	27558	31788	36018	40248	44478	48708	52938
CAM Data[1853]	23330	27560	31790	36020	40250	44480	48710	52940
CAM Data[1854]	23332	27562	31792	36022	40252	44482	48712	52942
CAM Data[1855]	23334	27564	31794	36024	40254	44484	48714	52944
CAM Data[1856]	23336	27566	31796	36026	40256	44486	48716	52946
CAM Data[1857]	23338	27568	31798	36028	40258	44488	48718	52948
CAM Data[1858]	23340	27570	31800	36030	40260	44490	48720	52950
CAM Data[1859]	23342	27572	31802	36032	40262	44492	48722	52952
CAM Data[1860]	23344	27574	31804	36034	40264	44494	48724	52954
CAM Data[1861]	23346	27576	31806	36036	40266	44496	48726	52956
CAM Data[1862]	23348	27578	31808	36038	40268	44498	48728	52958
CAM Data[1863]	23350	27580	31810	36040	40270	44500	48730	52960
CAM Data[1864]	23352	27582	31812	36042	40272	44502	48732	52962
CAM Data[1865]	23354	27584	31814	36044	40274	44504	48734	52964
CAM Data[1866]	23356	27586	31816	36046	40276	44506	48736	52966
CAM Data[1867]	23358	27588	31818	36048	40278	44508	48738	52968
CAM Data[1868]	23360	27590	31820	36050	40280	44510	48740	52970
CAM Data[1869]	23362	27592	31822	36052	40282	44512	48742	52972
CAM Data[1870]	23364	27594	31824	36054	40284	44514	48744	52974
CAM Data[1871]	23366	27596	31826	36056	40286	44516	48746	52976
CAM Data[1872]	23368	27598	31828	36058	40288	44518	48748	52978
CAM Data[1873]	23370	27600	31830	36060	40290	44520	48750	52980
CAM Data[1874]	23372	27602	31832	36062	40292	44522	48752	52982
CAM Data[1875]	23374	27604	31834	36064	40294	44524	48754	52984
CAM Data[1876]	23376	27606	31836	36066	40296	44526	48756	52986
CAM Data[1877]	23378	27608	31838	36068	40298	44528	48758	52988
CAM Data[1878]	23380	27610	31840	36070	40300	44530	48760	52990
CAM Data[1879]	23382	27612	31842	36072	40302	44532	48762	52992
CAM Data[1880]	23384	27614	31844	36074	40304	44534	48764	52994
CAM Data[1881]	23386	27616	31846	36076	40306	44536	48766	52996
CAM Data[1882]	23388	27618	31848	36078	40308	44538	48768	52998

	Block 1	Block 2	Block 3	Block 4	Block 5	Block 6	Block 7	Block 8
CAM Data[1883]	23390	27620	31850	36080	40310	44540	48770	53000
CAM Data[1884]	23392	27622	31852	36082	40312	44542	48772	53002
CAM Data[1885]	23394	27624	31854	36084	40314	44544	48774	53004
CAM Data[1886]	23396	27626	31856	36086	40316	44546	48776	53006
CAM Data[1887]	23398	27628	31858	36088	40318	44548	48778	53008
CAM Data[1888]	23400	27630	31860	36090	40320	44550	48780	53010
CAM Data[1889]	23402	27632	31862	36092	40322	44552	48782	53012
CAM Data[1890]	23404	27634	31864	36094	40324	44554	48784	53014
CAM Data[1891]	23406	27636	31866	36096	40326	44556	48786	53016
CAM Data[1892]	23408	27638	31868	36098	40328	44558	48788	53018
CAM Data[1893]	23410	27640	31870	36100	40330	44560	48790	53020
CAM Data[1894]	23412	27642	31872	36102	40332	44562	48792	53022
CAM Data[1895]	23414	27644	31874	36104	40334	44564	48794	53024
CAM Data[1896]	23416	27646	31876	36106	40336	44566	48796	53026
CAM Data[1897]	23418	27648	31878	36108	40338	44568	48798	53028
CAM Data[1898]	23420	27650	31880	36110	40340	44570	48800	53030
CAM Data[1899]	23422	27652	31882	36112	40342	44572	48802	53032
CAM Data[1900]	23424	27654	31884	36114	40344	44574	48804	53034
CAM Data[1901]	23426	27656	31886	36116	40346	44576	48806	53036
CAM Data[1902]	23428	27658	31888	36118	40348	44578	48808	53038
CAM Data[1903]	23430	27660	31890	36120	40350	44580	48810	53040
CAM Data[1904]	23432	27662	31892	36122	40352	44582	48812	53042
CAM Data[1905]	23434	27664	31894	36124	40354	44584	48814	53044
CAM Data[1906]	23436	27666	31896	36126	40356	44586	48816	53046
CAM Data[1907]	23438	27668	31898	36128	40358	44588	48818	53048
CAM Data[1908]	23440	27670	31900	36130	40360	44590	48820	53050
CAM Data[1909]	23442	27672	31902	36132	40362	44592	48822	53052
CAM Data[1910]	23444	27674	31904	36134	40364	44594	48824	53054
CAM Data[1911]	23446	27676	31906	36136	40366	44596	48826	53056
CAM Data[1912]	23448	27678	31908	36138	40368	44598	48828	53058
CAM Data[1913]	23450	27680	31910	36140	40370	44600	48830	53060
CAM Data[1914]	23452	27682	31912	36142	40372	44602	48832	53062
CAM Data[1915]	23454	27684	31914	36144	40374	44604	48834	53064
CAM Data[1916]	23456	27686	31916	36146	40376	44606	48836	53066
CAM Data[1917]	23458	27688	31918	36148	40378	44608	48838	53068
CAM Data[1918]	23460	27690	31920	36150	40380	44610	48840	53070
CAM Data[1919]	23462	27692	31922	36152	40382	44612	48842	53072
CAM Data[1920]	23464	27694	31924	36154	40384	44614	48844	53074
CAM Data[1921]	23466	27696	31926	36156	40386	44616	48846	53076
CAM Data[1922]	23468	27698	31928	36158	40388	44618	48848	53078
CAM Data[1923]	23470	27700	31930	36160	40390	44620	48850	53080
CAM Data[1924]	23472	27702	31932	36162	40392	44622	48852	53082
CAM Data[1925]	23474	27704	31934	36164	40394	44624	48854	53084
CAM Data[1926]	23476	27706	31936	36166	40396	44626	48856	53086
CAM Data[1927]	23478	27708	31938	36168	40398	44628	48858	53088
CAM Data[1928]	23480	27710	31940	36170	40400	44630	48860	53090
CAM Data[1929]	23482	27712	31942	36172	40402	44632	48862	53092

	Block 1	Block 2	Block 3	Block 4	Block 5	Block 6	Block 7	Block 8
CAM Data[1930]	23484	27714	31944	36174	40404	44634	48864	53094
CAM Data[1931]	23486	27716	31946	36176	40406	44636	48866	53096
CAM Data[1932]	23488	27718	31948	36178	40408	44638	48868	53098
CAM Data[1933]	23490	27720	31950	36180	40410	44640	48870	53100
CAM Data[1934]	23492	27722	31952	36182	40412	44642	48872	53102
CAM Data[1935]	23494	27724	31954	36184	40414	44644	48874	53104
CAM Data[1936]	23496	27726	31956	36186	40416	44646	48876	53106
CAM Data[1937]	23498	27728	31958	36188	40418	44648	48878	53108
CAM Data[1938]	23500	27730	31960	36190	40420	44650	48880	53110
CAM Data[1939]	23502	27732	31962	36192	40422	44652	48882	53112
CAM Data[1940]	23504	27734	31964	36194	40424	44654	48884	53114
CAM Data[1941]	23506	27736	31966	36196	40426	44656	48886	53116
CAM Data[1942]	23508	27738	31968	36198	40428	44658	48888	53118
CAM Data[1943]	23510	27740	31970	36200	40430	44660	48890	53120
CAM Data[1944]	23512	27742	31972	36202	40432	44662	48892	53122
CAM Data[1945]	23514	27744	31974	36204	40434	44664	48894	53124
CAM Data[1946]	23516	27746	31976	36206	40436	44666	48896	53126
CAM Data[1947]	23518	27748	31978	36208	40438	44668	48898	53128
CAM Data[1948]	23520	27750	31980	36210	40440	44670	48900	53130
CAM Data[1949]	23522	27752	31982	36212	40442	44672	48902	53132
CAM Data[1950]	23524	27754	31984	36214	40444	44674	48904	53134
CAM Data[1951]	23526	27756	31986	36216	40446	44676	48906	53136
CAM Data[1952]	23528	27758	31988	36218	40448	44678	48908	53138
CAM Data[1953]	23530	27760	31990	36220	40450	44680	48910	53140
CAM Data[1954]	23532	27762	31992	36222	40452	44682	48912	53142
CAM Data[1955]	23534	27764	31994	36224	40454	44684	48914	53144
CAM Data[1956]	23536	27766	31996	36226	40456	44686	48916	53146
CAM Data[1957]	23538	27768	31998	36228	40458	44688	48918	53148
CAM Data[1958]	23540	27770	32000	36230	40460	44690	48920	53150
CAM Data[1959]	23542	27772	32002	36232	40462	44692	48922	53152
CAM Data[1960]	23544	27774	32004	36234	40464	44694	48924	53154
CAM Data[1961]	23546	27776	32006	36236	40466	44696	48926	53156
CAM Data[1962]	23548	27778	32008	36238	40468	44698	48928	53158
CAM Data[1963]	23550	27780	32010	36240	40470	44700	48930	53160
CAM Data[1964]	23552	27782	32012	36242	40472	44702	48932	53162
CAM Data[1965]	23554	27784	32014	36244	40474	44704	48934	53164
CAM Data[1966]	23556	27786	32016	36246	40476	44706	48936	53166
CAM Data[1967]	23558	27788	32018	36248	40478	44708	48938	53168
CAM Data[1968]	23560	27790	32020	36250	40480	44710	48940	53170
CAM Data[1969]	23562	27792	32022	36252	40482	44712	48942	53172
CAM Data[1970]	23564	27794	32024	36254	40484	44714	48944	53174
CAM Data[1971]	23566	27796	32026	36256	40486	44716	48946	53176
CAM Data[1972]	23568	27798	32028	36258	40488	44718	48948	53178
CAM Data[1973]	23570	27800	32030	36260	40490	44720	48950	53180
CAM Data[1974]	23572	27802	32032	36262	40492	44722	48952	53182
CAM Data[1975]	23574	27804	32034	36264	40494	44724	48954	53184
CAM Data[1976]	23576	27806	32036	36266	40496	44726	48956	53186

	Block 1	Block 2	Block 3	Block 4	Block 5	Block 6	Block 7	Block 8
CAM Data[1977]	23578	27808	32038	36268	40498	44728	48958	53188
CAM Data[1978]	23580	27810	32040	36270	40500	44730	48960	53190
CAM Data[1979]	23582	27812	32042	36272	40502	44732	48962	53192
CAM Data[1980]	23584	27814	32044	36274	40504	44734	48964	53194
CAM Data[1981]	23586	27816	32046	36276	40506	44736	48966	53196
CAM Data[1982]	23588	27818	32048	36278	40508	44738	48968	53198
CAM Data[1983]	23590	27820	32050	36280	40510	44740	48970	53200
CAM Data[1984]	23592	27822	32052	36282	40512	44742	48972	53202
CAM Data[1985]	23594	27824	32054	36284	40514	44744	48974	53204
CAM Data[1986]	23596	27826	32056	36286	40516	44746	48976	53206
CAM Data[1987]	23598	27828	32058	36288	40518	44748	48978	53208
CAM Data[1988]	23600	27830	32060	36290	40520	44750	48980	53210
CAM Data[1989]	23602	27832	32062	36292	40522	44752	48982	53212
CAM Data[1990]	23604	27834	32064	36294	40524	44754	48984	53214
CAM Data[1991]	23606	27836	32066	36296	40526	44756	48986	53216
CAM Data[1992]	23608	27838	32068	36298	40528	44758	48988	53218
CAM Data[1993]	23610	27840	32070	36300	40530	44760	48990	53220
CAM Data[1994]	23612	27842	32072	36302	40532	44762	48992	53222
CAM Data[1995]	23614	27844	32074	36304	40534	44764	48994	53224
CAM Data[1996]	23616	27846	32076	36306	40536	44766	48996	53226
CAM Data[1997]	23618	27848	32078	36308	40538	44768	48998	53228
CAM Data[1998]	23620	27850	32080	36310	40540	44770	49000	53230
CAM Data[1999]	23622	27852	32082	36312	40542	44772	49002	53232
CAM Data[2000]	23624	27854	32084	36314	40544	44774	49004	53234
CAM Data[2001]	23626	27856	32086	36316	40546	44776	49006	53236
CAM Data[2002]	23628	27858	32088	36318	40548	44778	49008	53238
CAM Data[2003]	23630	27860	32090	36320	40550	44780	49010	53240
CAM Data[2004]	23632	27862	32092	36322	40552	44782	49012	53242
CAM Data[2005]	23634	27864	32094	36324	40554	44784	49014	53244
CAM Data[2006]	23636	27866	32096	36326	40556	44786	49016	53246
CAM Data[2007]	23638	27868	32098	36328	40558	44788	49018	53248
CAM Data[2008]	23640	27870	32100	36330	40560	44790	49020	53250
CAM Data[2009]	23642	27872	32102	36332	40562	44792	49022	53252
CAM Data[2010]	23644	27874	32104	36334	40564	44794	49024	53254
CAM Data[2011]	23646	27876	32106	36336	40566	44796	49026	53256
CAM Data[2012]	23648	27878	32108	36338	40568	44798	49028	53258
CAM Data[2013]	23650	27880	32110	36340	40570	44800	49030	53260
CAM Data[2014]	23652	27882	32112	36342	40572	44802	49032	53262
CAM Data[2015]	23654	27884	32114	36344	40574	44804	49034	53264
CAM Data[2016]	23656	27886	32116	36346	40576	44806	49036	53266
CAM Data[2017]	23658	27888	32118	36348	40578	44808	49038	53268
CAM Data[2018]	23660	27890	32120	36350	40580	44810	49040	53270
CAM Data[2019]	23662	27892	32122	36352	40582	44812	49042	53272
CAM Data[2020]	23664	27894	32124	36354	40584	44814	49044	53274
CAM Data[2021]	23666	27896	32126	36356	40586	44816	49046	53276
CAM Data[2022]	23668	27898	32128	36358	40588	44818	49048	53278
CAM Data[2023]	23670	27900	32130	36360	40590	44820	49050	53280

	Block 1	Block 2	Block 3	Block 4	Block 5	Block 6	Block 7	Block 8
CAM Data[2024]	23672	27902	32132	36362	40592	44822	49052	53282
CAM Data[2025]	23674	27904	32134	36364	40594	44824	49054	53284
CAM Data[2026]	23676	27906	32136	36366	40596	44826	49056	53286
CAM Data[2027]	23678	27908	32138	36368	40598	44828	49058	53288
CAM Data[2028]	23680	27910	32140	36370	40600	44830	49060	53290
CAM Data[2029]	23682	27912	32142	36372	40602	44832	49062	53292
CAM Data[2030]	23684	27914	32144	36374	40604	44834	49064	53294
CAM Data[2031]	23686	27916	32146	36376	40606	44836	49066	53296
CAM Data[2032]	23688	27918	32148	36378	40608	44838	49068	53298
CAM Data[2033]	23690	27920	32150	36380	40610	44840	49070	53300
CAM Data[2034]	23692	27922	32152	36382	40612	44842	49072	53302
CAM Data[2035]	23694	27924	32154	36384	40614	44844	49074	53304
CAM Data[2036]	23696	27926	32156	36386	40616	44846	49076	53306
CAM Data[2037]	23698	27928	32158	36388	40618	44848	49078	53308
CAM Data[2038]	23700	27930	32160	36390	40620	44850	49080	53310
CAM Data[2039]	23702	27932	32162	36392	40622	44852	49082	53312
CAM Data[2040]	23704	27934	32164	36394	40624	44854	49084	53314
CAM Data[2041]	23706	27936	32166	36396	40626	44856	49086	53316
CAM Data[2042]	23708	27938	32168	36398	40628	44858	49088	53318
CAM Data[2043]	23710	27940	32170	36400	40630	44860	49090	53320
CAM Data[2044]	23712	27942	32172	36402	40632	44862	49092	53322
CAM Data[2045]	23714	27944	32174	36404	40634	44864	49094	53324
CAM Data[2046]	23716	27946	32176	36406	40636	44866	49096	53326
CAM Data[2047]	23718	27948	32178	36408	40638	44868	49098	53328

Appendix 3.7 User CAM data memory address

	Axis1	Axis2	Axis3	Axis4
Number of user CAM data	53330	53452	53574	53696
Main axis position1	53332	53454	53576	53698
Sub axis position1	53334	53456	53578	53700
Main axis position 2	53336	53458	53580	53702
Sub axis position 2	53338	53460	53582	53704
Main axis position 3	53340	53462	53584	53706
Sub axis position 3	53342	53464	53586	53708
Main axis position 4	53344	53466	53588	53710
Sub axis position 4	53346	53468	53590	53712
Main axis position 5	53348	53470	53592	53714
Sub axis position 5	53350	53472	53594	53716
Main axis position 6	53352	53474	53596	53718
Sub axis position 6	53354	53476	53598	53720
Main axis position 7	53356	53478	53600	53722
Sub axis position 7	53358	53480	53602	53724
Main axis position 8	53360	53482	53604	53726
Sub axis position 8	53362	53484	53606	53728
Main axis position 9	53364	53486	53608	53730
Sub axis position 9	53366	53488	53610	53732
Main axis position 10	53368	53490	53612	53734
Sub axis position 10	53370	53492	53614	53736
Main axis position 11	53372	53494	53616	53738
Sub axis position 11	53374	53496	53618	53740
Main axis position 12	53376	53498	53620	53742
Sub axis position 12	53378	53500	53622	53744
Main axis position 13	53380	53502	53624	53746
Sub axis position 13	53382	53504	53626	53748
Main axis position 14	53384	53506	53628	53750
Sub axis position 14	53386	53508	53630	53752
Main axis position 15	53388	53510	53632	53754
Sub axis position 15	53390	53512	53634	53756
Main axis position 16	53392	53514	53636	53758
Sub axis position 16	53394	53516	53638	53760
Main axis position 17	53396	53518	53640	53762
Sub axis position 17	53398	53520	53642	53764
Main axis position 18	53400	53522	53644	53766
Sub axis position 18	53402	53524	53646	53768
Main axis position 19	53404	53526	53648	53770
Sub axis position 19	53406	53528	53650	53772

Main axis position 20	53408	53530	53652	53774
Sub axis position 20	53410	53532	53654	53776
Main axis position 21	53412	53534	53656	53778
Sub axis position 21	53414	53536	53658	53780
Main axis position 22	53416	53538	53660	53782
Sub axis position 22	53418	53540	53662	53784
Main axis position 23	53420	53542	53664	53786
Sub axis position 23	53422	53544	53666	53788
Main axis position 24	53424	53546	53668	53790
Sub axis position 24	53426	53548	53670	53792
Main axis position 25	53428	53550	53672	53794
Sub axis position 25	53430	53552	53674	53796
Main axis position 26	53432	53554	53676	53798
Sub axis position 26	53434	53556	53678	53800
Main axis position 27	53436	53558	53680	53802
Sub axis position 27	53438	53560	53682	53804
Main axis position 28	53440	53562	53684	53806
Sub axis position 28	53442	53564	53686	53808
Main axis position 29	53444	53566	53688	53810
Sub axis position 29	53446	53568	53690	53812
Main axis position 30	53448	53570	53692	53814
Sub axis position 30	53450	53572	53694	53816

LS values every single customers.

Quality and service come first at LSIS.

Always at your service, standing for our customers.

http://eng.lsis.biz

LS Industrial Systems

10310000977

■ ***HEAD OFFICE***
LS tower, Hogye-dong, Dongan-gu, Anyang-si, Gyeonggi-do 1026-6,
Korea http://eng.lsis.biz
Tel : (82-2)2034-4870/Fax : 82-2-2034-4648 e-mail : cshwang@lsis.biz

■ ***LS Industrial Systems Tokyo Office _ Tokyo, Japan***
Address: 16FL. Higashi-Kan. Akasaka Twin Tower 17-22,
Akasaka.Monato-ku Tokyo 107-8470. Japan
Tel : 81-3-3582-9128/Fax : 81-3-3582-2667 e-mail : jschuna@lsis.biz

■ ***LS Industrial Systems(ME) FZE _ Dubai, U.A.E.***
Address : Jafza View Tower Lob 19, Room 205 Along Sheikh Zayed
Road Jebel Aali Free Zone Dubai, United Arab Emirates
Tel : 971-4-886-5360/Fax : 971-4-886-5361 e-mail : jungyongl@lsis.biz

■ ***LS Industrial Systems Shanghai Office _ Shanghai, China***
Address : Room E-G. 12FL Hiamin Empire Plaza. No.726. West.
Yan'an Road Shanghai 200050. P.R. China e-mail : liyong@lsis.com.cn
Tel : 86-21-5237-9977(609)/Fax : 89-21-5237-7189

■ ***LS Industrial Systems Beijing Office _ Beijing, China***
Address : B-Tower 17FL. Beijing Global Trade Center B/D. No. 36.
East BeisanHuan-Road. DongCheng-District. Beijing 100013. P.R. China
Tel : 86-10-5825-6027(666)/Fax : 86-10-5825-6028 e-mail : xunmj@lsis.com.cn

■ ***LS Industrial Systems Guangzhou Office _ Guangzhou, China***
Address : Room 1403.14FL. New Poly Tower.
2 Zhongshan Liu Road.Guangzhou.P.R China
Tel : 86-20-8328-6754/Fax : 86-20-8326-6287 e-mail : chenxs@lsis.com.cn

■ ***LS Industrial Systems Chengdu Office _ Chengdu, China***
Address : 12FL. Guodong Buiding. No.52 Jindun
Road Chengdu.610041. P.R. China
Tel : 86-28-8612-9151(9226)/Fax : 86-28-8612-9236 e-mail : comysb@lsis.biz

■ ***LS Industrial Systems Qingdao Office _ Qingdao, China***
Address : YinHe Bldg. 402 Room No. 2P Shandong Road,
Qingdao-City,Shandong-province 266071, P.R. China
Tel : 86-532-8501-6068/Fax : 86-532-8501-6057 e-mail : wangzy@lsis.com.cn

■ ***LS Industrial Systems Europe B.V. , Netherlands***
Address : 1st. Floor, Tupolevlaan 48, 1119NZ, Schiphol-Rijk, The Netherlands
Tel : +31 (0)20 654 1420/Fax : +31 (0)20 654 1429 e-mail : junshickp@lsis.biz

■ ***Wuxi LS Industrial Systems Co., Ltd _ Wuxi, China***
Address : 102-A. National High & New Tech Industrial Development Area.
Wuxi. Jiangsu. 214028. P.R. China
Tel : 86-510-8534-6666/Fax : 86-510-8534-4078 e-mail : caidx@lsis.com.cn

■ ***Dalian LS Industrial Systems Co., Ltd. _ Dalian, China***
Address : No. 15. Liaohexi 3-Road. Economic and Technical Development zone.
Dalian 116600. China
Tel : 86-411-273-7777/Fax : 86-411-8730-7560 e-mail : cuibx@lsis.com.cn

※ LS Industrial Systems constantly endeavors to improve its product so that information in this manual is subject to change without notice.

ⓒ LSIS Co., Ltd 2010 All Rights Reserved.

2013. 3